DORMER

目录
Catálogo
Catalogue

2018

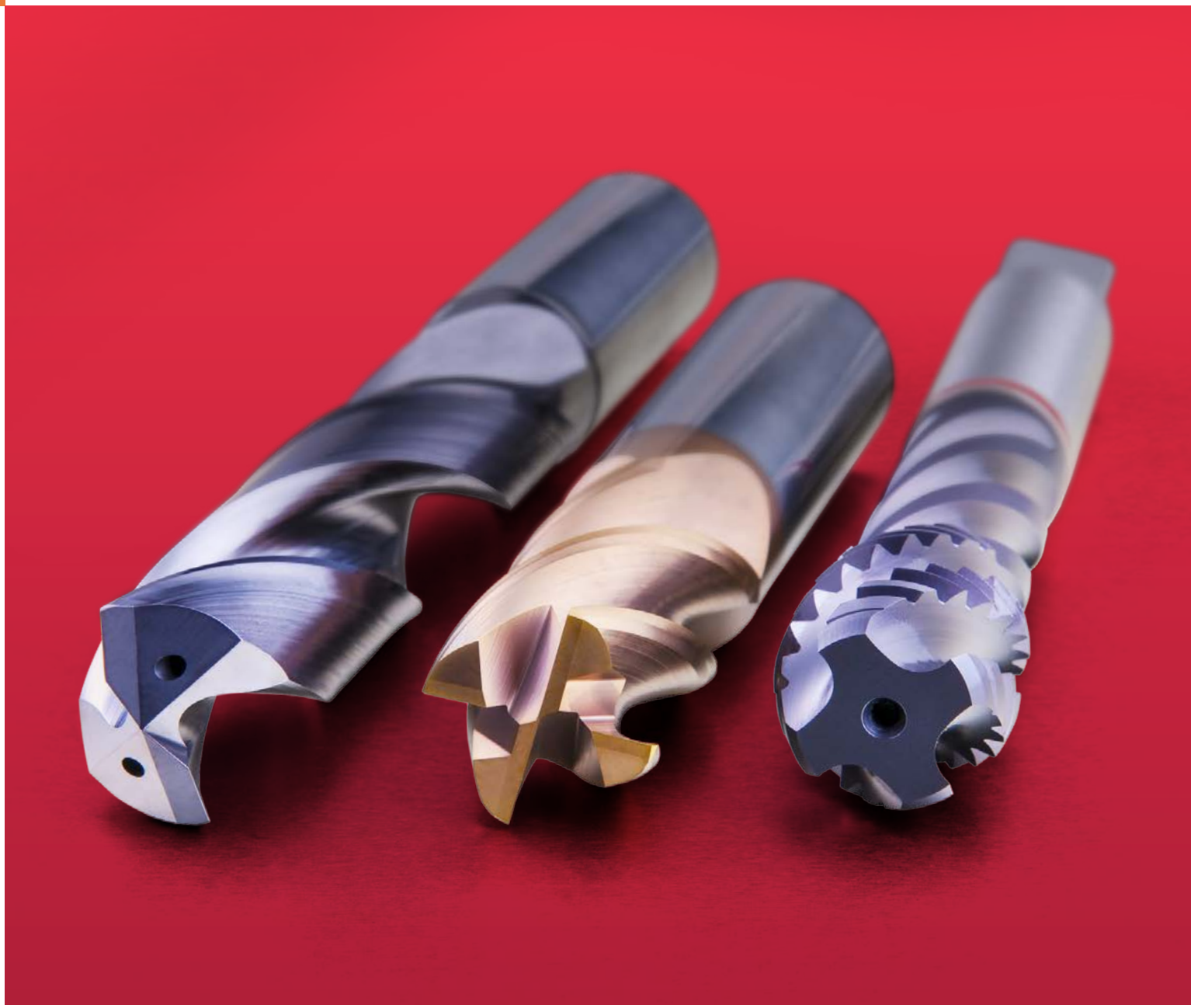

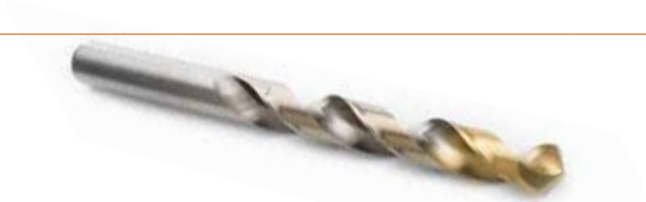

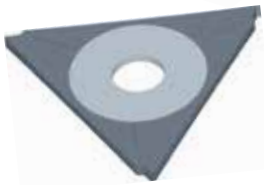

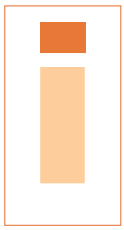

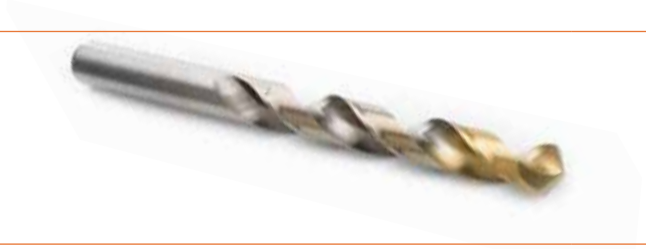

DORMER

	材料	Material	Material	Material
	标准	Norma	Estándar	Standard
	深度	Profundidade	Profundidad	Depth
	顶角	Ângulo de Ponta	º de la punta	Point Angle
	涂层	Tratamento	Tratamiento superficial	Coating
	柄部	Haste	Mango	Shank
	加工方向	Direção	Dirección	Direction
	冷却	Refrigeração	Refrigeración	Coolant
■	性能卓越	Excelente para a Aplicação	Excelente para Aplicación	Excellent for Application
●	性能良好	Bom para a Aplicação	Bueno para Aplicación	Good for Application
	实例 10 = 外缘处的切削速度，米/分，+/- 10%	Exemplo 10 = Velocidade periférica em metros/minuto +/- 10%	Ejemplo 10 = Velocidad Periférica en metros/minuto +/- 10%	Example 10 = Peripheral speed in metres/minute +/- 10%
	产品型号	Código	Código de producto	Product Codes
	尺寸范围	Gama de medidas	Rango de Diámetros	Size Range

AMG	中文	Português	Español	English
1.1	铁磁性低碳钢	Aço macio magnético	Acero blando	Magnetic soft steel
1.2	结构钢, 表面渗碳钢	Aço estrutural, Aço cementado	Acero de construcción/cementación	Structural steel, case carburizing steel
1.3	普通碳钢	Aço-carbono	Acero al carbono	Plain Carbon steel
1.4	合金钢	Aço de liga	Acero aleado	Alloy steel
1.5	合金钢, 淬火回火钢	Aço de liga, Aço temperado	Acero aleado/temple y revenido	Alloy steel, Hardened and tempered steel
1.6	合金钢, 淬火回火钢	Aço de liga, Aço temperado	Acero aleado/temple y revenido	Alloy steel, Hardened and tempered steel
1.7	热处理合金钢	Aço de liga temperado	Acero aleado cementado	Alloy steel, Heat treated
1.8	淬火合金钢, 耐磨钢	Aço de liga temperado	Acero aleado cementado	Alloy steel, Hardened & Wear resistant steel
2.1	易切削不锈钢	Aço inoxidável de maquinagem fácil	Acero inoxidable fácil mecanizado	Free machining, Stainless Steel
2.2	奥氏体不锈钢	Austenítico	Austenítico	Austenitic
2.3	铁素体 + 奥氏体, 马氏体不锈钢	Ferrítico + Austenítico + Martensítico	Ferritico, Ferr. + Aust., Marten	Ferritic + Austenitic, Ferritic, Martensitic
2.4	沉淀硬化不锈钢	Aço inoxidável de fácil usinagem	Acero Inoxidable Templado	Precipitation Hardened
3.1	灰铸铁	Grafite laminar	Con grafito laminar	Lamellar graphite
3.2	灰铸铁	Grafite laminar	Con grafito laminar	Lamellar graphite
3.3	球墨铸铁, 可锻铸铁	Grafite nodular/ Ferro fundido maleável	Con graf. laminar, fundic. maleable	Nodular graphite, Malleable Cast Iron
3.4	球墨铸铁, 可锻铸铁	Grafite nodular/ Ferro fundido maleável	Con graf. laminar, fundic. maleable	Nodular graphite, Malleable Cast Iron
4.1	纯钛	Titânio, sem liga	Titanio no aleado	Titanium, unalloyed
4.2	钛合金	Titânio, com liga	Titanio aleado	Titanium, alloyed
4.3	钛合金	Titânio, com liga	Titanio aleado	Titanium, alloyed
5.1	纯镍	Níquel, sem liga	Níquel no aleado	Nickel, unalloyed
5.2	镍合金	Níquel, com liga	Níquel aleado	Nickel, alloyed
5.3	镍合金	Níquel, com liga	Níquel aleado	Nickel, alloyed
6.1	紫铜	Cobre	Cobre	Copper
6.2	β黄铜, 青铜	Latão beta, bronze	β-Latón, bronce	β-Brass, Bronze
6.3	α黄铜	Latão alfa	α-Latón	α-Brass
6.4	高强度青铜	Bronze de alta resistência	Metal AMPCO	High Strength Bronze
7.1	纯铝, 纯镁	Al, Mg, sem liga	Al, Mg, no aleado	Al, Mg, unalloyed
7.2	铝合金, 硅含量 < 0.5%	Al com liga, Si<0.5%	Al aleado con Si < 0.5%	Al alloyed, Si < 0.5%
7.3	铝合金, 硅含量 > 0.5% < 10%	Al com liga, Si>0.5%<10%	Al aleado con Si > 0.5% < 10%	Al alloyed, Si > 0.5% < 10%
7.4	铝合金, 硅含量 > 10% 晶须增强铝合金, 镁合金	Al com liga, Si>10% reforçadas com monocristais filiformes, ligas de Al/Mg	Al aleado, Si>10% Reforzado por filamentos, Al-aleados, Mg-aleados	Al alloyed, Si > 10% Whisker reinforced Al-alloys Mg-alloys
8.1	调整字体大小, 适应排版需要	Termoplásticos	Termoplásticos	Thermoplastics
8.2	热固性塑料	Plásticos termoduros	Plásticos endurecidos por calor	Thermosetting plastics
8.3	增强塑料	Materiais plásticos reforçados	Materiales plásticos reforzados	Reinforced plastic materials
9.1	金属陶瓷	Cerametal (metalocerâmica)	Cerametales (metales-cerámicas)	Cermets (metals-ceramics)
10.1	标准石墨	Grafite standard	Grafito standard	Graphite

	HM	HM	HM	HSS	HSS	HSS			
	DORMER	DORMER	DORMER	DORMER	DORMER	DORMER			
				3XD	5XD	8XD			
	140°	140°	140°						
	Ti-plus	Ti-plus	Ti-plus						
				DIN 6535HB DIN 1835HE	DIN 6535HB DIN 1835HE	DIN 6535HE			
	R950	R960	R970	H853	H855	H858	H860	H861	
	15/32 - 42.00	15/32 - 30.50	15/32 - 42.00	12.00 - 42.50	12.00 - 42.50	14.00 - 42.50	N1 - N7	N1 - N6	
			NEW						
AMG	18	18	18	21	21	21	24	24	ISO
1.1	●110W	■110W							P 1
1.2	●100W	■100W							P 1
1.3	■100W								P 2
1.4	■85W								P 3
1.5	■85W								P 4
1.6	■60T								H 1
1.7									H 3
1.8									H 4
2.1		■60V							M 1
2.2		■50T							M 3
2.3		■40T							M 2
2.4	●35T	●35T							S 2
3.1		■120V	■120V						K 1
3.2		■116V	■116V						K 2
3.3	■88V	●88V	■80V						K 3
3.4	■88V	●88V	■80V						K 4
4.1		●45T							S 1
4.2		●35T							S 2
4.3		●30S							S 3
5.1		●35T							S 1
5.2		●30S							S 2
5.3		●25S							S 3
6.1									N 3
6.2									N 4
6.3									N 3
6.4									N 4
7.1									N 1
7.2									N 1
7.3									N 1
7.4									N 2
8.1									O
8.2									O
8.3									O
9.1									H
10.1									O

DORMER

材料	Material	Material	Material
标准	Norma	Estándar	Standard
深度	Profundidade	Profundidad	Depth
顶角	Ângulo de Ponta	º de la punta	Point Angle
涂层	Tratamento	Tratamiento superficial	Coating
柄部	Haste	Mango	Shank
形式	Forma	Forma	Form
加工方向	Direção	Dirección	Direction
冷却	Refrigeração	Refrigeración	Coolant
锪孔度数	º de Escareado	º de avellanado	Countersink º

■ 性能卓越	Excelente para a Aplicação	Excelente para Aplicación	Excellent for Application
● 性能良好	Bom para a Aplicação	Bueno para Aplicación	Good for Application
实例 10 = 外缘处的切削速度，米/分，+/- 10%	Exemplo 10 = Velocidade periférica em metros/minuto +/- 10%	Ejemplo 10 = Velocidad Periférica en metros/minuto +/- 10%	Example 10 = Peripheral speed in metres/minute +/- 10%

产品型号	Código	Código de producto	Product Codes
尺寸范围	Gama de medidas	Rango de Diámetros	Size Range

AMG	中文	Português	Español	English
1.1	铁磁性低碳钢	Aço macio magnético	Acero blando	Magnetic soft steel
1.2	结构钢, 表面渗碳钢	Aço estrutural, Aço cementado	Acero de construcción/cementación	Structural steel, case carburizing steel
1.3	普通碳钢	Aço-carbono	Acero al carbono	Plain Carbon steel
1.4	合金钢	Aço de liga	Acero aleado	Alloy steel
1.5	合金钢, 淬火回火钢	Aço de liga, Aço temperado	Acero aleado/temple y revenido	Alloy steel, Hardened and tempered steel
1.6	合金钢, 淬火回火钢	Aço de liga, Aço temperado	Acero aleado/temple y revenido	Alloy steel, Hardened and tempered steel
1.7	热处理合金钢	Aço de liga temperado	Acero aleado cementado	Alloy steel, Heat treated
1.8	淬火合金钢, 耐磨钢	Aço de liga temperado	Acero aleado cementado	Alloy steel, Hardened & Wear resistant steel
2.1	易切削不锈钢	Aço inoxidável de maquinagem fácil	Acero inoxidable fácil mecanizado	Free machining, Stainless Steel
2.2	奥氏体不锈钢	Austenítico	Austenítico	Austenitic
2.3	铁素体 + 奥氏体, 马氏体不锈钢	Ferrítico + Austenítico + Martensítico	Ferritico, Ferr. + Aust., Marten	Ferritic + Austenitic, Ferritic, Martensitic
2.4	沉淀硬化不锈钢	Aço inoxidável de fácil usinagem	Acero Inoxidable Templado	Precipitation Hardened
3.1	灰铸铁	Grafite laminar	Con grafito laminar	Lamellar graphite
3.2	灰铸铁	Grafite laminar	Con grafito laminar	Lamellar graphite
3.3	球墨铸铁, 可锻铸铁	Grafite nodular/ Ferro fundido maleável	Con graf. laminar, fundic. maleable	Nodular graphite, Malleable Cast Iron
3.4	球墨铸铁, 可锻铸铁	Grafite nodular/ Ferro fundido maleável	Con graf. laminar, fundic. maleable	Nodular graphite, Malleable Cast Iron
4.1	纯钛	Titânio, sem liga	Titanio no aleado	Titanium, unalloyed
4.2	钛合金	Titânio, com liga	Titanio aleado	Titanium, alloyed
4.3	钛合金	Titânio, com liga	Titanio aleado	Titanium, alloyed
5.1	纯镍	Níquel, sem liga	Níquel no aleado	Nickel, unalloyed
5.2	镍合金	Níquel, com liga	Níquel aleado	Nickel, alloyed
5.3	镍合金	Níquel, com liga	Níquel aleado	Nickel, alloyed
6.1	紫铜	Cobre	Cobre	Copper
6.2	β黄铜, 青铜	Latão beta, bronze	β-Latón, bronce	β-Brass, Bronze
6.3	α黄铜	Latão alfa	α-Latón	α-Brass
6.4	高强度青铜	Bronze de alta resistência	Metal AMPCO	High Strength Bronze
7.1	纯铝, 纯镁	Al, Mg, sem liga	Al, Mg, no aleado	Al, Mg, unalloyed
7.2	铝合金, 硅含量 < 0.5%	Al com liga, Si<0.5%	Al aleado con Si < 0.5%	Al alloyed, Si < 0.5%
7.3	铝合金, 硅含量 > 0.5% < 10%	Al com liga, Si>0.5%<10%	Al aleado con Si > 0.5% < 10%	Al alloyed, Si > 0.5% < 10%
7.4	铝合金, 硅含量 > 10% 晶须增强铝合金, 镁合金	Al com liga, Si>10% reforçadas com monocristais filiformes, ligas de Al/Mg	Al aleado, Si>10% Reforzado por filamentos, Al-aleados, Mg-aleados	Al alloyed, Si > 10% Whisker reinforced Al-alloys Mg-alloys
8.1	调整字体大小, 适应排版需要	Termoplásticos	Termoplásticos	Thermoplastics
8.2	热固性塑料	Plásticos termoduros	Plásticos endurecidos por calor	Thermosetting plastics
8.3	增强塑料	Materiais plásticos reforçados	Materiales plásticos reforzados	Reinforced plastic materials
9.1	金属陶瓷	Cerametal (metalocerâmica)	Cerametales (metales-cerámicas)	Cermets (metals-ceramics)
10.1	标准石墨	Grafite standard	Grafito standard	Graphite

DORMER

	HM	HM	HM	HM	HM	HM	HM	HM	HM	HM	HM	HM	HM	HM
	DIN 333A	DORMER	DORMER	DORMER	DORMER	DIN 6539	DIN 338	DIN 6539	DIN 338	DIN 6537 K	DIN 6537 K	DIN 6537 L	DIN 6537 L	DORMER
	1XD	1XD	1XD	1XD	3XD	2.5XD	4XD	2.5XD	4XD	3XD	3XD	5XD	5XD	8XD
	118°	120°	90°	90°	140°	120°	120°	130°	130°	140°	140°	140°	140°	140°
				TiAlN	TiAlN			TiN	TiN	TiAlN	TiAlN	TiAlN	TiAlN	TiAlN
				DIN 6535HA	DIN 6535HA					DIN 6535HA	DIN 6535HA	DIN 6535HA	DIN 6535HA	DIN 6535HA
		N	N	N	N	N	N	N	N					
	R200	R122	R123	R6011	R7131	R120	R100	R520	R510	R458	R457	R454	R453	R459
	1.00 - 5.00	5.00 - 20.00	5.00 - 20.00	6.00 - 16.00	3.30 - 10.40	1.00 - 12.00	1.00 - 14.00	3.00 - 16.50	3.00 - 14.25	3.00 - 20.00	3.00 - 20.00	3.00 - 20.00	3.00 - 20.00	3.00 - 16.00
	NEW			NEW	NEW					NEW	NEW	NEW	NEW	NEW
AMG	25	26	26	26	27	28	30	32	34	36	36	40	40	44
1.1	■50H	■85S	■85S	■110S	■120W	●85S	●85S	■100X	■100W	■155W	■155W	■155V	■155V	■135V
1.2	■48H	■75S	■75S	■90S	■110W	●75S	●75S	■90X	■90W	■135W	■140W	■135V	■140V	■120V
1.3	■45F	■75S	■75S	■90S	■105W	●75S	●75S	■90X	■90W	■110W	■135W	■110V	■135V	■110U
1.4	■40E	■70S	■70S	■75S	■85V	●70S	●70S	■80X	■80W	■100V	■115V	■100V	■115V	■100U
1.5	■30D	■45S	■45S	■55S	■65V	●45S	●45S	■55X	■55V	■75V	■90V	■75V	■90V	■80U
1.6	■10C	■45S	■45S	■50S		●45S	●45S	■45W	■45V	■50U	■65U	■50U	■65U	■55T
1.7		■30S	■30S	■30S		●30S	●30S	●35U	●35T	■30U	■30U	■30U	■30U	
1.8		■30S	■30S	■30S		●30S	●30S	●30T	●30S	■25U	■25U	■25U	■25U	
2.1		■53S	■53S	■60S	■45V			●50W	●50V	■45U	■55V	■45U	■55V	■75V
2.2		■45S	■45S	■50S	■40V					■40T	■35V	■40T	■35V	■35V
2.3					■35U					■35T	■30U	■35T	●30U	●30U
2.4										●35T		●35T	●30U	
3.1	■40H	■75T	■75T	■80T	■90W	●75U	●75T	■90Y	■90X	■90W	■110W	■90W	■110W	■120W
3.2	■35E	■75T	■75T	■80T	■90W	●75U	●75T	■90Y	■90X	■90W	■110W	■90W	■110W	■120W
3.3	■30D	■55T	■55T	■70T	■75V	●55U	●55T	■65X	■65W	■70V	■80V	■70V	■80V	■80V
3.4	■30D	■55T	■55T	■70T	■65V	●55U	●55T	■65X	■65W	■70V	■80V	■70V	■80V	■80V
4.1		■45T	■45T	■55T		■45T		●60W	●45V	●50U	■55V	●50U	■55V	
4.2		■35T	■35T	■45T		●35T		●45V		●40U	■45V	●40U	■45V	
4.3		■25S	■25S	■35S		●25T		●35U		●35T	■40U	●35T	■40U	
5.1		■45T	■45T	■55T		■40U		■50W	●50V					
5.2		■30S	■30S	■40S		●30T								
5.3		■20S	■20S	■30S		●20T								
6.1	■110F	■275V	■275V	■275V	■125W	■275W				■100V	■125W	■100V	■125W	●125V
6.2	■100H	■250V	■250V	■250V	■220W	●275W	■250V			■200V	■220W	■200V	■220W	●220V
6.3	■90G	■250V	■250V	■250V	■220W	●275W	■250V			■200V	■220W	■200V	■220W	●220V
6.4	■75F	■70T	■70T	■70T	■100V	●70U				●80U	■100V	●80U	■100V	●100U
7.1	■120I	■200V	■200V	■200V	■250W	■200W	●200V	■225Z	■225Y	■225W	■250W	■225W	■250W	●285W
7.2	■110H	■200V	■200V	■200V	■250W	●200W	●200V	■225Z	■225Y	■225W	■250W	■225W	■250W	■285W
7.3	■100G	■112V	■112V	■112V	■200V	●112W	●112V	■150Y	■150X	■180V	■200V	■180V	■200V	■190V
7.4	■90G	■60V	■60V	■60V	■150V	●60W	●60V	■65Y	■65X	■120V	■150V	■120V	■150V	■95V
8.1		■60X	■60X	■60X		■60U	■60X	■75Z	■75X					
8.2		■100V	■100V	■100V		■100U	■100V	■115V	■115V					
8.3														
9.1														
10.1														

ISO
P 1
P 1
P 2
P 3
P 4
H 1
H 3
H 4
M 1
M 3
M 2
S 2
K 1
K 2
K 3
K 4
S 1
S 2
S 3
S 1
S 2
S 3
N 3
N 4
N 3
N 4
N 1
N 1
N 1
N 2
O
O
O
H
O

DORMER

	A723	A122	A119	A123	A120	A022	A620	A117	A520	A124	A720	A920	A921	A002	A002S	
	HSS-E	HSS	HSS	HSS	HSS	HSS	HSS-E	HSS-E	HSS	HSS HM	HSS-E	HSS-E	HSS-E	HSS	HSS	
	DORMER	DIN 1897	DIN 1897	DIN 1897	DIN 1897	DIN ANSI	DIN 1897	DIN 1897	DIN 1897	DIN 8037	DIN 1899	DIN ANSI	DIN ANSI	DIN 338	DIN 338	
	1XD	1XD	1.25XD	1.5XD	2.5XD	2.5XD	2.5XD	2.5XD	2.5XD	2.5XD	2.5XD	3XD	3XD	4XD	4XD	
		90°/120°	120°	120°	135°	135°	130°	135°	130°	118°	118°	130°	130°	118°	118°	
	Bronze		ST	ST	ST	TiN	Bronze	Bronze	TiN	ST			Alcrona Top	TiN	TiN	
	N	N	N	N	N	N	N	N		H	N	W	W	N	N	
									ADX			PFX		002	002	
	6.00 - 8.00	6.00 - 20.00	3.30 - 5.10	3/32 - 1/4	0.50 - 25.00	0.50 - 16.00	2.50 - 13.00	1.00 - 13.00	3.00 - 13.00	3.00 - 16.00	0.15 - 1.40	1.00 - 20.00	2.50 - 16.00	1.00 - 16.00	2.00 - 13.00	
	NEW		NEW	NEW												
AMG	47	48	49	50	51	51	51	51	55	58	59	60	60	63	63	ISO
1.1	■35D	■35E	■35C	■35E	■35J	■35K	●38K	●38K	■57M		■35A	■40J	■60M	■47J	■47J	P 1
1.2	■30D	■30E	■27C	■30E	■30J	■32K	●33H	●33H	■47M		■30A	■34J	■52M	■40J	■40J	P 1
1.3	●25C	■27C	●23C	■27C	■27G	■25I	●30G	●30G	■40K		■27A	■32I	■53J	■35F	■35F	P 2
1.4	●20C	●21C	●20C	●21C	■21G	■23H	●27G	●27G	■32I		■23A	■32I	■53J	■30F	■30F	P 3
1.5		●14C	●8C	●14C	●14F	■16G	●18F	■18F	■21G	●40C	●17A	■23E	■38G	●18F	●18F	P 4
1.6		●10B	●7A	●10B	●10E	●10E	●11E	■11E	●11E	●37A	●10A	■19E	■30G	●10E	●10E	H 1
1.7																H 3
1.8																H 4
2.1		●16C	●15A	●16C	■16F	■15G	■22F	■22F	■30I		●22A	■15F	■17F	●20F	●20F	M 1
2.2		●9D	●7C	●9D	●9H	●8I	■11H	■11H	■16I	●35C	●10A	■7F	■9F	●12G	●12G	M 3
2.3		●10B	●10A	●10B	●10D	●9E	■15D	■15D	■20G	●35C	●15A	■9D	■11D	●16C	●16C	M 2
2.4																S 2
3.1		●32E			■32J	■32K	●34K	●34K	■48M	■55C	■30A	●34L	■53L	■40J	■40J	K 1
3.2		●27C			■27G	■25I	●30F	●30F	■37K	■43C	■24A	●26L	■42L	■30E	■30E	K 2
3.3		●20C			■20F	■20G	●22F	●22F	■30J	■40C	●20A	●26L	■42L	●28E	●28E	K 3
3.4		●16B			●16F	●16G	●17F	■17F	■26F	■32A	●14A	●19J	■36J	●26E	●26E	K 4
4.1		●27C	●27A	●27C	■27G	■25I	●30G	■30G	■34I	●40A	●23A	■30G	●48I	●23F	●23F	S 1
4.2		●12B	●12A	●12B	●16E	●14F	●18F	■18F	■20G	●35A	●17A	■18G	●29I	●13D	●13D	S 2
4.3		●7A	●7A	●7A	●8C	●8C	●10C	■10C	●4B	●25A	●8A	■10C	●16E	●7B	●7B	S 3
5.1		●13D	●9A	●13D	●13H	●13H	●15H	■15H	●17I	●30A	●10A	■15I	●24L	●13G	●13G	S 1
5.2		●8C	●4C	●8C	●8F	●8F	●9F	■9F	●11G	●25A	●7A	■9G	●14I	●7E	●7E	S 2
5.3		●4A	●3C	●4A	●4B	●4B	●6C	■6C	●7E	●20A	●4A	■6E	●10G	●3A	●3A	S 3
6.1		■27D	●27A	■27D	●36H	●36H	●38I	●38I	●40E		●35A	●65H		●50G	●50G	N 3
6.2		■33E	●33C	■33E	●38J	●38K	●40K	●40K	■50I	●70G	●40A	●66J		●33I	●33I	N 4
6.3		■27D	●27C	■27D	●27I	●27I	●27J	●27J	■45K	●60E	●35A	●40J	●71J	●39H	●39H	N 3
6.4		■16D	●16C	■16D	●16H	●16I	●16I	●16I	●20F	●50C	●27A	●31G	●50I	●30G	●30G	N 4
7.1		■33E	●33C	■33E	●33K	■40F	●40K	●35K	●55I		●35A	●75L		■41K	■41K	N 1
7.2		■30E	●30C	■30E	●30J	■32K	●35J	●33J	■50M		●30A	■45N		■38J	■38J	N 1
7.3		●30D	●30C	●30D	●30I	■32J	●32I	●31I	■37K		●27A	●40N		●33I	●33I	N 1
7.4		●25D	●25C	●25D	●25I	●25J	●30G	●30G	■35I		●27A	●36J	■48J	●33I	●33I	N 2
8.1		●30F	●30I	●30F	●30K	●30K	●40L	●35M	●65G		●48A	●55J		■30I	■30I	O
8.2		●35E	●35C	●35E	●35I	●35I	●32K	●28K	■50G	●60E	●25A	●40H		■50H	■50H	O
8.3		●17D		●17D	●17G	●17G	●18I	●17I	■35F					●35F	●35F	O
9.1		●12A		●12A	●4C	●4C		■6C		●9C				●3B	●3B	H
10.1																O

DORMER

	HSS	HSS	HSS	HSS-E	HSS-E	HSS	HSS HM	HSS	HSS-E	HSS-E	HSS-E	HSS	HSS	HSS	HSS-E	HSS-E	
	DIN 338	DIN 338	DIN 338	DIN 338	DIN 338	DORMER	DIN 338	DIN 338	DORMER	DIN ANSI	DIN ANSI	NAS 907	NAS 907	DIN 340	DIN ANSI	DIN ANSI	
	4XD	4XD	4XD	6XD	4XD	4XD	4XD	4XD	5XD	6XD	6XD	4XD	4XD	6XD	10XD	10XD	
	118°	118°	135°	130°	135°	118°	118°	130°	130°	130°	130°	135°	118°	118°	130°	130°	
	ST	ST	ST		Bronze	ST	ST	TiN	TWIN Top		Alcrona Top			ST		Alcrona Top	
									DIN 6535HA								
	N	N	W	VA	N	N	N			W	W	N	N	N	W	W	
						NAS 907J											
								ADX	ADX	PFX	PFX				PFX	PFX	
	A100	A101	A108	A147	A777	A170	A160	A510	A553	A900	A901	A243	A244	A110	A940	A941	
	0.20 - 20.00	1.00 - 12.00	1.00 - 16.00	0.30 - 15.0	0.30 - 16.00	13.00 - 1.1/2	4.00 - 16.00	3.00 - 14.00	5.00 - 20.00	1.00 - 20.00	1.50 - 16.00	3/32 - 1/4	1/8 - 1/4	0.50 - 1"	1.00 - 20.00	1.00 - 16.00	
				NEW													
AMG	63	63	70	70	70	74	76	77	80	82	82	85	85	86	89	89	ISO
1.1	■35H	■35H	●35I	●35I	●35J	●35H	●60E	■57M	■85L	■38H	■60J			●27G	■38F	■53G	P 1
1.2	■30H	■30H	●30I	●30I	●30H	●30H	●60E	■47M	■70L	■33H	■50J			●25G	■33F	■46G	P 1
1.3	■25F	■25F	●25G	●25G	●27G	●25F	●55D	■40K	■60L	■26H	■44I	●25F	●25F	●20E	■22G	■36G	P 2
1.4	■20F	■20F	●20F	●20F	●24F	●20E	●50D	■30H	■45H	■26H	■44I	●20F	●20F	●16E	■22G	■36G	P 3
1.5	●13E	●13E	●13E	●13E	■17E	●13D	●40C	■21F	■28F	■21E	■33G	●13E	●13E	●9D	■17C	■23D	P 4
1.6	●9D	●9D	●9D	●9D	■10D	●9C	●37A	●11D	■15D	■16E	■26G	■9D	■9D	●6B	■12C	■17D	H 1
1.7																	H 3
1.8																	H 4
2.1	●15E	●15E	●15E	■15E	●22E	●15D	●40B	■28G	■40G	■15E	■17E	●15E	●15E	●10D	■15C	■17C	M 1
2.2	●8G	●8G	■9G	■9G	●11G	●7F	●35C	■14I	■19I	■7E	■9E	■8G	■8G	●6F	■7E	■9E	M 3
2.3	●9C	●9C	■10D	■10D	●15C	●7B	●35A	●19G	●27G	■9C	■11C	■9C	■9C	●4B	■9B	■11B	M 2
2.4				●7B													S 2
3.1	■30H	■30H	●30H	●30H	●35H	●27H	■50C	■42K	■70K	●24J	■58I	●30I	●30I	●28H		■36I	K 1
3.2	■24F	■24F	●24F	●24F	●28D	●22E	■40A	■32J	■50J	●19J	■47I	●24F	●24F	●21E	●16I	■30I	K 2
3.3	●20E	●20E	●20E	●20E	●22E	●19D	■35A	■28J	■45J	●19J	■34J	●20E	●20E	●15D	●16I	■30I	K 3
3.4	●14E	●14E	●14E	●14E	■17E	●12D	■30A	■25F	■42F	●14I	■28I	■14E	■14E	●13D	●12H	■24H	K 4
4.1	●23E	●23E	■25G	■25G	■28F	●17E	●35A	●32G	■45G	■22E	●35G	■23F	■23F	●17E	■18E	●25F	S 1
4.2	●12D	●12D	■16E	■16E	■20D	●9C	●35A	●20H	●30E	■15E	●24G	■12D	■12D	●9C	■13C	●18D	S 2
4.3	●6B	●6B	●7B	●7B	■11C	●5A	●25A	●4B	●8C	■6C	●10E	■6B	■6B	●4A	■6C	●8D	S 3
5.1	●10G	●10G	●12G	■12G	●15G	●8F	●30A	●17I	●25I	■14G	●22I	■10G	■10G	●8F			S 1
5.2	●6E	●6E	●7G	●7G	■7E	●4D	●25A	●9E	●15E	■7G	●11I	●6E	●6E	●4D			S 2
5.3	●3A	●3A	●6E	●6E	●6B	●3A	●20A	●6E	●10G	■6C	●10E	●3A	●3A	●3A			S 3
6.1	●33G	●33G	●33G	●33G	●38H	●35F	●55D	●40D	●70G	●65G				●30E	●65F		N 3
6.2	●35I	●35I	●35I	●35I	●40F	●33H	●70G	■50I	■85I	●53I				●32H	●70F		N 4
6.3	●27H	●27H	●31H	●31H	●27H	●27G	●60C	■45I	■80I	●34H	●56I	●27H	●27H	●27G	●34G	●48H	N 3
6.4	●16G	●16G	●16G	●16G	●21F	●16F	●50C	●20F	●35G	●30G	●48I	■16G	■16G	●16E	●30G	●42H	N 4
7.1	●33J	●33J	●33J	●33J	●33J	●33I	●50I	●50G	●70H	●60J				●32I	●53H		N 1
7.2	●30I	●30I	●30I	●30I	●30I	●30H	●45H	■50M	■100M	■45N				●27H	■45N		N 1
7.3	●27H	●27H	●27H	●27H	●30H	●27G	●40G	■31I	■55I	●40N				●27G	●40N		N 1
7.4	●24F	●24F	●24F	●24F	●27F	●22G	●35F	■33I	■55J	●28I	■48I	■24F	■24F	●25E	●30G	■42H	N 2
8.1	●30J	●30J	●30J	●30J		●30I		■65G	■90G	●55I				●35I	●55H		O
8.2	●28H	●28H	●28H	●28H		●28G	●60E	■50G		●40G				●26G	●40F		O
8.3	●14F	●14F	●14F	●14F		●14E		■35F						●12E			O
9.1	●3B	●3B	●3B	●3B	●6C	●3A	●9C					●3B	●3B	●3A			H
10.1																	O

DORMER

	HSS	HSS-E	HSS-E	HSS-E	HSS	HSS	HSS-E	HSS HM	HSS	HSS	HSS	HSS	HSS	HSS	HSS
	BS 328	DIN 1869/1	DIN 1869/2	DIN 1869/3	DIN 345	DIN 345	DIN 345	DIN 345	DIN 341	DIN 1870/1	DIN 1870/1	DIN 1870/2	DIN 8374	DIN 8376	DIN 8377
	10XD	15XD	20XD	25XD	4XD	4XD	4XD	4XD	6XD	10XD	15XD	20XD	4XD	4XD	4XD
	118°	130°	130°	130°	118°	118°	118°	118°	118°	118°	130°	130°	118°	118°	118°
	ST				ST	TiN	Bronze	ST	ST	ST	ST	ST	ST	ST	ST
	N	W	W	W	N	N	N	N	N	N	W	W	N	N	N
		PFX	PFX	PFX											
	A125	A976	A977	A978	A130	A530	A730	A166	A350	A345	A951	A952	A400	A402	A405
	1.40 - 1"	1.50 - 14.00	1.50 - 14.00	3.00 - 10.00	2.00 - 100.00	8.50 - 40.00	10.00 - 32.00	10.00 - 33.00	5.00 - 50.00	8.00 - 50.00	10.00 - 30.00	8.00 - 40.00	M3 - M10	M3 - M10	M6 - M18
AMG	92	96	96	96	99	99	99	105	106	108	110	110	112	113	114
1.1	■24E	●31C	●31B	●31A	■35I	■47I	●35J	●60E	■27I	■24G	■27G	■27G	■32G	■32G	■32G
1.2	■22E	●26C	●26B	●26A	■30I	■40I	●30H	●60E	■25I	■22G	■22G	■22G	■27G	■27G	■27G
1.3	●16C	■22C	■22B	■22A	■25F	■30F	●27G	●55D	●20G	●17E	■19E	■19E	■22E	■22E	■22E
1.4	●15C	■22C	■22B	■22A	■20F	■27F	●23F	●50D	●16F	●15D	●15D	●15D	■20E	■20E	■20E
1.5	●6A	■12A	■12A	■12A	●12E	●20E	■17E	●40C	●10E	●6C	●8C	●8C	●10C	●10C	●10C
1.6	●5A	■10A	■10A	■10A	●9D	●10D	■10D	●37A	●6D	●5B	●6B	●6B	●6C	●6C	●6C
1.7															
1.8															
2.1	●9C	●12B	●12B	●12A	●15E	●24E	●24E	●40B	●13E	●12C	●12C	●12C	●16E	●16E	●16E
2.2	●4E	●7C	●7B	●7A	●9G	●13G	■11G	●35C	●4G	●4E	●6E	●6E	●9G	●9G	●9G
2.3	●8A	●8A	●8A	●8A	●10C	●20C	■17C	●35A	●8C	●8A	●12A	●12A	●12C	●12C	●12C
2.4															
3.1	●22G				■30I	●36I	●35J	■50C	●26I	●22G	●22G	●22G	■30G	■30G	■30G
3.2	●18D	●23C	●23B	●23A	■24E	■28E	●28G	■40C	●20F	●18D	●16D	●16D	■25E	■25E	■25E
3.3	●13C	●16C	●16B	●16A	●20E	■27E	●22E	■35C	●18E	●13C	●13C	●13C	●19E	●19E	●19E
3.4	●9C	●11A	●11A	●11A	●14E	●22E	■17E	■30A	●11E	●9C	●9C	●9C	●18C	●18C	●18C
4.1	●11D	●15C	●15B	●15A	●23F	●32F	●28G	●35A	●16F	●15D	●18D	●18D	●23E	●23E	●23E
4.2	●9B	●11A	●11A	●11A	●13D	●18D	●20D	●35A	●9D	●9B	●10B	●10B	●14C	●14C	●14C
4.3	●5A	●5A	●5A	●5A	●7B	●13B	●11C	●25A	●5B	●5A	●6A	●6A	●8A	●8A	●8A
5.1	●5E				●10G	●13G	●15G	●30A	●8G	●8E	●7E	●7E	●10G	●10G	●10G
5.2	●4C				●7E	●6E	●7E	●25A	●4E	●4C	●5C	●5C	●6C	●6C	●6C
5.3	●3A				●4A	●3A	●6B	●20A	●3A	●3A	●3A	●3A	●4A	●4A	●4A
6.1	●24D				●33F	●60G	●38L	●55D	●33F	●27D	●22D	●22D	●35E	●35E	●35E
6.2	●33G				●35I	●55I	●40J	●75G	●35I	●33G	●33G	●33G	●40E	●40E	●40E
6.3	●22F	●30D	●30C	●30B	●35H	■40G	●27H	●60C	●35H	●27F	●22F	●22F	●32E	●32E	●32E
6.4	●16D	●27D	●27C	●27B	●16F	●35E	●21F	●50C	●16F	●16D	●16D	●16D	●20E	●20E	●20E
7.1	●24H				●26J	●55I	●33J	●50I	●33J	●33H	●30H	●30H	●45E	●45E	●45E
7.2	●22G				●30I	●45I	●30I	●45H	●25I	●27G	●27G	●27G	●32E	●32E	●32E
7.3	●22F				●28H	●35G	●30H	●40G	●27H	●27F	●24F	●24F	●32E	●32E	●32E
7.4	●20E	●27D	●27C	●27B	●23H	●28G	●27F	●35F	●25H	●24F	●22F	●22F	●25E	●25E	●25E
8.1	●30H				●30K	●50J	●35K		●35L	●30J	●30J	●30J	●30I	●30I	●30I
8.2	●26F				●28J	●50H	●28J	●60E	●26J	●30H	●30H	●30H			
8.3	●10D				●14H	●35F	●20H		●12H	●10F	●10F	●10F			
9.1	●3A				●3B	●3B	●5C	●9C	●3B	●3A	●3A	●3A			
10.1															

ISO
P 1
P 1
P 2
P 3
P 4
H 1
H 3
H 4
M 1
M 3
M 2
S 2
K 1
K 2
K 3
K 4
S 1
S 2
S 3
S 1
S 2
S 3
N 3
N 4
N 3
N 4
N 1
N 1
N 1
N 2
O
O
O
H
O

DORMER

	A412	A413	A200	A205	A206	A266	A210	A201	A225	A237	A238	A242	A088	A095	A087	
	HSS	HSS	HSS	HSS	HSS-E	HSS-E	HSS	HSS	HSS	HSS-E	HSS-E	HSS-E				
	DORMER	DORMER	DIN 333A	DIN 333A	DIN 333A	DIN 333A	DIN 333R	DORMER	BS 328	DIN 333A	DIN 333R	DORMER				
	2.5XD	2.5XD	1XD	1XD	1XD	1XD	1XD	1XD	1XD	1XD	1XD	1XD				
	118°	118°	118°	118°	118°	118°	118°	122°	120°	118°	118°	118°				
	ST	ST		TiN		TiAlN										
										d_s	d_s					
	M3 - M10	M3 - M10	0.50 - 12.50	1.00 - 5.00	1.00 - 5.00	1.00 - 5.00	0.50 - 10.00	0.63 - 6.00	3/64 - 5/16	1.60 - 10.00	1.60 - 8.00	1.00 - 5.00	Set	Set	Set	
					NEW	NEW				NEW	NEW	NEW			NEW	
AMG	115	116	117	117	117	117	118	119	120	121	122	123	124	125	126	ISO
1.1	■32I	■32I	■35I	■42I	■42I	■42I	■35I	■35I	■35I	■35I	■35I	■35I				P 1
1.2	■27I	■27I	■30I	■36I	■36I	■36I	■30I	■30I	■30I	■30I	■30I	■30I				P 1
1.3	■22G	■22G	■25G	■30G	■30G	■30G	■25G	■25G	■25G	■25G	■25G	■25G				P 2
1.4	■20G	■20G	■20F	■24F	■24F	■24F	■20F	■20F	■20F	■20F	■20F	■20F				P 3
1.5	●10E	●10E	●13E	●16E	●16E	●16E	●13E	●13E	●13E	●13E	●13E	●13E				P 4
1.6	●6C	●6C	●9D	●11D	●11D	●11D	●9D	●9D	●9D	●9D	●9D	●9D				H 1
1.7																H 3
1.8																H 4
2.1	■16G	■16G	●15E	●18E	●18E	●18E	●15E	●15E	●15E	●15E	●15E	●15E				M 1
2.2	●9I	●9I	●8G	●10G	●10G	●10G	●8G	●8G	●8G	●8G	●8G	●8G				M 3
2.3	●12E	●12E	●10C	●12C	●12C	●12C	●10C	●10C	●10C	●10C	●10C	●10C				M 2
2.4																S 2
3.1	■30G	■30G	■30I	■36I	■36I	■36I	■30I	■30I	■30I	■30I	■30I	■30I				K 1
3.2	■25E	■25E	■24F	■29F	■29F	■29F	■24F	■24F	■24F	■24F	■24F	■24F				K 2
3.3	●19E	●19E	●20E	●24E	●24E	●24E	●20E	●20E	●20E	●20E	●20E	●20E				K 3
3.4	●18E	●18E	●14E	●17E	●17E	●17E	●14E	●14E	●14E	●14E	●14E	●14E				K 4
4.1	●27G	●27G	●24F	●29F	●29F	●29F	●24F	●24F	●24F	●24F	●24F	●24F				S 1
4.2	●16E	●16E	●13D	●16D	●16D	●16D	●13D	●13D	●13D	●13D	●13D	●13D				S 2
4.3	●8C	●8C	●7B	●8B	●8B	●8B	●7B	●7B	●7B	●7B	●7B	●7B				S 3
5.1	●13I	●13I	●10G	●12G	●12G	●12G	●10G	●10G	●10G	●10G	●10G	●10G				S 1
5.2	●8G	●8G	●5E	●6E	●6E	●6E	●5E	●5E	●5E	●5E	●5E	●5E				S 2
5.3	●4C	●4C	●4A	●5A	●5A	●5A	●4A	●4A	●4A	●4A	●4A	●4A				S 3
6.1	●35G	●35G	●35G	●42G	●42G	●42G	●35G	●35G	●35G	●35G	●35G	●35G				N 3
6.2	●40G	●40G	●33I	●40I	●40I	●40I	●33I	●33I	●33I	●33I	●33I	●33I				N 4
6.3	●32G	●32G	●27H	●32H	●32H	●32H	●27H	●27H	●27H	●27H	●27H	●27H				N 3
6.4	●20G	●20G	●16G	●19G	●19G	●19G	●16G	●16G	●16G	●16G	●16G	●16G				N 4
7.1	●45G	●45G	●33J	●40J	●40J	●40J	●33J	●33J	●33J	●33J	●33J	●33J				N 1
7.2	●32G	●32G	●30I	●36I	●36I	●36I	●30I	●30I	●30I	●30I	●30I	●30I				N 1
7.3	●27G	●27G	●27H	●32H	●32H	●32H	●27H	●27H	●27H	●27H	●27H	●27H				N 1
7.4	●25G	●25G	●22H	●26H	●26H	●26H	●22H	●22H	●22H	●22H	●22H	●22H				N 2
8.1	●30I	●30I	●30J	●36J	●36J	●36J	●30J	●30J	●30J	●30J	●30J	●30J				O
8.2			●28H	●34H	●34H	●34H	●28H	●28H	●28H	●28H	●28H	●28H				O
8.3			●14F	●17F	●17F	●17F	●14F	●14F	●14F	●14F	●14F	●14F				O
9.1			●3B	●4B	●4B	●4B	●3B	●3B	●3B	●3B	●3B	●3B				H
10.1																O

DORMER

	A094	A089	A099	A099	A199	A080	
	Set	Set	Set	DRILLBOY	Set	Set	
		NEW				NEW	
AMG	127	128	129	129	130	131	ISO
1.1							P 1
1.2							P 1
1.3							P 2
1.4							P 3
1.5							P 4
1.6							H 1
1.7							H 3
1.8							H 4
2.1							M 1
2.2							M 3
2.3							M 2
2.4							S 2
3.1							K 1
3.2							K 2
3.3							K 3
3.4							K 4
4.1							S 1
4.2							S 2
4.3							S 3
5.1							S 1
5.2							S 2
5.3							S 3
6.1							N 3
6.2							N 4
6.3							N 3
6.4							N 4
7.1							N 1
7.2							N 1
7.3							N 1
7.4							N 2
8.1							O
8.2							O
8.3							O
9.1							H
10.1							O

	A190	A191	A188	A295	A296	
	Set	Set	Set	Set	Set	
			NEW			
AMG	132	133	134	135	136	ISO
1.1						P 1
1.2						P 1
1.3						P 2
1.4						P 3
1.5						P 4
1.6						H 1
1.7						H 3
1.8						H 4
2.1						M 1
2.2						M 3
2.3						M 2
2.4						S 2
3.1						K 1
3.2						K 2
3.3						K 3
3.4						K 4
4.1						S 1
4.2						S 2
4.3						S 3
5.1						S 1
5.2						S 2
5.3						S 3
6.1						N 3
6.2						N 4
6.3						N 3
6.4						N 4
7.1						N 1
7.2						N 1
7.3						N 1
7.4						N 2
8.1						O
8.2						O
8.3						O
9.1						H
10.1						O

DORMER

HM | HSS HM | HSS | HSS-E

Ø(D)	1mm	2mm	3mm	4mm	5mm	6mm	8mm	10mm	12mm	15mm	16mm	20mm	25mm	30mm	40mm	50mm
A	0.012	0.023	0.029	0.032	0.036	0.042	0.054	0.062	0.069	0.082	0.086	0.110	0.125	0.135	0.155	0.175
B	0.014	0.028	0.037	0.041	0.046	0.053	0.067	0.080	0.090	0.103	0.108	0.135	0.153	0.165	0.188	0.208
C	0.015	0.032	0.044	0.050	0.056	0.064	0.080	0.098	0.110	0.125	0.130	0.160	0.180	0.195	0.220	0.240
D	0.016	0.038	0.053	0.060	0.068	0.078	0.098	0.119	0.130	0.149	0.155	0.188	0.210	0.228	0.253	0.275
E	0.017	0.043	0.062	0.071	0.080	0.092	0.115	0.140	0.150	0.173	0.180	0.215	0.240	0.260	0.285	0.310
F	0.018	0.050	0.073	0.084	0.095	0.109	0.138	0.165	0.178	0.202	0.210	0.248	0.275	0.295	0.320	0.343
G	0.019	0.056	0.084	0.096	0.109	0.126	0.160	0.190	0.205	0.231	0.240	0.280	0.310	0.330	0.355	0.375
H	0.020	0.066	0.102	0.116	0.130	0.150	0.190	0.228	0.243	0.271	0.280	0.320	0.355	0.375	0.398	0.418
I	0.021	0.076	0.119	0.134	0.150	0.173	0.220	0.265	0.280	0.310	0.320	0.360	0.400	0.420	0.440	0.460
J	0.024	0.084	0.135	0.152	0.170	0.197	0.250	0.298	0.315	0.349	0.360	0.405	0.445	0.465	0.485	0.503
K	0.026	0.092	0.150	0.170	0.190	0.220	0.280	0.330	0.350	0.388	0.400	0.450	0.490	0.510	0.530	0.545
L	0.028	0.101	0.165	0.186	0.208	0.240	0.305	0.360	0.385	0.419	0.430	0.485	0.525	0.545	0.568	0.588
M	0.030	0.110	0.180	0.202	0.225	0.260	0.330	0.390	0.420	0.450	0.460	0.520	0.560	0.580	0.605	0.630
N	0.032	0.119	0.195	0.218	0.242	0.280	0.355	0.420	0.455	0.481	0.490	0.555	0.595	0.615	0.642	0.672
S	0.008	0.014	0.020	0.025	0.030	0.037	0.050	0.080	0.100	0.123	0.130	0.150				
T	0.015	0.028	0.040	0.050	0.060	0.070	0.090	0.110	0.130	0.160	0.170	0.190				
U	0.026	0.048	0.070	0.080	0.090	0.107	0.140	0.170	0.200	0.223	0.230	0.240				
V	0.038	0.069	0.100	0.115	0.130	0.153	0.200	0.250	0.280	0.310	0.320	0.340				
W	0.049	0.089	0.130	0.150	0.170	0.200	0.260	0.330	0.380	0.418	0.430	0.450				
X	0.056	0.103	0.150	0.180	0.210	0.250	0.330	0.420	0.480	0.533	0.550	0.580				
Y	0.068	0.124	0.180	0.220	0.260	0.317	0.430	0.550	0.700	0.700	0.700	0.740				
Z	0.094	0.172	0.250	0.325	0.400	0.533	0.800	1.000	1.100	1.175	1.200	1.200				
	mm/N ± 25 %															

$$n = \frac{Vc \times 1000}{\pi \times D}$$

$$Vf = n \times fn$$

HM

Ø(D)	12mm	15mm	16mm	20mm	25mm	30mm	40mm
S	0.100	0.123	0.130	0.150	0.170	0.190	0.220
T	0.130	0.160	0.170	0.190	0.210	0.230	0.260
U	0.200	0.223	0.230	0.240	0.270	0.300	0.360
V	0.280	0.310	0.320	0.340	0.400	0.440	0.510
W	0.380	0.418	0.430	0.450	0.470	0.490	0.520
	mm/N ± 25 %						

DORMER

R950 R960 R970	18
H853 H855 H858	21
H860 H861	24

H861	H860	R950 R960 R970	H853 H855 H858

R950	R960	R970	H853	H855	H858	H860	H861
							
15/32 - 42.00	15/32 - 30.50	15/32 - 42.00	15/32 - 42.00	15/32 - 30.50	15/32 - 42.00	N1 - N7	N1 - N6

R950	R960	R970	H853	H855	H858	H860	H861
R95015/32	R96015/32	R97015/32	H85312.0 H85331/64	H85512.0 H85531/64	H85812.0	H860N1	H860N1
R95012.0	R96012.0	R97012.0					
R95012.1	R96012.1	R97012.1					
R95012.2	R96012.2	R97012.2					
R95031/64	R96031/64	R97031/64					
R95012.5	R96012.5	R97012.5	H85312.5 H8531/2	H85512.5 H8551/2	H85812.5		
R95012.6	R96012.6	R97012.6					
R9501/2	R9601/2	R9701/2					
R95012.8	R96012.8	R97012.8					
R95012.9	R96012.9	R97012.9					
R95013.0	R96013.0	R97013.0	H85313.0 H85317/32	H85513.0 H85517/32	H85813.0		
R95033/64	R96033/64	R97033/64					
R95013.2	R96013.2	R97013.2					
R95017/32	R96017/32	R97017/32					
R95013.5	R96013.5	R97013.5	H85314.0 H8539/16	H85514.0 H8559/16	H85814.0		
R95013.6	R96013.6	R97013.6					
R95013.7	R96013.7	R97013.7					
R95013.8	R96013.8	R97013.8					
R95035/64	R96035/64	R97035/64					
R95014.0	R96014.0	R97014.0					
R95014.1	R96014.1	R97014.1					
R95014.2	R96014.2	R97014.2					
R9509/16	R9609/16	R9709/16					
R95014.5	R96014.5	R97014.5					
R95014.6	R96014.6	R97014.6	H85315.0 H85339/64	H85515.0 H85539/64	H85815.0		
R95037/64	R96037/64	R97037/64					
R95014.7	R96014.7	R97014.7					
R95014.8	R96014.8	R97014.8					
R95015.0	R96015.0	R97015.0					
R95019/32	R96019/32	R97019/32					
R95015.1	R96015.1	R97015.1					
R95015.2	R96015.2	R97015.2					
R95039/64	R96039/64	R97039/64					
R95015.5	R96015.5	R97015.5					

DORMER

R950	R960	R970	H853	H855	H858	H860	H861
R95015.6	R96015.6	R97015.6	H85316.0 H85341/64	H85516.0 H85541/64	H85816.0	H860N2	H861N2
R95015.7	R96015.7	R97015.7					
R9505/8	R9605/8	R9705/8					
R95016.0	R96016.0	R97016.0					
R95016.1	R96016.1	R97016.1					
R95016.2	R96016.2	R97016.2					
R95041/64	R96041/64	R97041/64					
R95016.5	R96016.5	R97016.5					
R95016.6	R96016.6	R97016.6	H85317.0 H85311/16	H85517.0 H85511/16	H85817.0		
R95021/32	R96021/32	R97021/32					
R95016.7	R96016.7	R97016.7					
R95017.0	R96017.0	R97017.0					
R95043/64	R96043/64	R97043/64					
R95017.1	R96017.1	R97017.1					
R95017.2	R96017.2	R97017.2					
R95011/16	R96011/16	R97011/16					
R95017.5	R96017.5	R97017.5					
R95017.6	R96017.6	R97017.6	H85318.0 H85323/32	H85518.0 H85523/32	H85818.0		
R95017.7	R96017.7	R97017.7					
R95045/64	R96045/64	R97045/64					
R95018.0	R96018.0	R97018.0					
R95018.1	R96018.1	R97018.1					
R95018.2	R96018.2	R97018.2					
R95023/32	R96023/32	R97023/32					
R95018.5	R96018.5	R97018.5					
R95018.6	R96018.6	R97018.6	H85319.0 H85349/64	H85519.0 H85549/64	H85819.0	H860N3	H861N3
R95047/64	R96047/64	R97047/64					
R95018.7	R96018.7	R97018.7					
R95018.9	R96018.9	R97018.9					
R95019.0	R96019.0	R97019.0					
R9503/4	R9603/4	R9703/4					
R95019.1	R96019.1	R97019.1					
R95019.2	R96019.2	R97019.2					
R95019.25	R96019.25	R97019.25					
R95049/64	R96049/64	R97049/64					
R95019.5	R96019.5	R97019.5					
R95019.6	R96019.6	R97019.6	H85320.0 H85351/64	H85520.0 H85551/64	H85820.0		
R95019.7	R96019.7	R97019.7					
R95025/32	R96025/32	R97025/32					
R95020.0	R96020.0	R97020.0					
R95051/64	R96051/64	R97051/64					
R95020.5	R96020.5	R97020.5					
R95013/16	R96013/16	R97013/16	H85321.0 H85327/32	H85521.0 H85527/32	H85821.0		
R95021.0	R96021.0	R97021.0					
R95053/64	R96053/64	R97053/64					
R95027/32	R96027/32	R97027/32					
R95021.5	R96021.5	R97021.5					
R95055/64	R96055/64	R97055/64	H85322.0 H85357/64	H85522.0 H85557/64	H85822.0	H860N4	
R95022.0	R96022.0	R97022.0					
R9507/8	R9607/8	R9707/8					
R95022.5	R96022.5	R97022.5					
R95057/64	R96057/64	R97057/64					
R95022.7	R96022.7	R97022.7					
R95023.0	R96023.0	R97023.0	H85323.0 H85359/64	H85523.0 H85559/64	H85823.0		
R95029/32	R96029/32	R97029/32					
R95059/64	R96059/64	R97059/64					
R95023.5	R96023.5	R97023.5					
R95015/16	R96015/16	R97015/16	H85324.0 H85331/32	H85524.0 H85531/32	H85824.0		
R95024.0	R96024.0	R97024.0					
R95061/64	R96061/64	R97061/64					
R95024.5	R96024.5	R97024.5					
R95031/32	R96031/32	R97031/32					

R950	R960	R970	H853	H855	H858	H860	H861
R95025.0	R96025.0	R97025.0					
R95063/64	R96063/64	R97063/64					
R9501	R9601	R9701	H85325.0 H8531.1/64	H85525.0 H8551.1/64	H85825.0		
R95025.5	R96025.5	R97025.5					
R95025.65	R96025.65	R97025.65					
R9501.1/64	R9601.1/64	R9701.1/64					
R95026.0	R96026.0	R97026.0					
R9501.1/32	R9601.1/32	R9701.1/32	H85326.0 H8531.3/64	H85526.0 H8551.3/64	H85826.0	H860N5	H861N4
R95026.5	R96026.5	R97026.5					
R9501.3/64	R9601.3/64	R9701.3/64					
R9501.1/16	R9601.1/16	R9701.1/16					
R95027.0	R96027.0	R97027.0	H85327.0 H8531.3/32	H85527.0 H8551.3/32	H85827.0		
R9501.5/64	R9601.5/64	R9701.5/64					
R95027.5	R96027.5	R97027.5					
R9501.3/32	R9601.3/32	R9701.3/32					
R95028.0	R96028.0	R97028.0					
R9501.7/64	R9601.7/64	R9701.7/64	H85328.0 H8531.1/8	H85528.0 H8551.1/8	H85828.0		
R95028.5	R96028.5	R97028.5					
R9501.1/8	R9601.1/8	R9701.1/8					
R9501.9/64	R9601.9/64	R9701.9/64					
R95029.0	R96029.0	R97029.0	H85329.0 H8531.11/64	H85529.0 H8551.11/64	H85829.0		
R9501.5/32	R9601.5/32	R9701.5/32					
R95029.5	R96029.5	R97029.5					
R9501.11/64	R9601.11/64	R9701.11/64					
R95030.0	R96030.0	R97030.0	H85330.0 H8531.3/16	H85530.0 H8551.3/16	H85830.0	H860N6	H861N5
R9501.3/16	R9601.3/16	R9701.3/16					
R95030.5	R96030.5	R97030.5					
R9501.7/32		R9701.7/32					
R95031.0		R97031.0	H85332.0	H85532.0	H85832.0		
R9501.1/4		R9701.1/4					
R95032.0		R97032.0					
R95032.5		R97032.5					
R9501.19/64		R9701.19/64	H85333.5	H85533.5	H85833.5		
R95033.0		R97033.0					
R95033.5		R97033.5					
R95034.0		R97034.0					
R9501.11/32		R9701.11/32					
R95034.5		R97034.5	H85335.0	H85535.0	H85835.0		
R9501.3/8		R9701.3/8					
R95035.0		R97035.0					
R95036.0		R97036.0					
R9501.27/64		R9701.27/64	H85336.5	H85536.5	H85836.5		
R95036.5		R97036.5					
R95037.0		R97037.0					
R9501.15/32		R9701.15/32	H85338.0	H85538.0	H85838.0		
R95037.5		R97037.5					
R95038.0		R97038.0				H860N7	H861N6
R9501.1/2		R9701.1/2					
R95038.5		R97038.5					
R9501.17/32		R9701.17/32	H85339.5	H85539.5	H85839.5		
R95039.0		R97039.0					
R95039.5		R97039.5					
R9501.9/16		R9701.9/16					
R95040.0		R97040.0	H85341.0	H85541.0	H85841.0		
R95041.0		R97041.0					
R9501.5/8		R9701.5/8	H85342.5	H85542.5	H85842.5		
R95042.0		R97042.0					

DORMER

R950

- 适用于钢件的天龙钻头
- Cabeça Hydra para Aço
- punta Hydra para Acero
- Hydra Drill Head for Steel

钻头刀体内包括 4 螺钉 H860 和 1 螺丝刀 H861
Quatro (4) parafusos H860 e uma (1) chave H861estão inclusos com o corpo da broca
Cuatro (4) tornillos H860 y un (1) destornillador H861 incluidos con cada cuerpo
Four (4) screws H860 and one (1) screwdriver H861 are included with a drill body

R960

- 适用于不锈钢的天龙钻头
- Cabeça Hydra para Aço Inoxidável
- punta Hydra para Acero Inoxidable
- Hydra Drill Head for Stainless Steel

钻头刀体内包括 4 螺钉 H860 和 1 螺丝刀 H861
Quatro (4) parafusos H860 e uma (1) chave H861estão inclusos com o corpo da broca
Cuatro (4) tornillos H860 y un (1) destornillador H861 incluidos con cada cuerpo
Four (4) screws H860 and one (1) screwdriver H861 are included with a drill body

R970

- 适用于铸铁的天龙钻头
- Cabea Hydra para Ferro fundido
- punta Hydra para Hierro Fundido
- Hydra Drill Head for Cast Iron

钻头刀体内包括 4 螺钉 H860 和 1 螺丝刀 H861
Quatro (4) parafusos H860 e uma (1) chave H861estão inclusos com o corpo da broca
Cuatro (4) tornillos H860 y un (1) destornillador H861 incluidos con cada cuerpo
Four (4) screws H860 and one (1) screwdriver H861 are included with a drill body

R950	■	1.3 1.4 1.5 1.6 3.3 3.4
	•	1.1 1.2 2.4
R960	■	1.1 1.2 2.1 2.2 2.3 3.1 3.2
	•	2.4 3.3 3.4 4.1
R970	■	3.1 3.2 3.3 3.4

R950	R960	R970
15/32 - 42.00	15/32 - 30.50	15/32 - 42.00

d_1 Øh_7 Inch	d_1 Øh_7 mm	d_1 decimal Inch	l_1 mm	R950	R960	R970
15/32	11.91	0.4688	9.1	R95015/32	R96015/32	R97015/32
	12.00	0.4724	9.1	R95012.0	R96012.0	R97012.0
	12.10	0.4764	9.1	R95012.1	R96012.1	R97012.1
	12.20	0.4803	9.1	R95012.2	R96012.2	R97012.2
31/64	12.30	0.4844	9.1	R95031/64	R96031/64	R97031/64
	12.50	0.4921	9.4	R95012.5	R96012.5	R97012.5
	12.60	0.4961	9.4	R95012.6	R96012.6	R97012.6
1/2	12.70	0.5000	9.4	R9501/2	R9601/2	R9701/2
	12.80	0.5039	9.4	R95012.8	R96012.8	R97012.8
	12.90	0.5079	9.4	R95012.9	R96012.9	R97012.9
	13.00	0.5118	9.7	R95013.0	R96013.0	R97013.0
33/64	13.10	0.5156	9.7	R95033/64	R96033/64	R97033/64
	13.20	0.5197	9.7	R95013.2	R96013.2	R97013.2
17/32	13.49	0.5313	9.7	R95017/32	R96017/32	R97017/32
	13.50	0.5315	10.3	R95013.5	R96013.5	R97013.5
	13.60	0.5354	10.3	R95013.6	R96013.6	R97013.6
	13.70	0.5394	10.3	R95013.7	R96013.7	R97013.7
	13.80	0.5433	10.3	R95013.8	R96013.8	R97013.8

d_1 Øh_7 Inch	d_1 Øh_7 mm	d_1 decimal Inch	l_1 mm	R950	R960	R970
35/64	13.89	0.5469	10.3	R95035/64	R96035/64	R97035/64
	14.00	0.5512	10.3	R95014.0	R96014.0	R97014.0
	14.10	0.5551	10.3	R95014.1	R96014.1	R97014.1
	14.20	0.5591	10.3	R95014.2	R96014.2	R97014.2
9/16	14.29	0.5625	10.3	R9509/16	R9609/16	R9709/16
	14.50	0.5709	10.3	R95014.5	R96014.5	R97014.5
	14.60	0.5748	11.0	R95014.6	R96014.6	R97014.6
37/64	14.68	0.5781	11.0	R95037/64	R96037/64	R97037/64
	14.70	0.5787	11.0	R95014.7	R96014.7	R97014.7
	14.80	0.5827	11.0	R95014.8	R96014.8	R97014.8
	15.00	0.5906	11.0	R95015.0	R96015.0	R97015.0
19/32	15.08	0.5938	11.0	R95019/32	R96019/32	R97019/32
	15.10	0.5945	11.0	R95015.1	R96015.1	R97015.1
	15.20	0.5984	11.0	R95015.2	R96015.2	R97015.2
39/64	15.48	0.6094	11.0	R95039/64	R96039/64	R97039/64
	15.50	0.6102	11.0	R95015.5	R96015.5	R97015.5
	15.60	0.6142	11.6	R95015.6	R96015.6	R97015.6
	15.70	0.6181	11.6	R95015.7	R96015.7	R97015.7
5/8	15.88	0.6250	11.6	R9505/8	R9605/8	R9705/8
	16.00	0.6299	11.6	R95016.0	R96016.0	R97016.0
	16.10	0.6339	11.6	R95016.1	R96016.1	R97016.1
	16.20	0.6378	11.6	R95016.2	R96016.2	R97016.2
41/64	16.27	0.6406	11.6	R95041/64	R96041/64	R97041/64
	16.50	0.6496	11.6	R95016.5	R96016.5	R97016.5
	16.60	0.6535	12.2	R95016.6	R96016.6	R97016.6
21/32	16.67	0.6563	12.2	R95021/32	R96021/32	R97021/32
	16.70	0.6575	12.2	R95016.7	R96016.7	R97016.7
	17.00	0.6693	12.2	R95017.0	R96017.0	R97017.0
43/64	17.07	0.6719	12.2	R95043/64	R96043/64	R97043/64
	17.10	0.6732	12.2	R95017.1	R96017.1	R97017.1
	17.20	0.6772	12.2	R95017.2	R96017.2	R97017.2
11/16	17.46	0.6875	12.2	R95011/16	R96011/16	R97011/16
	17.50	0.6890	12.2	R95017.5	R96017.5	R97017.5
	17.60	0.6929	12.9	R95017.6	R96017.6	R97017.6
	17.70	0.6969	12.9	R95017.7	R96017.7	R97017.7
45/64	17.86	0.7031	12.9	R95045/64	R96045/64	R97045/64
	18.00	0.7087	12.9	R95018.0	R96018.0	R97018.0
	18.10	0.7126	12.9	R95018.1	R96018.1	R97018.1
	18.20	0.7165	12.9	R95018.2	R96018.2	R97018.2
23/32	18.26	0.7188	12.9	R95023/32	R96023/32	R97023/32
	18.50	0.7283	12.9	R95018.5	R96018.5	R97018.5
	18.60	0.7323	13.5	R95018.6	R96018.6	R97018.6
47/64	18.65	0.7344	13.5	R95047/64	R96047/64	R97047/64
	18.70	0.7362	13.5	R95018.7	R96018.7	R97018.7
	18.90	0.7441	13.5	R95018.9	R96018.9	R97018.9
	19.00	0.7480	13.5	R95019.0	R96019.0	R97019.0
3/4	19.05	0.7500	13.5	R9503/4	R9603/4	R9703/4
	19.10	0.7520	13.5	R95019.1	R96019.1	R97019.1
	19.20	0.7559	13.5	R95019.2	R96019.2	R97019.2
	19.25	0.7579	13.5	R95019.25	R96019.25	R97019.25
49/64	19.45	0.7656	13.5	R95049/64	R96049/64	R97049/64
	19.50	0.7677	13.5	R95019.5	R96019.5	R97019.5
	19.60	0.7717	14.1	R95019.6	R96019.6	R97019.6
	19.70	0.7756	14.1	R95019.7	R96019.7	R97019.7
25/32	19.84	0.7813	14.1	R95025/32	R96025/32	R97025/32
	20.00	0.7874	14.1	R95020.0	R96020.0	R97020.0
51/64	20.24	0.7969	14.1	R95051/64	R96051/64	R97051/64
	20.50	0.8071	14.1	R95020.5	R96020.5	R97020.5
13/16	20.64	0.8125	14.8	R95013/16	R96013/16	R97013/16
	21.00	0.8268	14.8	R95021.0	R96021.0	R97021.0
53/64	21.03	0.8281	14.8	R95053/64	R96053/64	R97053/64
27/32	21.43	0.8438	14.8	R95027/32	R96027/32	R97027/32
	21.50	0.8465	14.8	R95021.5	R96021.5	R97021.5
55/64	21.83	0.8594	15.0	R95055/64	R96055/64	R97055/64
	22.00	0.8661	15.0	R95022.0	R96022.0	R97022.0
7/8	22.22	0.8750	15.0	R9507/8	R9607/8	R9707/8
	22.50	0.8858	15.0	R95022.5	R96022.5	R97022.5
57/64	22.62	0.8906	15.0	R95057/64	R96057/64	R97057/64
	22.70	0.8937	15.0	R95022.7	R96022.7	R97022.7
	23.00	0.9055	15.1	R95023.0	R96023.0	R97023.0

d_1 Øh$_7$ Inch	d_1 Øh$_7$ mm	d_1 decimal Inch	l_1 mm	R950	R960	R970
29/32	23.02	0.9063	15.1	R95029/32	R96029/32	R97029/32
59/64	23.42	0.9219	15.1	R95059/64	R96059/64	R97059/64
	23.50	0.9252	15.1	R95023.5	R96023.5	R97023.5
15/16	23.81	0.9375	15.4	R95015/16	R96015/16	R97015/16
	24.00	0.9449	15.4	R95024.0	R96024.0	R97024.0
61/64	24.21	0.9531	15.4	R95061/64	R96061/64	R97061/64
	24.50	0.9646	15.4	R95024.5	R96024.5	R97024.5
31/32	24.61	0.9688	15.4	R95031/32	R96031/32	R97031/32
	25.00	0.9844	15.8	R95025.0	R96025.0	R97025.0
63/64	25.00	0.9844	15.8	R95063/64	R96063/64	R97063/64
1“	25.40	1.0000	15.8	R9501	R9601	R9701
	25.50	1.0039	15.8	R95025.5	R96025.5	R97025.5
	25.65	1.0098	15.8	R95025.65	R96025.65	R97025.65
1.1/64	25.80	1.0156	15.8	R9501.1/64	R9601.1/64	R9701.1/64
	26.00	1.0236	16.4	R95026.0	R96026.0	R97026.0
1.1/32	26.19	1.0313	16.4	R9501.1/32	R9601.1/32	R9701.1/32
	26.50	1.0433	16.4	R95026.5	R96026.5	R97026.5
1.3/64	26.59	1.0469	16.4	R9501.3/64	R9601.3/64	R9701.3/64
1.1/16	26.99	1.0625	17.1	R9501.1/16	R9601.1/16	R9701.1/16
	27.00	1.0630	17.1	R95027.0	R96027.0	R97027.0
1.5/64	27.38	1.0781	17.1	R9501.5/64	R9601.5/64	R9701.5/64
	27.50	1.0827	17.1	R95027.5	R96027.5	R97027.5
1.3/32	27.78	1.0938	17.1	R9501.3/32	R9601.3/32	R9701.3/32
	28.00	1.1024	17.7	R95028.0	R96028.0	R97028.0
1.7/64	28.18	1.1094	17.7	R9501.7/64	R9601.7/64	R9701.7/64
	28.50	1.1220	17.7	R95028.5	R96028.5	R97028.5
1.1/8	28.58	1.1250	17.7	R9501.1/8	R9601.1/8	R9701.1/8
1.9/64	28.97	1.1406	18.3	R9501.9/64	R9601.9/64	R9701.9/64
	29.00	1.1417	18.3	R95029.0	R96029.0	R97029.0
1.5/32	29.37	1.1563	18.3	R9501.5/32	R9601.5/32	R9701.5/32
	29.50	1.1614	18.3	R95029.5	R96029.5	R97029.5
1.11/64	29.77	1.1719	18.3	R9501.11/64	R9601.11/64	R9701.11/64
	30.00	1.1811	19.0	R95030.0	R96030.0	R97030.0
1.3/16	30.16	1.1875	19.0	R9501.3/16	R9601.3/16	R9701.3/16
	30.50	1.2008	19.0	R95030.5	R96030.5	R97030.5
1.7/32	30.96	1.2188	21.0	R9501.7/32		R9701.7/32
	31.00	1.2205	21.0	R95031.0		R97031.0
1.1/4	31.75	1.2500	21.0	R9501.1/4		R9701.1/4
	32.00	1.2598	21.0	R95032.0		R97032.0
	32.50	1.2795	21.0	R95032.5		R97032.5
1.19/64	32.94	1.2969	21.0	R9501.19/64		R9701.19/64
	33.00	1.2992	21.0	R95033.0		R97033.0
	33.50	1.3189	21.0	R95033.5		R97033.5
	34.00	1.3386	23.0	R95034.0		R97034.0
1.11/32	34.13	1.3438	23.0	R9501.11/32		R9701.11/32
	34.50	1.3583	23.0	R95034.5		R97034.5
1.3/8	34.93	1.3750	23.0	R9501.3/8		R9701.3/8
	35.00	1.3780	23.0	R95035.0		R97035.0
	36.00	1.4173	23.0	R95036.0		R97036.0
1.27/64	36.12	1.4219	23.0	R9501.27/64		R9701.27/64
	36.50	1.4370	23.0	R95036.5		R97036.5
	37.00	1.4567	25.0	R95037.0		R97037.0
1.15/32	37.31	1.4688	25.0	R9501.15/32		R9701.15/32
	37.50	1.4764	25.0	R95037.5		R97037.5
	38.00	1.4961	25.0	R95038.0		R97038.0
1.1/2	38.10	1.5000	25.0	R9501.1/2		R9701.1/2
	38.50	1.5157	25.0	R95038.5		R97038.5
1.17/32	38.89	1.5313	25.0	R9501.17/32		R9701.17/32
	39.00	1.5354	25.0	R95039.0		R97039.0
	39.50	1.5551	25.0	R95039.5		R97039.5
1.9/16	39.69	1.5625	27.0	R9501.9/16		R9701.9/16
	40.00	1.5748	27.0	R95040.0		R97040.0
	41.00	1.6142	27.0	R95041.0		R97041.0
1.5/8	41.28	1.6250	27.0	R9501.5/8		R9701.5/8
	42.00	1.6535	27.0	R95042.0		R97042.0

H853

- 天龙钻刀体 3 x D
- Corpos Hydra 3 x D
- Cuerpo Hydra 3 x D
- Hydra Body 3 x D

钻头刀体内包括 4 螺钉 H860 和 1 螺丝刀 H861
Quatro (4) parafusos H860 e uma (1) chave H861estão inclusos com o corpo da broca
Cuatro (4) tornillos H860 y un (1) destornillador H861 incluidos con cada cuerpo
Four (4) screws H860 and one (1) screwdriver H861 are included with a drill body

H855

- 天龙钻刀体 5 x D
- Corpos Hydra 5 x D
- Cuerpo Hydra 5 x D
- Hydra Body 5 x D

钻头刀体内包括 4 螺钉 H860 和 1 螺丝刀 H861
Quatro (4) parafusos H860 e uma (1) chave H861estão inclusos com o corpo da broca
Cuatro (4) tornillos H860 y un (1) destornillador H861 incluidos con cada cuerpo
Four (4) screws H860 and one (1) screwdriver H861 are included with a drill body

H858

- 天龙钻刀体 8 x D
- Corpos Hydra 8 x D
- Cuerpo Hydra 8 x D
- Hydra Body 8 x D

钻头刀体内包括 4 螺钉 H860 和 1 螺丝刀 H861
Quatro (4) parafusos H860 e uma (1) chave H861estão inclusos com o corpo da broca
Cuatro (4) tornillos H860 y un (1) destornillador H861 incluidos con cada cuerpo
Four (4) screws H860 and one (1) screwdriver H861 are included with a drill body

H853	HSS	DORMER	3XD			DIN 6535HB DIN 6535HE				
H855	HSS	DORMER	5XD			DIN 6535HB DIN 6535HE				
H858	HSS	DORMER	8XD			DIN 6535HE				

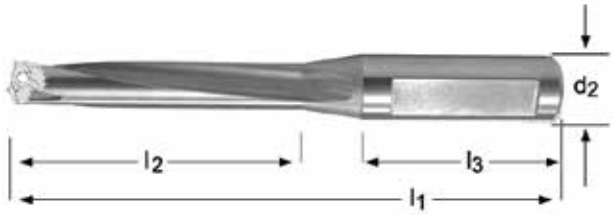

H853	H855	H858
		
15/32 - 42.00	15/32 - 30.50	15/32 - 42.00

d_2 $Øh_6$ Inch	d_2 $Øh_6$ mm	l_2 mm	l_1 mm	l_3 mm	DIN 6535HB DIN 6535HE	H853	H855	H858
	16.00	44.0	105.0	48.0	DIN6535HE	H85312.0		
	16.00	69.0	130.0	48.0	DIN6535HE		H85512.0	
5/8	15.88	44.0	105.0	48.0	DIN6535HE	H85331/64		
5/8	15.88	69.0	130.0	48.0	DIN6535HE		H85531/64	
	16.00	44.0	105.0	48.0	DIN6535HE	H85312.5		
	16.00	69.0	130.0	48.0	DIN6535HE		H85512.5	
5/8	15.88	44.0	105.0	48.0	DIN6535HE	H8531/2		
5/8	15.88	69.0	130.0	48.0	DIN6535HE		H8551/2	
	16.00	47.0	110.0	48.0	DIN6535HE	H85313.0		
	16.00	74.0	140.0	48.0	DIN6535HE		H85513.0	
5/8	15.88	47.0	110.0	48.0	DIN6535HE	H85317/32		
5/8	15.88	74.0	140.0	48.0	DIN6535HE		H85517/32	
	16.00	124.5	191.5	48.0	DIN6535HE			H85814.0
	16.00	52.5	116.5	48.0	DIN6535HE	H85314.0		
	16.00	81.5	146.5	48.0	DIN6535HE		H85514.0	
3/4	19.05	52.5	116.5	48.0	DIN6535HE	H8539/16		
3/4	19.05	81.5	146.5	48.0	DIN6535HE		H8559/16	
	20.00	133.5	201.5	50.0	DIN6535HE			H85815.0
	20.00	55.5	126.5	50.0	DIN6535HE	H85315.0		
	20.00	86.5	156.5	50.0	DIN6535HE		H85515.0	
3/4	19.05	55.5	126.5	50.0	DIN6535HE	H85339/64		
3/4	19.05	86.5	156.5	50.0	DIN6535HE		H85539/64	

DORMER

d_2 Øh_6 Inch	d_2 Øh_6 mm	l_2 mm	l_1 mm	l_3 mm	DIN 6535HB DIN 6535HE	H853	H855	H858
	20.00	141.5	211.5	50.0	DIN6535HE			H85816.0
	20.00	59.5	131.5	50.0	DIN6535HE	H85316.0		
	20.00	92.5	166.5	50.0	DIN6535HE		H85516.0	
3/4	19.05	59.5	131.5	50.0	DIN6535HE	H85341/64		
3/4	19.05	92.5	166.5	50.0	DIN6535HE		H85541/64	
	20.00	150.5	221.5	50.0	DIN6535HE			H85817.0
	20.00	62.5	136.5	50.0	DIN6535HE	H85317.0		
	20.00	97.5	171.5	50.0	DIN6535HE		H85517.0	
3/4	19.05	62.5	136.5	50.0	DIN6535HE	H85311/16		
3/4	19.05	97.5	171.5	50.0	DIN6535HE		H85511/16	
	20.00	158.5	226.5	50.0	DIN6535HE			H85818.0
	20.00	103.5	176.5	50.0	DIN6535HE		H85518.0	
	20.00	66.5	141.5	50.0	DIN6535HE	H85318.0		
3/4	19.05	103.5	176.5	50.0	DIN6535HE		H85523/32	
3/4	19.05	66.5	141.5	50.0	DIN6535HE	H85323/32		
	25.00	167.5	251.5	56.0	DIN6535HE			H85819.0
	25.00	108.5	191.5	56.0	DIN6535HE		H85519.0	
	25.00	69.5	156.5	56.0	DIN6535HE	H85319.0		
1”	25.40	108.5	191.5	56.0	DIN6535HE		H85549/64	
1”	25.40	69.5	156.5	56.0	DIN6535HE	H85349/64		
	25.00	175.5	264.5	56.0	DIN6535HE			H85820.0
	25.00	114.5	196.5	56.0	DIN6535HE		H85520.0	
	25.00	73.5	156.5	56.0	DIN6535HE	H85320.0		
1”	25.40	114.5	196.5	56.0	DIN6535HE		H85551/64	
1”	25.40	73.5	156.5	56.0	DIN6535HE	H85351/64		
	25.00	184.5	266.5	56.0	DIN6535HE			H85821.0
	25.00	119.5	196.5	56.0	DIN6535HE		H85521.0	
	25.00	76.5	156.5	56.0	DIN6535HE	H85321.0		
1”	25.40	119.5	196.5	56.0	DIN6535HE		H85527/32	
1”	25.40	76.5	156.5	56.0	DIN6535HE	H85327/32		
	25.00	192.1	271.1	56.0	DIN6535HE			H85822.0
	25.00	125.1	201.1	56.0	DIN6535HE		H85522.0	
	25.00	80.1	161.5	56.0	DIN6535HE	H85322.0		
1”	25.40	125.1	201.1	56.0	DIN6535HE		H85557/64	
1”	25.40	80.1	161.5	56.0	DIN6535HE	H85357/64		
	25.00	200.5	280.5	56.0	DIN6535HE			H85823.0
	25.00	129.5	210.5	56.0	DIN6535HE		H85523.0	
	25.00	82.5	160.5	56.0	DIN6535HE	H85323.0		
1”	25.40	129.5	210.5	56.0	DIN6535HE		H85559/64	
1”	25.40	82.5	160.5	56.0	DIN6535HE	H85359/64		
	32.00	208.2	295.2	60.0	DIN6535HE			H85824.0
	32.00	135.2	220.2	60.0	DIN6535HE		H85524.0	
	32.00	86.2	170.2	60.0	DIN6535HE	H85324.0		
1”	25.40	135.2	220.2	60.0	DIN6535HE		H85531/32	
1”	25.40	86.2	170.2	60.0	DIN6535HE	H85331/32		
	32.00	217.0	300.0	60.0	DIN6535HE			H85825.0
	32.00	140.0	225.0	60.0	DIN6535HE		H85525.0	
	32.00	88.0	170.0	60.0	DIN6535HE	H85325.0		
1.1/4	31.75	140.0	225.0	60.0	DIN6535HE		H8551.1/64	
1.1/4	31.75	88.0	170.0	60.0	DIN6535HE	H8531.1/64		
	32.00	225.0	310.0	60.0	DIN6535HE			H85826.0
	32.00	146.0	230.0	60.0	DIN6535HE		H85526.0	
	32.00	92.0	175.0	60.0	DIN6535HE	H85326.0		
1.1/4	31.75	146.0	230.0	60.0	DIN6535HE		H8551.3/64	
1.1/4	31.75	92.0	175.0	60.0	DIN6535HE	H8531.3/64		
	32.00	234.0	320.0	60.0	DIN6535HE			H85827.0
	32.00	151.0	235.0	60.0	DIN6535HE		H85527.0	
	32.00	94.0	175.0	60.0	DIN6535HE	H85327.0		
1.1/4	31.75	151.0	235.0	60.0	DIN6535HE		H8551.3/32	
1.1/4	31.75	94.0	175.0	60.0	DIN6535HE	H8531.3/32		
	32.00	242.0	325.0	60.0	DIN6535HE			H85828.0
	32.00	157.0	240.0	60.0	DIN6535HE		H85528.0	
	32.00	97.0	180.0	60.0	DIN6535HE	H85328.0		
1.1/4	31.75	157.0	240.0	60.0	DIN6535HE		H8551.1/8	
1.1/4	31.75	97.0	180.0	60.0	DIN6535HE	H8531.1/8		
	32.00	251.0	335.0	60.0	DIN6535HE			H85829.0
	32.00	100.0	185.0	60.0	DIN6535HE	H85329.0		
	32.00	162.0	245.0	60.0	DIN6535HE		H85529.0	
1.1/4	31.75	100.0	185.0	60.0	DIN6535HE	H8531.11/64		
1.1/4	31.75	162.0	245.0	60.0	DIN6535HE		H8551.11/64	
	32.00	259.0	345.0	60.0	DIN6535HE			H85830.0
	32.00	104.0	185.0	60.0	DIN6535HE	H85330.0		
	32.00	167.0	255.0	60.0	DIN6535HE		H85530.0	
1.1/4	31.75	104.0	185.0	60.0	DIN6535HE	H8531.3/16		
1.1/4	31.75	167.0	255.0	60.0	DIN6535HE		H8551.3/16	
	32.00	176.5	261.5	60.0	DIN6535HE		H85532.0	

d_2 Øh$_6$ Inch	d_2 Øh$_6$ mm	l_2 mm	l_1 mm	l_3 mm	DIN 6535HB DIN 6535HE	H853	H855	H858
	32.00	271.5	356.5	60.0	DIN6535HE			H85832.0
	32.00	111.5	196.5	60.0	DIN6535HE	H85332.0		
	40.00	186.5	271.5	60.0	DIN6535HB		H85533.5	
	40.00	286.5	371.5	60.0	DIN6535HB			H85833.5
	40.00	116.5	201.5	60.0	DIN6535HB	H85333.5		
	40.00	196.5	291.5	70.0	DIN6535HB		H85535.0	
	40.00	301.5	396.5	70.0	DIN6535HB			H85835.0
	40.00	121.5	216.5	70.0	DIN6535HB	H85335.0		
	40.00	201.5	296.5	70.0	DIN6535HB		H85536.5	
	40.00	311.5	406.5	70.0	DIN6535HB			H85836.5
	40.00	125.5	221.5	70.0	DIN6535HB	H85336.5		
	40.00	211.5	306.5	70.0	DIN6535HB		H85538.0	
	40.00	326.5	421.5	70.0	DIN6535HB			H85838.0
	40.00	131.5	226.5	70.0	DIN6535HB	H85338.0		
	40.00	221.5	316.5	70.0	DIN6535HB		H85539.5	
	40.00	336.5	431.5	70.0	DIN6535HB			H85839.5
	40.00	136.5	231.5	70.0	DIN6535HB	H85339.5		
	40.00	226.5	325.6	70.0	DIN6535HB		H85541.0	
	40.00	351.5	451.5	70.0	DIN6535HB			H85841.0
	40.00	146.5	246.5	70.0	DIN6535HB	H85341.0		
	40.00	236.5	336.5	70.0	DIN6535HB		H85542.5	
	40.00	361.5	461.5	70.0	DIN6535HB			H85842.5
	40.00	151.6	251.6	70.0	DIN6535HB	H85342.5		

H860

- 天龙钻用螺钉
- Hydra parafusos
- Hydra tornillos
- Hydra Screws

钻头刀体内包括 4 螺钉 H860 和 1 螺丝刀 H861
Quatro (4) parafusos H860 e uma (1) chave H861estão inclusos com o corpo da broca
Cuatro (4) tornillos H860 y un (1) destornillador H861 incluidos con cada cuerpo
Four (4) screws H860 and one (1) screwdriver H861 are included with a drill body

H861

- 天龙钻用螺丝刀
- Hydra chave
- Hydra destornillador
- Hydra Screwdriver

钻头刀体内包括 4 螺钉 H860 和 1 螺丝刀 H861
Quatro (4) parafusos H860 e uma (1) chave H861estão inclusos com o corpo da broca
Cuatro (4) tornillos H860 y un (1) destornillador H861 incluidos con cada cuerpo
Four (4) screws H860 and one (1) screwdriver H861 are included with a drill body

H860	H861
	
N1 - N7	N1 - N6

H860	H861
H860N7	H861N6
H860N6	H861N5
H860N5	H861N4
H860N4	H861N3
H860N3	
H860N2	H861N2
H860N1	H861N1

R200

- 中心钻 - 60°
- Broca de Centrar - 60°
- Brocas de Centrar - 60°
- Centre Drill - 60°

R200	▪	1.1	1.2	1.3	1.4	1.5	1.6	3.1	3.2	3.3	3.4	6.1	6.2	6.3	6.4	7.1	7.2	7.3	7.4

R200

R200

1.00 - 5.00

d_1 Ø mm	d_1 decimal Inch	l_2 max/min mm	l_1 mm	d_2 Ø mm	R200
1.00	0.0394	1.7 - 1.3	31	3.15	R2001.0X3.15
1.25	0.0492	2.0 - 1.6	31	3.15	R2001.25X3.15
1.60	0.0630	2.6 - 2.0	35	4.00	R2001.6X4.0
2.00	0.0787	3.1 - 2.5	40	5.00	R2002.0X5.0
2.50	0.0984	3.8 - 3.1	45	6.30	R2002.5X6.3
3.15	0.1240	4.6 - 3.9	50	8.00	R2003.15X8.0
4.00	0.1575	5.9 - 5.0	55	10.00	R2004.0X10.0
5.00	0.1969	7.2 - 6.3	63	12.50	R2005.0X12.5

DORMER

R122

- 定心钻 - 120°
- Broca de Pontear - 120°
- Broca corta para centrados - 120°
- Short Spotting Drill - 120°

不大于10.0 mm 为 4 后面钻尖
Ponta de Quatro Facetas até 10mm
Punta de cuatro caras hasta 10,0mm
Four Facet Point upto 10,0mm

R123

- 定心钻 - 90°
- Broca de Pontear - 90°
- Broca corta para centrados - 90°
- Short Spotting Drill - 90°

不大于10.0 mm 为 4 后面钻尖
Ponta de Quatro Facetas até 10mm
Punta de cuatro caras hasta 10,0mm
Four Facet Point upto 10,0mm

R6011

- 定心钻 - 90°
- Broca para furo guia - 90°
- Broca para centrados - 90°
- Spotting Drill - 90°

TiAlN涂层
Revestido com TiAlN
Recibrimiento TiAlN
TiAlN Coated

R122; R123; R6011 ▪	1.1	1.2	1.3	1.4	1.5	1.6	1.7	1.8	2.1	2.2	3.1	3.2	3.3	3.4	4.1	4.2
	4.3	5.1	5.2	5.3	6.1	6.2	6.3	6.4	7.1	7.2	7.3	7.4	8.1	8.2		
R122	HM	DORMER	1XD	120°			N									
R123	HM	DORMER	1XD	90°			N									
R6011	HM	DORMER	1XD	90°	TiAlN	DIN 6535HA	N									

R122	R123	R6011
		NEW 
5.00 - 20.00	5.00 - 20.00	6.00 - 16.00

d_1 Øh_6 mm	d_1 decimal Inch	l_2 mm	l_1 mm	R122	R123	R6011
5.00	0.1969	16	62	R1225.0	R1235.0	
6.00	0.2362	16	50			R60116.0
6.00	0.2362	17	66	R1226.0	R1236.0	
8.00	0.3150	22	79	R1228.0	R1238.0	
10.00	0.3937	25	70			R601110.0
10.00	0.3937	26	89	R12210.0	R12310.0	
12.00	0.4724	30	102	R12212.0	R12312.0	
16.00	0.6299	26	90			R601116.0
16.00	0.6299	34	115	R12216.0	R12316.0	
20.00	0.7874	40	131	R12220.0	R12320.0	

R7131

- 攻丝预钻孔钻头
- Broca de chanfro para furos de pré-roscagem
- Broca con chaflán para agujero previo
- Chamfer drill for pre-tapping holes

R7131	▪	1.1	1.2	1.3	1.4	1.5	2.1	2.2	2.3	3.1	3.2	3.3	3.4	6.1	6.2	6.3	6.4	7.1	7.2	7.3	7.4

R7131 HM DORMER 3XD 140° TiAlN DIN 6535HA N

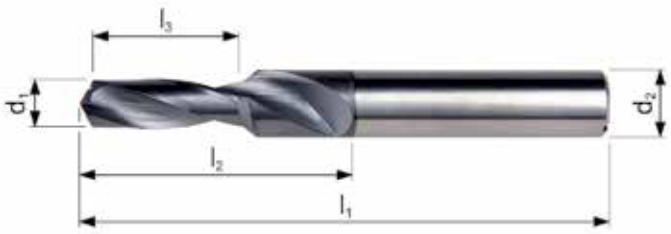

R7131

3.30 - 10.40

d_1 Øm_7 mm	d_1 decimal Inch	l_3 mm	l_2 mm	l_1 mm	d_2 Øh_6 mm	M	R7131
3.30	0.1299	11.4	20	66	6	M4	R71313.3
4.20	0.1654	13.6	24	66	6	M5	R71314.2
5.00	0.1969	16.5	28	79	8	M6	R71315.0
6.80	0.2677	21.0	34	89	10	M8	R71316.8
8.50	0.3346	25.5	47	102	12	M10	R71318.5
10.20	0.4016	30.0	55	107	14	M12	R713110.2
10.40	0.4094	30.0	55	107	14	M12	R713110.4

DORMER

R120

- 短型钻头
- Broca Serie Curta
- Broca extra corta
- Stub Drill

R120 ▪ 4.1 5.1 6.1 7.1 8.1 8.2

• 1.1 1.2 1.3 1.4 1.5 1.6 1.7 1.8 3.1 3.2 3.3 3.4 4.2 4.3 5.2 5.3 6.2 6.3 6.4 7.2 7.3 7.4

R120 HM | DIN 6539 | 2.5XD | 120° | N

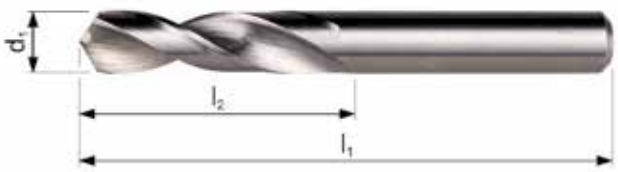

R120

1.00 - 12.00

d_1 Øh_7 mm	d_1 decimal Inch	l_2 mm	l_1 mm	R120
1.00	0.0394	6	26	R1201.0
1.10	0.0433	7	28	R1201.1
1.20	0.0472	8	30	R1201.2
1.30	0.0512	8	30	R1201.3
1.40	0.0551	9	32	R1201.4
1.50	0.0591	9	32	R1201.5
1.60	0.0630	10	34	R1201.6
1.70	0.0669	10	34	R1201.7
1.80	0.0709	11	36	R1201.8
1.90	0.0748	11	36	R1201.9
2.00	0.0787	12	38	R1202.0
2.10	0.0827	12	38	R1202.1
2.20	0.0866	13	40	R1202.2
2.30	0.0906	13	40	R1202.3
2.40	0.0945	14	43	R1202.4
2.50	0.0984	14	43	R1202.5
2.60	0.1024	14	43	R1202.6
2.70	0.1063	16	46	R1202.7
2.80	0.1102	16	46	R1202.8
2.90	0.1142	16	46	R1202.9
3.00	0.1181	16	46	R1203.0
3.10	0.1220	18	49	R1203.1
3.20	0.1260	18	49	R1203.2
3.30	0.1299	18	49	R1203.3
3.40	0.1339	20	52	R1203.4
3.50	0.1378	20	52	R1203.5
3.60	0.1417	20	52	R1203.6
3.70	0.1457	20	52	R1203.7
3.80	0.1496	22	55	R1203.8
3.90	0.1535	22	55	R1203.9
4.00	0.1575	22	55	R1204.0
4.10	0.1614	22	55	R1204.1
4.20	0.1654	22	55	R1204.2
4.30	0.1693	24	58	R1204.3
4.40	0.1732	24	58	R1204.4
4.50	0.1772	24	58	R1204.5
4.60	0.1811	24	58	R1204.6
4.70	0.1850	24	58	R1204.7

d_1 Øh_7 mm	d_1 decimal Inch	l_2 mm	l_1 mm	R120
4.80	0.1890	26	62	R1204.8
4.90	0.1929	26	62	R1204.9
5.00	0.1969	26	62	R1205.0
5.10	0.2008	26	62	R1205.1
5.20	0.2047	26	62	R1205.2
5.30	0.2087	26	62	R1205.3
5.40	0.2126	28	66	R1205.4
5.50	0.2165	28	66	R1205.5
5.60	0.2205	28	66	R1205.6
5.70	0.2244	28	66	R1205.7
5.80	0.2283	28	66	R1205.8
5.90	0.2323	28	66	R1205.9
6.00	0.2362	28	66	R1206.0
6.10	0.2402	31	70	R1206.1
6.20	0.2441	31	70	R1206.2
6.30	0.2480	31	70	R1206.3
6.40	0.2520	31	70	R1206.4
6.50	0.2559	31	70	R1206.5
6.60	0.2598	31	70	R1206.6
6.70	0.2638	31	70	R1206.7
6.80	0.2677	34	74	R1206.8
6.90	0.2717	34	74	R1206.9
7.00	0.2756	34	74	R1207.0
7.10	0.2795	34	74	R1207.1
7.20	0.2835	34	74	R1207.2
7.30	0.2874	34	74	R1207.3
7.40	0.2913	34	74	R1207.4
7.50	0.2953	34	74	R1207.5
7.60	0.2992	37	79	R1207.6
7.70	0.3031	37	79	R1207.7
7.80	0.3071	37	79	R1207.8
7.90	0.3110	37	79	R1207.9
8.00	0.3150	37	79	R1208.0
8.10	0.3189	37	79	R1208.1
8.20	0.3228	37	79	R1208.2
8.30	0.3268	37	79	R1208.3
8.40	0.3307	37	79	R1208.4
8.50	0.3346	37	79	R1208.5
8.60	0.3386	40	84	R1208.6
8.70	0.3425	40	84	R1208.7
8.80	0.3465	40	84	R1208.8
8.90	0.3504	40	84	R1208.9
9.00	0.3543	40	84	R1209.0
9.10	0.3583	40	84	R1209.1
9.20	0.3622	40	84	R1209.2
9.30	0.3661	40	84	R1209.3
9.40	0.3701	40	84	R1209.4
9.50	0.3740	40	84	R1209.5
9.60	0.3780	43	89	R1209.6
9.70	0.3819	43	89	R1209.7
9.80	0.3858	43	89	R1209.8
9.90	0.3898	43	89	R1209.9
10.00	0.3937	43	89	R12010.0
10.20	0.4016	43	89	R12010.2
10.50	0.4134	43	89	R12010.5
11.00	0.4331	47	95	R12011.0
11.50	0.4528	47	95	R12011.5
12.00	0.4724	51	102	R12012.0

DORMER

R100

- 普通长度钻头
- Broca Série normal
- Broca , serie corta
- Jobber Drill

R100		
	▪	6.2 6.3 8.1 8.2
	•	1.1 1.2 1.3 1.4 1.5 1.6 1.7 1.8 3.1 3.2 3.3 3.4 7.1 7.2 7.3 7.4

R100 HM DIN 338 4XD 120° N

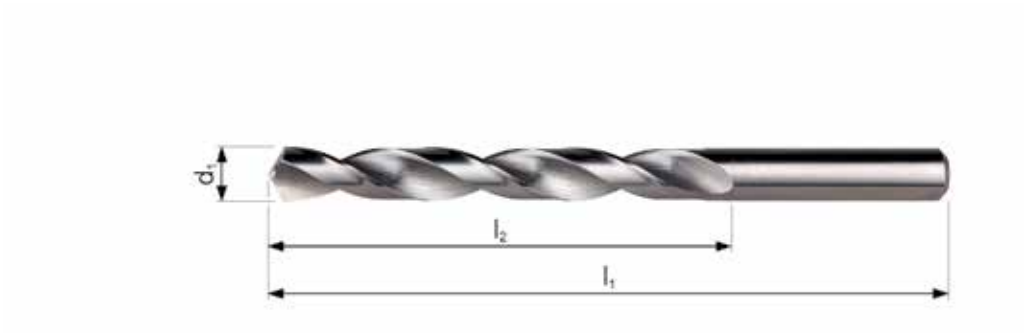

R100

1.00 - 14.00

d_1 Øh_7 mm	d_1 decimal Inch	l_2 mm	l_1 mm	R100
1.00	0.0394	12	34	R1001.0
1.10	0.0433	14	36	R1001.1
1.20	0.0472	16	38	R1001.2
1.30	0.0512	16	38	R1001.3
1.40	0.0551	18	40	R1001.4
1.50	0.0591	18	40	R1001.5
1.60	0.0630	20	43	R1001.6
1.70	0.0669	20	43	R1001.7
1.80	0.0709	22	46	R1001.8
1.90	0.0748	22	46	R1001.9
2.00	0.0787	24	49	R1002.0
2.10	0.0827	24	49	R1002.1
2.20	0.0866	27	53	R1002.2
2.30	0.0906	27	53	R1002.3
2.40	0.0945	30	57	R1002.4
2.50	0.0984	30	57	R1002.5
2.60	0.1024	30	57	R1002.6
2.70	0.1063	33	61	R1002.7
2.80	0.1102	33	61	R1002.8
2.90	0.1142	33	61	R1002.9
3.00	0.1181	33	61	R1003.0
3.10	0.1220	36	65	R1003.1
3.20	0.1260	36	65	R1003.2
3.30	0.1299	36	65	R1003.3
3.40	0.1339	39	70	R1003.4
3.50	0.1378	39	70	R1003.5
3.60	0.1417	39	70	R1003.6
3.70	0.1457	39	70	R1003.7
3.80	0.1496	43	75	R1003.8
3.90	0.1535	43	75	R1003.9
4.00	0.1575	43	75	R1004.0
4.10	0.1614	43	75	R1004.1
4.20	0.1654	43	75	R1004.2
4.30	0.1693	47	80	R1004.3
4.40	0.1732	47	80	R1004.4
4.50	0.1772	47	80	R1004.5
4.60	0.1811	47	80	R1004.6
4.70	0.1850	47	80	R1004.7

d_1 Øh_7 mm	d_1 decimal Inch	l_2 mm	l_1 mm	R100
4.80	0.1890	52	86	R1004.8
4.90	0.1929	52	86	R1004.9
5.00	0.1969	52	86	R1005.0
5.10	0.2008	52	86	R1005.1
5.20	0.2047	52	86	R1005.2
5.30	0.2087	52	86	R1005.3
5.40	0.2126	57	93	R1005.4
5.50	0.2165	57	93	R1005.5
5.60	0.2205	57	93	R1005.6
5.70	0.2244	57	93	R1005.7
5.80	0.2283	57	93	R1005.8
5.90	0.2323	57	93	R1005.9
6.00	0.2362	57	93	R1006.0
6.10	0.2402	63	101	R1006.1
6.20	0.2441	63	101	R1006.2
6.30	0.2480	63	101	R1006.3
6.40	0.2520	63	101	R1006.4
6.50	0.2559	63	101	R1006.5
6.60	0.2598	63	101	R1006.6
6.70	0.2638	63	101	R1006.7
6.80	0.2677	69	109	R1006.8
6.90	0.2717	69	109	R1006.9
7.00	0.2756	69	109	R1007.0
7.10	0.2795	69	109	R1007.1
7.20	0.2835	69	109	R1007.2
7.30	0.2874	69	109	R1007.3
7.40	0.2913	69	109	R1007.4
7.50	0.2953	69	109	R1007.5
7.60	0.2992	75	117	R1007.6
7.70	0.3031	75	117	R1007.7
7.80	0.3071	75	117	R1007.8
7.90	0.3110	75	117	R1007.9
8.00	0.3150	75	117	R1008.0
8.10	0.3189	75	117	R1008.1
8.20	0.3228	75	117	R1008.2
8.30	0.3268	75	117	R1008.3
8.40	0.3307	75	117	R1008.4
8.50	0.3346	75	117	R1008.5
8.60	0.3386	81	125	R1008.6
8.70	0.3425	81	125	R1008.7
8.80	0.3465	81	125	R1008.8
8.90	0.3504	81	125	R1008.9
9.00	0.3543	81	125	R1009.0
9.10	0.3583	81	125	R1009.1
9.20	0.3622	81	125	R1009.2
9.30	0.3661	81	125	R1009.3
9.40	0.3701	81	125	R1009.4
9.50	0.3740	81	125	R1009.5
9.60	0.3780	87	133	R1009.6
9.70	0.3819	87	133	R1009.7
9.80	0.3858	87	133	R1009.8
9.90	0.3898	87	133	R1009.9
10.00	0.3937	87	133	R10010.0
10.20	0.4016	87	133	R10010.2
10.50	0.4134	87	133	R10010.5
11.00	0.4331	94	142	R10011.0
11.50	0.4528	94	142	R10011.5
12.00	0.4724	101	151	R10012.0
13.00	0.5118	101	151	R10013.0
14.00	0.5512	108	160	R10014.0

DORMER

R520

- CDX 短型钻头
- Broca CDX Serie Extra Curta
- Broca CDX , serie extra corta
- CDX Stub Drill

R520																		
▪	1.1	1.2	1.3	1.4	1.5	1.6	3.1	3.2	3.3	3.4	5.1	7.1	7.2	7.3	7.4	8.1	8.2
•	1.7	1.8	2.1	4.1	4.2	4.3											

R520 HM DIN 6539 2.5XD 130° TiN N

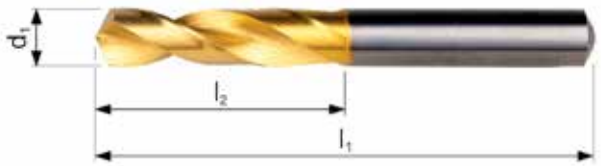

R520

3.00 - 16.50

d_1 Øh7 Inch	d_1 Øh7 mm	d_1 decimal Inch	l_2 mm	l_1 mm	R520
	3.00	0.1181	16	46	R5203.0
	3.10	0.1220	18	49	R5203.1
1/8	3.18	0.1252	18	49	R5201/8
	3.20	0.1260	18	49	R5203.2
	3.30	0.1299	18	49	R5203.3
	3.40	0.1339	20	52	R5203.4
	3.50	0.1378	20	52	R5203.5
	3.60	0.1417	20	52	R5203.6
	3.70	0.1457	20	52	R5203.7
	3.80	0.1496	22	55	R5203.8
	3.90	0.1535	22	55	R5203.9
	4.00	0.1575	22	55	R5204.0
	4.10	0.1614	22	55	R5204.1
	4.20	0.1654	22	55	R5204.2
	4.30	0.1693	24	58	R5204.3
	4.40	0.1732	24	58	R5204.4
	4.50	0.1772	24	58	R5204.5
	4.60	0.1811	24	58	R5204.6
	4.70	0.1850	24	58	R5204.7
	4.80	0.1890	26	62	R5204.8
	4.90	0.1929	26	62	R5204.9
	5.00	0.1969	26	62	R5205.0
	5.10	0.2008	26	62	R5205.1
	5.20	0.2047	26	62	R5205.2
	5.30	0.2087	26	62	R5205.3
	5.40	0.2126	28	66	R5205.4
	5.50	0.2165	28	66	R5205.5
	5.60	0.2205	28	66	R5205.6
	5.70	0.2244	28	66	R5205.7
	5.80	0.2283	28	66	R5205.8
	5.90	0.2323	28	66	R5205.9
	6.00	0.2362	28	66	R5206.0
	6.10	0.2402	31	70	R5206.1
	6.20	0.2441	31	70	R5206.2
	6.30	0.2480	31	70	R5206.3
1/4	6.35	0.2500	31	70	R5201/4
	6.40	0.2520	31	70	R5206.4
	6.50	0.2559	31	70	R5206.5

d_1 Øh_7 Inch	d_1 Øh_7 mm	d_1 decimal Inch	l_2 mm	l_1 mm	R520
	6.60	0.2598	31	70	R5206.6
	6.70	0.2638	31	70	R5206.7
	6.80	0.2677	34	74	R5206.8
	6.90	0.2717	34	74	R5206.9
	7.00	0.2756	34	74	R5207.0
	7.10	0.2795	34	74	R5207.1
	7.20	0.2835	34	74	R5207.2
	7.30	0.2874	34	74	R5207.3
	7.40	0.2913	34	74	R5207.4
	7.50	0.2953	34	74	R5207.5
	7.60	0.2992	37	79	R5207.6
	7.70	0.3031	37	79	R5207.7
	7.80	0.3071	37	79	R5207.8
	7.90	0.3110	37	79	R5207.9
5/16	7.94	0.3126	37	79	R5205/16
	8.00	0.3150	37	79	R5208.0
	8.10	0.3189	37	79	R5208.1
	8.20	0.3228	37	79	R5208.2
	8.30	0.3268	37	79	R5208.3
	8.40	0.3307	37	79	R5208.4
	8.50	0.3346	37	79	R5208.5
	8.60	0.3386	40	84	R5208.6
	8.70	0.3425	40	84	R5208.7
	8.80	0.3465	40	84	R5208.8
	8.90	0.3504	40	84	R5208.9
	9.00	0.3543	40	84	R5209.0
	9.10	0.3583	40	84	R5209.1
	9.20	0.3622	40	84	R5209.2
	9.30	0.3661	40	84	R5209.3
	9.40	0.3701	40	84	R5209.4
	9.50	0.3740	40	84	R5209.5
3/8	9.52	0.3748	43	89	R5203/8
	9.60	0.3780	43	89	R5209.6
	9.70	0.3819	43	89	R5209.7
	9.80	0.3858	43	89	R5209.8
	9.90	0.3898	43	89	R5209.9
	10.00	0.3937	43	89	R52010.0
	10.10	0.3976	43	89	R52010.1
	10.20	0.4016	43	89	R52010.2
	10.30	0.4055	43	89	R52010.3
	10.40	0.4094	43	89	R52010.4
	10.50	0.4134	43	89	R52010.5
	11.00	0.4331	47	95	R52011.0
7/16	11.11	0.4374	47	95	R5207/16
	11.20	0.4409	47	95	R52011.2
	11.50	0.4528	47	95	R52011.5
	12.00	0.4724	51	102	R52012.0
	12.50	0.4921	51	102	R52012.5
1/2	12.70	0.5000	51	102	R5201/2
	13.00	0.5118	51	102	R52013.0
	13.50	0.5315	54	107	R52013.5
	14.00	0.5512	54	107	R52014.0
	14.20	0.5591	56	111	R52014.2
	14.25	0.5610	56	111	R52014.25
	14.50	0.5709	56	111	R52014.5
	15.00	0.5906	56	111	R52015.0
	15.10	0.5945	58	115	R52015.1
5/8	15.88	0.6252	58	115	R5205/8
	16.00	0.6299	58	115	R52016.0
	16.50	0.6496	60	119	R52016.5

DORMER

R510

- CDX 普通长度钻头
- Broca CDX Serie Normal
- Broca CDX , serie corta
- CDX Jobber Drill

R510																
▪	1.1	1.2	1.3	1.4	1.5	1.6	3.1	3.2	3.3	3.4	7.1	7.2	7.3	7.4	8.1	8.2
•	1.7	1.8	2.1	4.1	5.1											

R510 HM | DIN 338 | 4XD | 130° | TiN | N

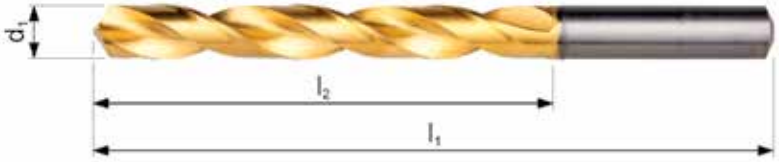

R510

CDX

3.00 - 14.25

d_1 Øh_7 Inch	d_1 Øh_7 mm	d_1 decimal Inch	l_2 mm	l_1 mm	R510
	3.00	0.1181	33	61	R5103.0
1/8	3.18	0.1252	36	65	R5101/8
	3.20	0.1260	36	65	R5103.2
	3.30	0.1299	36	65	R5103.3
	3.40	0.1339	39	70	R5103.4
	3.50	0.1378	39	70	R5103.5
	3.70	0.1457	39	70	R5103.7
	3.90	0.1535	43	75	R5103.9
	4.00	0.1575	43	75	R5104.0
	4.10	0.1614	43	75	R5104.1
	4.20	0.1654	43	75	R5104.2
	4.30	0.1693	47	80	R5104.3
	4.50	0.1772	47	80	R5104.5
	4.60	0.1811	47	80	R5104.6
	4.70	0.1850	47	80	R5104.7
3/16	4.76	0.1874	52	86	R5103/16
	4.90	0.1929	52	86	R5104.9
	5.00	0.1969	52	86	R5105.0
	5.10	0.2008	52	86	R5105.1
	5.50	0.2165	57	93	R5105.5
	5.60	0.2205	57	93	R5105.6
	5.70	0.2244	57	93	R5105.7
	6.00	0.2362	57	93	R5106.0
1/4	6.35	0.2500	63	101	R5101/4
	6.50	0.2559	63	101	R5106.5
	6.60	0.2598	63	101	R5106.6
	6.80	0.2677	69	109	R5106.8
	6.90	0.2717	69	109	R5106.9
	7.00	0.2756	69	109	R5107.0
	7.30	0.2874	69	109	R5107.3
	7.40	0.2913	69	109	R5107.4
	7.50	0.2953	69	109	R5107.5
	7.80	0.3071	75	117	R5107.8
	7.90	0.3110	75	117	R5107.9
5/16	7.94	0.3126	75	117	R5105/16
	8.00	0.3150	75	117	R5108.0

d_1 Øh_7 Inch	d_1 Øh_7 mm	d_1 decimal Inch	l_2 mm	l_1 mm	R510
	8.50	0.3346	75	117	R5108.5
	8.70	0.3425	81	125	R5108.7
	8.80	0.3465	81	125	R5108.8
	9.00	0.3543	81	125	R5109.0
	9.20	0.3622	81	125	R5109.2
	9.30	0.3661	81	125	R5109.3
	9.40	0.3701	81	125	R5109.4
	9.50	0.3740	81	125	R5109.5
3/8	9.52	0.3748	87	133	R5103/8
	9.90	0.3898	87	133	R5109.9
	10.00	0.3937	87	133	R51010.0
	10.20	0.4016	87	133	R51010.2
	10.30	0.4055	87	133	R51010.3
	10.40	0.4094	87	133	R51010.4
	10.50	0.4134	87	133	R51010.5
	10.80	0.4252	94	142	R51010.8
	11.00	0.4331	94	142	R51011.0
7/16	11.11	0.4374	94	142	R5107/16
	11.20	0.4409	94	142	R51011.2
	11.50	0.4528	94	142	R51011.5
	12.00	0.4724	101	151	R51012.0
1/2	12.70	0.5000	101	151	R5101/2
	13.00	0.5118	101	151	R51013.0
	14.00	0.5512	108	160	R51014.0
	14.25	0.5610	114	169	R51014.25

DORMER

R458

- Force-X 无内冷钻头 3XD
- Broca Force-X Serie Curta 3XD
- Broca corta - Force-X 3XD
- Force X Drill 3XD

R457

- Force-X 内冷钻头 3XD
- Broca Force-X com refrigeração interna 3XD
- Broca - Force-X - Refrigeración interna 3XD
- Force X Drill Oil Feed 3XD

R458	▪	1.1 1.2 1.3 1.4 1.5 1.6 1.7 1.8 2.1 2.2 2.3 3.1 3.2 3.3 3.4 6.1 6.2 6.3 7.1 7.2 7.3 7.4
	•	2.4 4.1 4.2 4.3 6.4
R457	▪	1.1 1.2 1.3 1.4 1.5 1.6 1.7 1.8 2.1 2.2 2.3 3.1 3.2 3.3 3.4 4.1 4.2 4.3 6.1 6.2 6.3 6.4 7.1 7.2 7.3 7.4

R458	HM	DIN 6537 K	3XD	140°	TiAlN	DIN 6535HA	CTW			
R457	HM	DIN 6537 K	3XD	140°	TiAlN	DIN 6535HA	CTW			

d_1 Ø "/Nr.	d_1 Øm_7 mm	d_1 decimal Inch	l_2 mm	l_1 mm	l_3 mm	d_2 Øh_6 mm	R458	R457
	3.00	0.1181	20	62	36	6	R4583.0	R4573.0
	3.10	0.1220	20	62	36	6	R4583.1	R4573.1
1/8	3.18	0.1252	20	62	36	6	R4581/8	R4571/8
	3.20	0.1260	20	62	36	6	R4583.2	R4573.2
30	3.26	0.1283	20	62	36	6	R458N30	R457N30
	3.30	0.1299	20	62	36	6	R4583.3	R4573.3
	3.40	0.1339	20	62	36	6	R4583.4	R4573.4
29	3.45	0.1358	20	62	36	6	R458N29	R457N29
	3.50	0.1378	20	62	36	6	R4583.5	R4573.5
28	3.57	0.1406	20	62	36	6	R458N28	R457N28
9/64	3.57	0.1406	20	62	36	6	R4589/64	R4579/64
	3.60	0.1417	20	62	36	6	R4583.6	R4573.6
27	3.66	0.1441	20	62	36	6	R458N27	R457N27
	3.70	0.1457	20	62	36	6	R4583.7	R4573.7
	3.73	0.1469	24	66	36	6	R4583.73	
26	3.73	0.1469	24	66	36	6	R458N26	R457N26
	3.80	0.1496	24	66	36	6	R4583.8	R4573.8
25	3.80	0.1496	24	66	36	6	R458N25	R457N25
24	3.86	0.1520	24	66	36	6	R458N24	R457N24
	3.90	0.1535	24	66	36	6	R4583.9	R4573.9
23	3.91	0.1539	24	66	36	6	R458N23	R457N23
5/32	3.97	0.1563	24	66	36	6	R4585/32	R4575/32
22	3.99	0.1571	24	66	36	6	R458N22	R457N22
	4.00	0.1575	24	66	36	6	R4584.0	R4574.0

d_1 Ø "/Nr.	d_1 Øm_7 mm	d_1 decimal Inch	l_2 mm	l_1 mm	l_3 mm	d_2 Øh_6 mm	R458	R457
21	4.04	0.1591	24	66	36	6	R458N21	R457N21
	4.05	0.1594	24	66	36	6		R4574.05
20	4.09	0.1610	24	66	36	6	R458N20	R457N20
	4.10	0.1614	24	66	36	6	R4584.1	R4574.1
	4.20	0.1654	24	66	36	6	R4584.2	R4574.2
19	4.22	0.1661	24	66	36	6	R458N19	R457N19
	4.30	0.1693	24	66	36	6	R4584.3	R4574.3
18	4.31	0.1697	24	66	36	6	R458N18	R457N18
11/64	4.37	0.1720	24	66	36	6	R45811/64	R45711/64
17	4.39	0.1728	24	66	36	6	R458N17	R457N17
	4.40	0.1732	24	66	36	6	R4584.4	R4574.4
16	4.50	0.1772	24	66	36	6	R458N16	R457N16
	4.50	0.1772	24	66	36	6	R4584.5	R4574.5
15	4.57	0.1799	24	66	36	6	R458N15	R457N15
	4.60	0.1811	24	66	36	6	R4584.6	R4574.6
14	4.62	0.1819	24	66	36	6	R458N14	R457N14
	4.70	0.1850	24	66	36	6	R4584.7	R4574.7
13	4.70	0.1850	24	66	36	6	R458N13	R457N13
3/16	4.76	0.1874	28	66	36	6	R4583/16	R4573/16
	4.80	0.1890	28	66	36	6	R4584.8	R4574.8
12	4.80	0.1890	28	66	36	6	R458N12	R457N12
11	4.85	0.1909	28	66	36	6	R458N11	R457N11
	4.90	0.1929	28	66	36	6	R4584.9	R4574.9
10	4.92	0.1937	28	66	36	6	R458N10	R457N10
9	4.98	0.1961	28	66	36	6	R458N9	R457N9
	5.00	0.1969	28	66	36	6	R4585.0	R4575.0
	5.05	0.1988	28	66	36	6		R4575.05
8	5.06	0.1992	28	66	36	6	R458N8	R457N8
	5.10	0.2008	28	66	36	6	R4585.1	R4575.1
7	5.11	0.2012	28	66	36	6	R458N7	R457N7
13/64	5.16	0.2031	28	66	36	6	R45813/64	R45713/64
6	5.18	0.2039	28	66	36	6	R458N6	R457N6
	5.20	0.2047	28	66	36	6	R4585.2	R4575.2
5	5.22	0.2055	28	66	36	6	R458N5	R457N5
	5.30	0.2087	28	66	36	6	R4585.3	R4575.3
4	5.31	0.2091	28	66	36	6	R458N4	R457N4
	5.40	0.2126	28	66	36	6	R4585.4	R4575.4
3	5.41	0.2130	28	66	36	6	R458N3	R457N3
	5.50	0.2165	28	66	36	6	R4585.5	R4575.5
7/32	5.56	0.2189	28	66	36	6	R4587/32	R4577/32
	5.60	0.2205	28	66	36	6	R4585.6	R4575.6
2	5.61	0.2209	28	66	36	6	R458N2	R457N2
	5.70	0.2244	28	66	36	6	R4585.7	R4575.7
1	5.79	0.2280	28	66	36	6	R458N1	R457N1
	5.80	0.2283	28	66	36	6	R4585.8	R4575.8
	5.90	0.2323	28	66	36	6	R4585.9	R4575.9
A	5.94	0.2339	28	66	36	6	R458A	R457A
15/64	5.95	0.2343	28	66	36	6	R45815/64	R45715/64
	6.00	0.2362	28	66	36	6	R4586.0	R4576.0
B	6.03	0.2374	34	79	36	8	R458B	R457B
	6.05	0.2382	34	79	36	8		R4576.05
	6.10	0.2402	34	79	36	8	R4586.1	R4576.1
C	6.15	0.2421	34	79	36	8	R458C	R457C
	6.20	0.2441	34	79	36	8	R4586.2	R4576.2
D	6.25	0.2461	34	79	36	8	R458D	R457D
	6.30	0.2480	34	79	36	8	R4586.3	R4576.3
1/4	6.35	0.2500	34	79	36	8	R4581/4	R4571/4
E	6.35	0.2500	34	79	36	8	R458E	R457E
	6.40	0.2520	34	79	36	8	R4586.4	R4576.4
	6.50	0.2559	34	79	36	8	R4586.5	R4576.5
F	6.53	0.2571	34	79	36	8	R458F	R457F
	6.60	0.2598	34	79	36	8	R4586.6	R4576.6
G	6.63	0.2610	34	79	36	8	R458G	R457G
	6.70	0.2638	34	79	36	8	R4586.7	R4576.7
17/64	6.75	0.2657	34	79	36	8	R45817/64	R45717/64
H	6.76	0.2661	34	79	36	8	R458H	R457H
	6.80	0.2677	34	79	36	8	R4586.8	R4576.8
	6.90	0.2717	34	79	36	8	R4586.9	R4576.9
I	6.91	0.2720	34	79	36	8	R458I	R457I
	7.00	0.2756	34	79	36	8	R4587.0	R4577.0

DORMER

d_1 Ø "/Nr.	d_1 Øm_7 mm	d_1 decimal Inch	l_2 mm	l_1 mm	l_3 mm	d_2 Øh_6 mm	R458	R457
J	7.04	0.2772	41	79	36	8	R458J	R457J
	7.10	0.2795	41	79	36	8	R4587.1	R4577.1
K	7.14	0.2811	41	79	36	8	R458K	R457K
9/32	7.14	0.2811	41	79	36	8	R4589/32	R4579/32
	7.20	0.2835	41	79	36	8	R4587.2	R4577.2
	7.30	0.2874	41	79	36	8	R4587.3	R4577.3
L	7.37	0.2902	41	79	36	8	R458L	R457L
	7.40	0.2913	41	79	36	8	R4587.4	R4577.4
M	7.49	0.2949	41	79	36	8	R458M	R457M
	7.50	0.2953	41	79	36	8	R4587.5	R4577.5
19/64	7.54	0.2969	41	79	36	8	R45819/64	R45719/64
	7.60	0.2992	41	79	36	8	R4587.6	R4577.6
N	7.67	0.3020	41	79	36	8	R458N	R457N
	7.70	0.3031	41	79	36	8	R4587.7	R4577.7
	7.80	0.3071	41	79	36	8	R4587.8	R4577.8
	7.90	0.3110	41	79	36	8	R4587.9	R4577.9
5/16	7.94	0.3126	41	79	36	8	R4585/16	R4575/16
	8.00	0.3150	41	79	36	8	R4588.0	R4578.0
O	8.03	0.3161	47	89	40	10	R458O	R457O
	8.05	0.3169	47	89	40	10		R4578.05
	8.10	0.3189	47	89	40	10	R4588.1	R4578.1
	8.20	0.3228	47	89	40	10	R4588.2	R4578.2
P	8.20	0.3228	47	89	40	10	R458P	R457P
	8.30	0.3268	47	89	40	10	R4588.3	R4578.3
21/64	8.33	0.3280	47	89	40	10	R45821/64	R45721/64
	8.40	0.3307	47	89	40	10	R4588.4	R4578.4
Q	8.43	0.3319	47	89	40	10	R458Q	R457Q
	8.50	0.3346	47	89	40	10	R4588.5	R4578.5
	8.60	0.3386	47	89	40	10	R4588.6	R4578.6
R	8.61	0.3390	47	89	40	10	R458R	R457R
	8.70	0.3425	47	89	40	10	R4588.7	R4578.7
11/32	8.73	0.3437	47	89	40	10	R45811/32	R45711/32
	8.80	0.3465	47	89	40	10	R4588.8	R4578.8
S	8.84	0.3480	47	89	40	10	R458S	R457S
	8.90	0.3504	47	89	40	10	R4588.9	R4578.9
	9.00	0.3543	47	89	40	10	R4589.0	R4579.0
T	9.09	0.3579	47	89	40	10	R458T	R457T
	9.10	0.3583	47	89	40	10	R4589.1	R4579.1
23/64	9.13	0.3594	47	89	40	10	R45823/64	R45723/64
	9.20	0.3622	47	89	40	10	R4589.2	R4579.2
	9.30	0.3661	47	89	40	10	R4589.3	R4579.3
U	9.35	0.3681	47	89	40	10	R458U	R457U
	9.40	0.3701	47	89	40	10	R4589.4	R4579.4
	9.50	0.3740	47	89	40	10	R4589.5	R4579.5
3/8	9.52	0.3748	47	89	40	10	R4583/8	R4573/8
V	9.58	0.3772	47	89	40	10	R458V	R457V
	9.60	0.3780	47	89	40	10	R4589.6	R4579.6
	9.70	0.3819	47	89	40	10	R4589.7	R4579.7
	9.80	0.3858	47	89	40	10	R4589.8	R4579.8
W	9.80	0.3858	47	89	40	10	R458W	R457W
	9.90	0.3898	47	89	40	10	R4589.9	R4579.9
25/64	9.92	0.3906	47	89	40	10	R45825/64	R45725/64
	10.00	0.3937	47	89	40	10	R45810.0	R45710.0
	10.05	0.3957	55	102	45	12		R45710.05
X	10.08	0.3969	55	102	45	12	R458X	R457X
	10.10	0.3976	55	102	45	12	R45810.1	R45710.1
	10.20	0.4016	55	102	45	12	R45810.2	R45710.2
Y	10.26	0.4039	55	102	45	12	R458Y	R457Y
	10.30	0.4055	55	102	45	12	R45810.3	R45710.3
13/32	10.32	0.4063	55	102	45	12	R45813/32	R45713/32
	10.40	0.4094	55	102	45	12	R45810.4	R45710.4
Z	10.49	0.4130	55	102	45	12	R458Z	R457Z
	10.50	0.4134	55	102	45	12	R45810.5	R45710.5
	10.60	0.4173	55	102	45	12	R45810.6	R45710.6
	10.70	0.4213	55	102	45	12	R45810.7	
27/64	10.72	0.4220	55	102	45	12	R45827/64	R45727/64
	10.80	0.4252	55	102	45	12	R45810.8	R45710.8
	10.90	0.4291	55	102	45	12	R45810.9	
	11.00	0.4331	55	102	45	12	R45811.0	R45711.0
	11.10	0.4370	55	102	45	12	R45811.1	

d_1 Ø "/Nr.	d_1 Øm_7 mm	d_1 decimal Inch	l_2 mm	l_1 mm	l_3 mm	d_2 Øh_6 mm	R458	R457
7/16	11.11	0.4374	55	102	45	12	R4587/16	R4577/16
	11.20	0.4409	55	102	45	12	R45811.2	R45711.2
	11.30	0.4449	55	102	45	12	R45811.3	R45711.3
	11.40	0.4488	55	102	45	12	R45811.4	R45711.4
	11.50	0.4528	55	102	45	12	R45811.5	R45711.5
29/64	11.51	0.4531	55	102	45	12	R45829/64	R45729/64
	11.60	0.4567	55	102	45	12	R45811.6	R45711.6
	11.70	0.4606	55	102	45	12	R45811.7	
	11.80	0.4646	55	102	45	12	R45811.8	R45711.8
	11.90	0.4685	55	102	45	12	R45811.9	
15/32	11.91	0.4689	55	102	45	12	R45815/32	R45715/32
	12.00	0.4724	55	102	45	12	R45812.0	R45712.0
	12.05	0.4744	60	107	45	14		R45712.05
	12.10	0.4764	60	107	45	14	R45812.1	R45712.1
	12.20	0.4803	60	107	45	14	R45812.2	R45712.2
31/64	12.30	0.4843	60	107	45	14	R45831/64	R45731/64
	12.50	0.4921	60	107	45	14	R45812.5	R45712.5
	12.70	0.5000	60	107	45	14	R45812.7	R45712.7
1/2	12.70	0.5000	60	107	45	14	R4581/2	R4571/2
	12.80	0.5039	60	107	45	14	R45812.8	R45712.8
	13.00	0.5118	60	107	45	14	R45813.0	R45713.0
33/64	13.10	0.5157	60	107	45	14	R45833/64	R45733/64
	13.30	0.5236	60	107	45	14	R45813.3	R45713.3
17/32	13.49	0.5311	60	107	45	14	R45817/32	R45717/32
	13.50	0.5315	60	107	45	14	R45813.5	R45713.5
	13.80	0.5433	60	107	45	14	R45813.8	R45713.8
35/64	13.89	0.5469	60	107	45	14	R45835/64	R45735/64
	14.00	0.5512	60	107	45	14	R45814.0	R45714.0
	14.25	0.5610	65	115	48	16	R45814.25	R45714.25
9/16	14.29	0.5626	65	115	48	16	R4589/16	R4579/16
	14.50	0.5709	65	115	48	16	R45814.5	R45714.5
37/64	14.68	0.5780	65	115	48	16	R45837/64	R45737/64
	14.80	0.5827	65	115	48	16	R45814.8	R45714.8
	15.00	0.5906	65	115	48	16	R45815.0	R45715.0
19/32	15.08	0.5937	65	115	48	16	R45819/32	R45719/32
	15.10	0.5945	65	115	48	16	R45815.1	R45715.1
	15.30	0.6024	65	115	48	16	R45815.3	R45715.3
39/64	15.48	0.6094	65	115	48	16	R45839/64	R45739/64
	15.50	0.6102	65	115	48	16	R45815.5	R45715.5
	15.80	0.6220	65	115	48	16	R45815.8	R45715.8
5/8	15.88	0.6252	65	115	48	16	R4585/8	R4575/8
	16.00	0.6299	65	115	48	16	R45816.0	R45716.0
41/64	16.27	0.6406	73	123	48	18	R45841/64	R45741/64
	16.50	0.6496	73	123	48	18	R45816.5	R45716.5
21/32	16.67	0.6563	73	123	48	18	R45821/32	R45721/32
	17.00	0.6693	73	123	48	18	R45817.0	R45717.0
43/64	17.07	0.6720	73	123	48	18	R45843/64	R45743/64
11/16	17.46	0.6874	73	123	48	18	R45811/16	R45711/16
	17.50	0.6890	73	123	48	18	R45817.5	R45717.5
	17.80	0.7008	73	123	48	18	R45817.8	
45/64	17.86	0.7031	73	123	48	18	R45845/64	R45745/64
	18.00	0.7087	73	123	48	18	R45818.0	R45718.0
23/32	18.26	0.7189	79	131	50	20	R45823/32	R45723/32
	18.50	0.7283	79	131	50	20	R45818.5	R45718.5
47/64	18.65	0.7343	79	131	50	20	R45847/64	R45747/64
	18.80	0.7402	79	131	50	20		R45718.8
	19.00	0.7480	79	131	50	20	R45819.0	R45719.0
3/4	19.05	0.7500	79	131	50	20	R4583/4	R4573/4
	19.50	0.7677	79	131	50	20	R45819.5	R45719.5
	19.80	0.7795	79	131	50	20	R45819.8	R45719.8
	20.00	0.7874	79	131	50	20	R45820.0	R45720.0

DORMER

R454

- Force-X 无内冷钻头 5XD
- Broca Force-X Serie Longa 5XD
- Broca larga - Force-X 5XD
- Force X Drill 5XD

R453

- Force-X 内冷钻头 5XD
- Broca Force-X com refrigeração interna 5XD
- Broca - Force-X - Refrigeración interna 5XD
- Force X Drill Oil Feed 5XD

R454	▪	1.1 1.2 1.3 1.4 1.5 1.6 1.7 1.8 2.1 2.2 2.3 3.1 3.2 3.3 3.4 6.1 6.2 6.3 7.1 7.2 7.3 7.4
	•	2.4 4.1 4.2 4.3 6.4
R453	▪	1.1 1.2 1.3 1.4 1.5 1.6 1.7 1.8 2.1 2.2 3.1 3.2 3.3 3.4 4.1 4.2 4.3 6.1 6.2 6.3 6.4 7.1 7.2 7.3 7.4
	•	2.3 2.4

R454	HM	DIN 6537 L	5XD	140°	TiAlN	DIN 6535HA	CTW			
R453	HM	DIN 6537 L	5XD	140°	TiAlN	DIN 6535HA	CTW			

d_1 Ø Inch	d_1 Øm_7 mm	d_1 decimal Inch	l_2 mm	l_1 mm	l_3 mm	d_2 Øh_6 mm	R454	R453
	3.00	0.1181	28	66	36	6	R4543.0	R4533.0
	3.10	0.1220	28	66	36	6	R4543.1	R4533.1
1/8	3.18	0.1252	28	66	36	6	R4541/8	R4531/8
	3.20	0.1260	28	66	36	6	R4543.2	R4533.2
30	3.26	0.1283	28	66	36	6	R454N30	R453N30
	3.30	0.1299	28	66	36	6	R4543.3	R4533.3
	3.40	0.1339	28	66	36	6	R4543.4	R4533.4
29	3.45	0.1358	28	66	36	6	R454N29	R453N29
	3.50	0.1378	28	66	36	6	R4543.5	R4533.5
28	3.57	0.1406	28	66	36	6	R454N28	R453N28
9/64	3.57	0.1406	28	66	36	6	R4549/64	R4539/64
	3.60	0.1417	28	66	36	6	R4543.6	R4533.6
27	3.66	0.1441	28	66	36	6	R454N27	R453N27
	3.70	0.1457	28	66	36	6	R4543.7	R4533.7
26	3.73	0.1469	36	74	36	6	R454N26	R453N26
	3.80	0.1496	36	74	36	6	R4543.8	R4533.8
25	3.80	0.1496	36	74	36	6	R454N25	R453N25
24	3.86	0.1520	36	74	36	6	R454N24	R453N24
	3.90	0.1535	36	74	36	6	R4543.9	R4533.9
23	3.91	0.1539	36	74	36	6	R454N23	R453N23
5/32	3.97	0.1563	36	74	36	6	R4545/32	R4535/32
22	3.99	0.1571	36	74	36	6	R454N22	R453N22

d_1 Ø Inch	d_1 Øm_7 mm	d_1 decimal Inch	l_2 mm	l_1 mm	l_3 mm	d_2 Øh_6 mm	R454	R453
	4.00	0.1575	36	74	36	6	R4544.0	R4534.0
21	4.04	0.1591	36	74	36	6	R454N21	R453N21
	4.05	0.1594	36	74	36	6		R4534.05
20	4.09	0.1610	36	74	36	6	R454N20	R453N20
	4.10	0.1614	36	74	36	6	R4544.1	R4534.1
	4.20	0.1654	36	74	36	6	R4544.2	R4534.2
19	4.22	0.1661	36	74	36	6	R454N19	R453N19
	4.30	0.1693	36	74	36	6	R4544.3	R4534.3
18	4.31	0.1697	36	74	36	6	R454N18	R453N18
11/64	4.37	0.1720	36	74	36	6	R45411/64	R45311/64
17	4.39	0.1728	36	74	36	6	R454N17	R453N17
	4.40	0.1732	36	74	36	6	R4544.4	R4534.4
	4.50	0.1772	36	74	36	6	R4544.5	R4534.5
16	4.50	0.1772	36	74	36	6	R454N16	R453N16
15	4.57	0.1799	36	74	36	6	R454N15	R453N15
	4.60	0.1811	36	74	36	6	R4544.6	R4534.6
14	4.62	0.1819	36	74	36	6	R454N14	R453N14
	4.70	0.1850	36	74	36	6	R4544.7	R4534.7
13	4.70	0.1850	36	74	36	6	R454N13	R453N13
3/16	4.76	0.1874	44	82	36	6	R4543/16	R4533/16
	4.80	0.1890	44	82	36	6	R4544.8	R4534.8
12	4.80	0.1890	44	82	36	6	R454N12	R453N12
11	4.85	0.1909	44	82	36	6	R454N11	R453N11
	4.90	0.1929	44	82	36	6	R4544.9	R4534.9
10	4.92	0.1937	44	82	36	6	R454N10	R453N10
9	4.98	0.1961	44	82	36	6	R454N9	R453N9
	5.00	0.1969	44	82	36	6	R4545.0	R4535.0
	5.05	0.1988	44	82	36	6		R4535.05
8	5.06	0.1992	44	82	36	6	R454N8	R453N8
	5.10	0.2008	44	82	36	6	R4545.1	R4535.1
7	5.11	0.2012	44	82	36	6	R454N7	R453N7
13/64	5.16	0.2031	44	82	36	6	R45413/64	R45313/64
6	5.18	0.2039	44	82	36	6	R454N6	R453N6
	5.20	0.2047	44	82	36	6	R4545.2	R4535.2
5	5.22	0.2055	44	82	36	6	R454N5	R453N5
	5.30	0.2087	44	82	36	6		R4535.3
4	5.31	0.2091	44	82	36	6	R454N4	R453N4
	5.40	0.2126	44	82	36	6		R4535.4
3	5.41	0.2130	44	82	36	6	R454N3	R453N3
	5.50	0.2165	44	82	36	6	R4545.5	R4535.5
7/32	5.56	0.2189	44	82	36	6	R4547/32	R4537/32
	5.60	0.2205	44	82	36	6	R4545.6	R4535.6
2	5.61	0.2209	44	82	36	6	R454N2	R453N2
	5.70	0.2244	44	82	36	6	R4545.7	R4535.7
1	5.79	0.2280	44	82	36	6	R454N1	R453N1
	5.80	0.2283	44	82	36	6	R4545.8	R4535.8
	5.90	0.2323	44	82	36	6		R4535.9
A	5.94	0.2339	44	82	36	6	R454A	R453A
15/64	5.95	0.2343	44	82	36	6	R45415/64	R45315/64
	6.00	0.2362	44	82	36	6	R4546.0	R4536.0
B	6.03	0.2374	53	91	36	8	R454B	R453B
	6.05	0.2382	53	91	36	8		R4536.05
	6.10	0.2402	53	91	36	8	R4546.1	R4536.1
C	6.15	0.2421	53	91	36	8	R454C	R453C
	6.20	0.2441	53	91	36	8	R4546.2	R4536.2
D	6.25	0.2461	53	91	36	8	R454D	R453D
	6.30	0.2480	53	91	36	8	R4546.3	R4536.3
1/4	6.35	0.2500	53	91	36	8	R4541/4	R4531/4
E	6.35	0.2500	53	91	36	8	R454E	R453E
	6.40	0.2520	53	91	36	8	R4546.4	R4536.4
	6.50	0.2559	53	91	36	8	R4546.5	R4536.5
F	6.53	0.2571	53	91	36	8	R454F	R453F
	6.60	0.2598	53	91	36	8	R4546.6	R4536.6
G	6.63	0.2610	53	91	36	8	R454G	R453G
	6.70	0.2638	53	91	36	8	R4546.7	R4536.7
17/64	6.75	0.2657	53	91	36	8	R45417/64	R45317/64
H	6.76	0.2661	53	91	36	8	R454H	R453H
	6.80	0.2677	53	91	36	8	R4546.8	R4536.8
	6.90	0.2717	53	91	36	8	R4546.9	R4536.9

DORMER

d_1 Ø Inch	d_1 Øm_7 mm	d_1 decimal Inch	l_2 mm	l_1 mm	l_3 mm	d_2 Øh_6 mm	R454	R453
I	6.91	0.2720	53	91	36	8	R454I	R453I
	7.00	0.2756	53	91	36	8	R4547.0	R4537.0
J	7.04	0.2772	53	91	36	8	R454J	R453J
	7.10	0.2795	53	91	36	8	R4547.1	R4537.1
K	7.14	0.2811	53	91	36	8	R454K	R453K
9/32	7.14	0.2811	53	91	36	8	R4549/32	R4539/32
	7.20	0.2835	53	91	36	8		R4537.2
	7.30	0.2874	53	91	36	8	R4547.3	R4537.3
L	7.37	0.2902	53	91	36	8	R454L	R453L
	7.40	0.2913	53	91	36	8	R4547.4	R4537.4
M	7.49	0.2949	53	91	36	8	R454M	R453M
	7.50	0.2953	53	91	36	8	R4547.5	R4537.5
19/64	7.54	0.2969	53	91	36	8	R45419/64	R45319/64
	7.60	0.2992	53	91	36	8	R4547.6	R4537.6
N	7.67	0.3020	53	91	36	8	R454N	R453N
	7.70	0.3031	53	91	36	8	R4547.7	R4537.7
	7.80	0.3071	53	91	36	8	R4547.8	R4537.8
	7.90	0.3110	53	91	36	8	R4547.9	R4537.9
5/16	7.94	0.3126	53	91	36	8	R4545/16	R4535/16
	8.00	0.3150	53	91	36	8	R4548.0	R4538.0
O	8.03	0.3161	61	103	40	10	R454O	R453O
	8.05	0.3169	61	103	40	10		R4538.05
	8.10	0.3189	61	103	40	10	R4548.1	R4538.1
	8.20	0.3228	61	103	40	10	R4548.2	R4538.2
P	8.20	0.3228	61	103	40	10	R454P	R453P
	8.30	0.3268	61	103	40	10		R4538.3
21/64	8.33	0.3280	61	103	40	10	R45421/64	R45321/64
	8.40	0.3307	61	103	40	10	R4548.4	R4538.4
Q	8.43	0.3319	61	103	40	10	R454Q	R453Q
	8.50	0.3346	61	103	40	10	R4548.5	R4538.5
	8.60	0.3386	61	103	40	10	R4548.6	R4538.6
R	8.61	0.3390	61	103	40	10	R454R	R453R
	8.70	0.3425	61	103	40	10	R4548.7	R4538.7
11/32	8.73	0.3437	61	103	40	10	R45411/32	R45311/32
	8.80	0.3465	61	103	40	10	R4548.8	R4538.8
S	8.84	0.3480	61	103	40	10	R454S	R453S
	8.90	0.3504	61	103	40	10	R4548.9	R4538.9
	9.00	0.3543	61	103	40	10	R4549.0	R4539.0
T	9.09	0.3579	61	103	40	10	R454T	R453T
	9.10	0.3583	61	103	40	10	R4549.1	R4539.1
23/64	9.13	0.3594	61	103	40	10	R45423/64	R45323/64
	9.20	0.3622	61	103	40	10		R4539.2
	9.30	0.3661	61	103	40	10	R4549.3	R4539.3
U	9.35	0.3681	61	103	40	10	R454U	R453U
	9.40	0.3701	61	103	40	10	R4549.4	R4539.4
	9.50	0.3740	61	103	40	10	R4549.5	R4539.5
3/8	9.52	0.3748	61	103	40	10	R4543/8	R4533/8
V	9.58	0.3772	61	103	40	10	R454V	R453V
	9.60	0.3780	61	103	40	10	R4549.6	R4539.6
	9.70	0.3819	61	103	40	10	R4549.7	R4539.7
	9.80	0.3858	61	103	40	10	R4549.8	R4539.8
W	9.80	0.3858	61	103	40	10	R454W	R453W
	9.90	0.3898	61	103	40	10	R4549.9	R4539.9
25/64	9.92	0.3906	61	103	40	10	R45425/64	R45325/64
	10.00	0.3937	61	103	40	10	R45410.0	R45310.0
	10.05	0.3957	70	118	45	12		R45310.05
X	10.08	0.3969	70	118	45	12	R454X	R453X
	10.10	0.3976	70	118	45	12	R45410.1	R45310.1
	10.20	0.4016	70	118	45	12	R45410.2	R45310.2
Y	10.26	0.4039	70	118	45	12	R454Y	R453Y
	10.30	0.4055	70	118	45	12	R45410.3	R45310.3
13/32	10.32	0.4063	70	118	45	12	R45413/32	R45313/32
	10.40	0.4094	70	118	45	12	R45410.4	R45310.4
Z	10.49	0.4130	70	118	45	12	R454Z	R453Z
	10.50	0.4134	70	118	45	12	R45410.5	R45310.5
	10.60	0.4173	70	118	45	12	R45410.6	R45310.6
27/64	10.72	0.4220	70	118	45	12	R45427/64	R45327/64
	10.80	0.4252	70	118	45	12		R45310.8
	11.00	0.4331	70	118	45	12	R45411.0	R45311.0
7/16	11.11	0.4374	70	118	45	12	R4547/16	R4537/16

d_1 Ø Inch	d_1 Øm_7 mm	d_1 decimal Inch	l_2 mm	l_1 mm	l_3 mm	d_2 Øh_6 mm	R454	R453
	11.20	0.4409	70	118	45	12	R45411.2	R45311.2
	11.30	0.4449	70	118	45	12		R45311.3
	11.40	0.4488	70	118	45	12	R45411.4	R45311.4
	11.50	0.4528	70	118	45	12	R45411.5	R45311.5
29/64	11.51	0.4531	70	118	45	12	R45429/64	R45329/64
	11.60	0.4567	70	118	45	12	R45411.6	R45311.6
	11.80	0.4646	70	118	45	12	R45411.8	R45311.8
15/32	11.91	0.4689	70	118	45	12	R45415/32	R45315/32
	12.00	0.4724	70	118	45	12	R45412.0	R45312.0
	12.05	0.4744	76	124	45	14		R45312.05
	12.10	0.4764	76	124	45	14	R45412.1	
	12.20	0.4803	76	124	45	14	R45412.2	R45312.2
31/64	12.30	0.4843	76	124	45	14	R45431/64	R45331/64
	12.50	0.4921	76	124	45	14	R45412.5	R45312.5
	12.70	0.5000	76	124	45	14	R45412.7	R45312.7
1/2	12.70	0.5000	76	124	45	14	R4541/2	R4531/2
	12.80	0.5039	76	124	45	14	R45412.8	R45312.8
	13.00	0.5118	76	124	45	14	R45413.0	R45313.0
33/64	13.10	0.5157	76	124	45	14	R45433/64	R45333/64
	13.30	0.5236	76	124	45	14		R45313.3
17/32	13.49	0.5311	76	124	45	14	R45417/32	R45317/32
	13.50	0.5315	76	124	45	14	R45413.5	R45313.5
	13.80	0.5433	76	124	45	14	R45413.8	R45313.8
35/64	13.89	0.5469	76	124	45	14	R45435/64	R45335/64
	14.00	0.5512	76	124	45	14	R45414.0	R45314.0
	14.25	0.5610	82	133	48	16	R45414.25	R45314.25
9/16	14.29	0.5626	82	133	48	16	R4549/16	R4539/16
	14.50	0.5709	82	133	48	16	R45414.5	R45314.5
37/64	14.68	0.5780	82	133	48	16	R45437/64	R45337/64
	14.80	0.5827	82	133	48	16	R45414.8	R45314.8
	15.00	0.5906	82	133	48	16	R45415.0	R45315.0
19/32	15.08	0.5937	82	133	48	16	R45419/32	R45319/32
	15.10	0.5945	82	133	48	16	R45415.1	R45315.1
	15.30	0.6024	82	133	48	16		R45315.3
39/64	15.48	0.6094	82	133	48	16	R45439/64	R45339/64
	15.50	0.6102	82	133	48	16	R45415.5	R45315.5
	15.80	0.6220	82	133	48	16	R45415.8	R45315.8
5/8	15.88	0.6252	82	133	48	16	R4545/8	R4535/8
	16.00	0.6299	82	133	48	16	R45416.0	R45316.0
41/64	16.27	0.6406	91	143	48	18	R45441/64	R45341/64
	16.50	0.6496	91	143	48	18	R45416.5	R45316.5
21/32	16.67	0.6563	91	143	48	18	R45421/32	R45321/32
	17.00	0.6693	91	143	48	18	R45417.0	R45317.0
43/64	17.07	0.6720	91	143	48	18	R45443/64	R45343/64
11/16	17.46	0.6874	91	143	48	18	R45411/16	R45311/16
	17.50	0.6890	91	143	48	18	R45417.5	R45317.5
	17.80	0.7008	91	143	48	18	R45417.8	R45317.8
45/64	17.86	0.7031	91	143	48	18	R45445/64	R45345/64
	18.00	0.7087	91	143	48	18	R45418.0	R45318.0
23/32	18.26	0.7189	99	153	50	20	R45423/32	R45323/32
	18.50	0.7283	99	153	50	20	R45418.5	R45318.5
47/64	18.65	0.7343	99	153	50	20	R45447/64	R45347/64
	19.00	0.7480	99	153	50	20	R45419.0	R45319.0
3/4	19.05	0.7500	99	153	50	20	R4543/4	R4533/4
	19.50	0.7677	99	153	50	20	R45419.5	R45319.5
	19.80	0.7795	99	153	50	20	R45419.8	R45319.8
	20.00	0.7874	99	153	50	20	R45420.0	R45320.0

DORMER

R459

- Force-X 内冷钻头 8XD
- Broca Force-X com refrigeração interna 8XD
- Broca - Force-X - Refrigeración interna 8XD
- Force X Drill Oil Feed 8XD

R459		
	▪	1.1 1.2 1.3 1.4 1.5 1.6 2.1 2.2 3.1 3.2 3.3 3.4 7.2 7.3
	•	2.3 6.1 6.2 6.3 6.4 7.1

R459 HM DORMER 8XD 140° TiAlN DIN 6535HA CTW

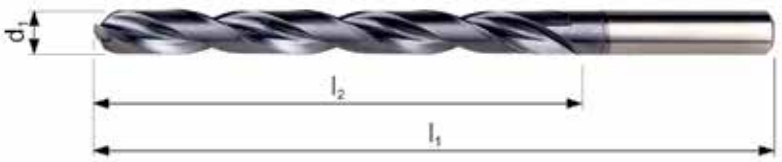

R459

FORCE X

3.00 - 16.00

d_1 Øm_7 Inch	d_1 Øm_7 mm	d_1 decimal Inch	l_2 mm	l_1 mm	l_3 mm	d_2 Øh_6 mm	R459
	3.00	0.1181	37	79	36	6	R4593.0
	3.10	0.1220	37	79	36	6	R4593.1
1/8	3.18	0.1252	37	79	36	6	R4591/8
	3.20	0.1260	37	79	36	6	R4593.2
	3.30	0.1299	37	79	36	6	R4593.3
	3.40	0.1339	37	79	36	6	R4593.4
	3.50	0.1378	37	79	36	6	R4593.5
9/64	3.57	0.1406	37	79	36	6	R4599/64
	3.60	0.1417	37	79	36	6	R4593.6
	3.70	0.1457	37	79	36	6	R4593.7
	3.80	0.1496	48	90	36	6	R4593.8
	3.90	0.1535	48	90	36	6	R4593.9
5/32	3.97	0.1563	48	90	36	6	R4595/32
	4.00	0.1575	48	90	36	6	R4594.0
	4.10	0.1614	48	90	36	6	R4594.1
	4.20	0.1654	48	90	36	6	R4594.2
	4.30	0.1693	48	90	36	6	R4594.3
11/64	4.37	0.1720	48	90	36	6	R45911/64
	4.40	0.1732	48	90	36	6	R4594.4
	4.50	0.1772	48	90	36	6	R4594.5
	4.60	0.1811	48	90	36	6	R4594.6
	4.70	0.1850	62	104	36	6	R4594.7
3/16	4.76	0.1874	62	104	36	6	R4593/16
	4.80	0.1890	62	104	36	6	R4594.8
	4.90	0.1929	62	104	36	6	R4594.9
	5.00	0.1969	62	104	36	6	R4595.0
	5.10	0.2008	62	104	36	6	R4595.1
13/64	5.16	0.2031	62	104	36	6	R45913/64
	5.20	0.2047	62	104	36	6	R4595.2
	5.30	0.2087	62	104	36	6	R4595.3
	5.40	0.2126	62	104	36	6	R4595.4
	5.50	0.2165	62	104	36	6	R4595.5
7/32	5.56	0.2189	62	104	36	6	R4597/32
	5.60	0.2205	62	104	36	6	R4595.6
	5.70	0.2244	62	104	36	6	R4595.7
	5.80	0.2283	62	104	36	6	R4595.8

d_1 Øm_7 Inch	d_1 Øm_7 mm	d_1 decimal Inch	l_2 mm	l_1 mm	l_3 mm	d_2 Øh_6 mm	R459
	5.90	0.2323	62	104	36	6	R4595.9
15/64	5.95	0.2343	62	104	36	6	R45915/64
	6.00	0.2362	62	104	36	6	R4596.0
	6.10	0.2402	84	126	36	8	R4596.1
	6.20	0.2441	84	126	36	8	R4596.2
	6.30	0.2480	84	126	36	8	R4596.3
1/4	6.35	0.2500	84	126	36	8	R4591/4
	6.40	0.2520	84	126	36	8	R4596.4
	6.50	0.2559	84	126	36	8	R4596.5
	6.60	0.2598	84	126	36	8	R4596.6
	6.70	0.2638	84	126	36	8	R4596.7
17/64	6.75	0.2657	84	126	36	8	R45917/64
	6.80	0.2677	84	126	36	8	R4596.8
	6.90	0.2717	84	126	36	8	R4596.9
	7.00	0.2756	84	126	36	8	R4597.0
	7.10	0.2795	84	126	36	8	R4597.1
9/32	7.14	0.2811	84	126	36	8	R4599/32
	7.20	0.2835	84	126	36	8	R4597.2
	7.30	0.2874	84	126	36	8	R4597.3
	7.40	0.2913	84	126	36	8	R4597.4
	7.50	0.2953	84	126	36	8	R4597.5
19/64	7.54	0.2969	84	126	36	8	R45919/64
	7.60	0.2992	84	126	36	8	R4597.6
	7.70	0.3031	84	126	36	8	R4597.7
	7.80	0.3071	84	126	36	8	R4597.8
	7.90	0.3110	84	126	36	8	R4597.9
5/16	7.94	0.3126	84	126	36	8	R4595/16
	8.00	0.3150	84	126	36	8	R4598.0
	8.10	0.3189	106	152	40	10	R4598.1
	8.20	0.3228	106	152	40	10	R4598.2
	8.30	0.3268	106	152	40	10	R4598.3
21/64	8.33	0.3280	106	152	40	10	R45921/64
	8.40	0.3307	106	152	40	10	R4598.4
	8.50	0.3346	106	152	40	10	R4598.5
	8.60	0.3386	106	152	40	10	R4598.6
	8.70	0.3425	106	152	40	10	R4598.7
11/32	8.73	0.3437	106	152	40	10	R45911/32
	8.80	0.3465	106	152	40	10	R4598.8
	8.90	0.3504	106	152	40	10	R4598.9
	9.00	0.3543	106	152	40	10	R4599.0
	9.10	0.3583	106	152	40	10	R4599.1
23/64	9.13	0.3594	106	152	40	10	R45923/64
	9.20	0.3622	106	152	40	10	R4599.2
	9.30	0.3661	106	152	40	10	R4599.3
	9.40	0.3701	106	152	40	10	R4599.4
	9.50	0.3740	106	152	40	10	R4599.5
3/8	9.53	0.3748	106	152	40	10	R4593/8
	9.60	0.3780	106	152	40	10	R4599.6
	9.70	0.3819	106	152	40	10	R4599.7
	9.80	0.3858	106	152	40	10	R4599.8
	9.90	0.3898	106	152	40	10	R4599.9
25/64	9.92	0.3906	106	152	40	10	R45925/64
	10.00	0.3937	106	152	40	10	R45910.0
	10.20	0.4016	128	180	45	12	R45910.2
	10.30	0.4055	128	180	45	12	R45910.3
13/32	10.32	0.4063	128	180	45	12	R45913/32
	10.40	0.4094	128	180	45	12	R45910.4
	10.50	0.4134	128	180	45	12	R45910.5
27/64	10.72	0.4220	128	180	45	12	R45927/64
	10.80	0.4252	128	180	45	12	R45910.8
	11.00	0.4331	128	180	45	12	R45911.0
7/16	11.11	0.4374	128	180	45	12	R4597/16
	11.20	0.4409	128	180	45	12	R45911.2
	11.30	0.4449	128	180	45	12	R45911.3
	11.50	0.4528	128	180	45	12	R45911.5
29/64	11.51	0.4531	128	180	45	12	R45929/64
	11.80	0.4646	128	180	45	12	R45911.8
15/32	11.91	0.4689	128	180	45	12	R45915/32
	12.00	0.4724	128	180	45	12	R45912.0
	12.20	0.4803	151	202	48	14	R45912.2

d_1 Øm_7 Inch	d_1 Øm_7 mm	d_1 decimal Inch	l_2 mm	l_1 mm	l_3 mm	d_2 Øh_6 mm	R459
31/64	12.30	0.4843	151	202	48	14	R45931/64
	12.50	0.4921	151	202	48	14	R45912.5
1/2	12.70	0.5000	151	202	48	14	R4591/2
	12.80	0.5039	151	202	48	14	R45912.8
	13.00	0.5118	151	202	48	14	R45913.0
33/64	13.10	0.5157	151	202	48	14	R45933/64
17/32	13.49	0.5311	151	202	48	14	R45917/32
	13.50	0.5315	151	202	48	14	R45913.5
35/64	13.89	0.5469	151	202	48	14	R45935/64
	14.00	0.5512	151	202	48	14	R45914.0
	14.25	0.5610	172	227	48	16	R45914.25
9/16	14.29	0.5626	172	227	48	16	R4599/16
	14.50	0.5709	172	227	48	16	R45914.5
37/64	14.68	0.5780	172	227	48	16	R45937/64
	15.00	0.5906	172	227	48	16	R45915.0
19/32	15.08	0.5937	172	227	48	16	R45919/32
	15.10	0.5945	172	227	48	16	R45915.1
39/64	15.48	0.6094	172	227	48	16	R45939/64
	15.50	0.6102	172	227	48	16	R45915.5
5/8	15.88	0.6252	172	227	48	16	R4595/8
	16.00	0.6299	172	227	48	16	R45916.0

A723

- 焊点钻头
- Broca para Solda Ponto
- Broca Para Soldaduras
- Spot Weld Drill

A723			
	▪	1.1	1.2
	•	1.3	1.4

A723 HSS-E DORMER 1XD Bronze N

d_1 Øh_8 mm	d_1 decimal Inch	l_2 mm	l_1 mm	A723
6.00	0.2362	18	66	A7236.0X66
6.00	0.2362	18	93	A7236.0X93
8.00	0.3150	24	79	A7238.0X79
8.00	0.3150	24	117	A7238.0X117

A122

- 定心钻
- Broca para furo guia
- Broca para centrados
- Spotting Drill

总长符合 DIN 1897
Comprimento Total de acordo com DIN1897
Longitud total según DIN 1897
Overall Length to DIN 1897

A122																					
■	1.1	1.2	1.3	6.1	6.2	6.3	6.4	7.1	7.2												
•	1.4	1.5	1.6	2.1	2.2	2.3	3.1	3.2	3.3	3.4	4.1	4.2	4.3	5.1	5.2	5.3	7.3	7.4	8.1	8.2	
	8.3	9.1																			

A122 HSS DIN 1897 1XD 90°/ 120° N

A122

6.00 - 20.00

d_1 Øh8 mm	d_1 decimal Inch	l_2 mm	l_1 mm	A122
6.00	0.2362	30	66	A1226.0X90
6.00	0.2362	30	66	A1226.0X120
8.00	0.3150	33	79	A1228.0X90
8.00	0.3150	33	79	A1228.0X120
10.00	0.3937	35	89	A12210.0X90
10.00	0.3937	35	89	A12210.0X120
12.00	0.4724	40	102	A12212.0X90
12.00	0.4724	40	102	A12212.0X120
16.00	0.6299	40	115	A12216.0X90
16.00	0.6299	40	115	A12216.0X120
20.00	0.7874	55	131	A12220.0X90
20.00	0.7874	55	131	A12220.0X120

A119

- 双头短型钻头
- Broca Curta - Duas pontas
- Broca extra corta - Doble punta
- Stub Drill - Double Ended

薄金属板钻头
Broca para Chapas de Metal
Boca para chapas
Sheet Metal Drill

A119		
	▪	1.1 1.2
	•	1.3 1.4 1.5 1.6 2.1 2.2 2.3 4.1 4.2 4.3 5.1 5.2 5.3 6.1 6.2 6.3 6.4 7.1 7.2 7.3 7.4 8.1 8.2

A119 HSS DIN 1897 1.25XD 120° ST N

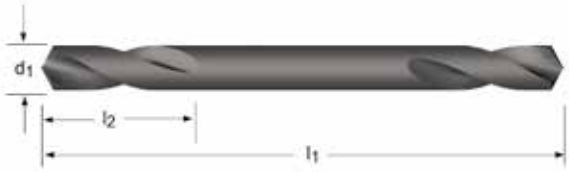

A119

3.30 - 5.10

d_1 Øh_8 mm	d_1 decimal Inch	l_2 mm	l_1 mm	A119
3.30	0.1299	11	49	A1193.3
3.60	0.1417	12	52	A1193.6
4.10	0.1614	14	55	A1194.1
4.20	0.1654	14	55	A1194.2
4.90	0.1929	17	62	A1194.9
5.10	0.2008	17	62	A1195.1

A123

- 短型钻头
- Broca Serie Extra Curta
- Broca extra corta
- Stub Drill

薄板金属钻头,全长标准按照DIN1897
Comprimento geral para DIN 1897 e furação em chapa metálica
Broca para chapas. Longitud total según DIN 1897
Sheet Metal Drill. Overall Length to DIN 1897

A123																			
■	1.1	1.2	1.3	6.1	6.2	6.3	6.4	7.1	7.2										
•	1.4	1.5	1.6	2.1	2.2	2.3	4.1	4.2	4.3	5.1	5.2	5.3	7.3	7.4	8.1	8.2	8.3	9.1	

A123 HSS DIN 1897 1.5XD 120° ST N

A123

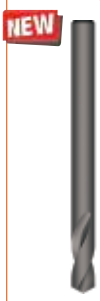

3/32 - 1/4

d_1 Øh8 Inch	d_1 Øh8 mm	d_1 decimal Inch	l_2 mm	l_1 mm	A123
3/32	2.38	0.0937	14	43	A1233/32S
	2.50	0.0984	14	43	A1232.5S
	3.00	0.1181	16	46	A1233.0S
1/8	3.18	0.1252	18	49	A1231/8S
	3.20	0.1260	18	49	A1233.2S
	3.30	0.1299	18	49	A1233.3S
	3.50	0.1378	18	52	A1233.5S
	3.70	0.1457	18	52	A1233.7S
5/32	3.97	0.1563	18	55	A1235/32S
	4.00	0.1575	18	55	A1234.0S
	4.10	0.1614	18	55	A1234.1S
	4.20	0.1654	18	55	A1234.2S
	4.50	0.1772	18	58	A1234.5S
3/16	4.76	0.1874	18	62	A1233/16S
	4.80	0.1890	18	62	A1234.8S
	4.90	0.1929	18	62	A1234.9S
	5.00	0.1969	18	62	A1235.0S
	5.50	0.2165	18	66	A1235.5S
7/32	5.56	0.2189	18	66	A1237/32S
	6.00	0.2362	18	66	A1236.0S
1/4	6.35	0.2500	19	70	A1231/4S

A120

- 短型钻头
- Broca Serie Extra Curta
- Broca extra corta
- Stub Drill

小于1.0 mm 为光亮, 不大于2.9 mm 和大于13.0 mm 为 118° 钻尖
Brilhante abaixo de 1.0mm. Ângulo da Ponta 118° até 2,9mm e acima de 13.0mm
Brillante por debajo de 1,0mm.punta 118° hasta 2,9 mm y por encima de 13,0 mm
Bright below 1.0mm. 118° point up to 2.9mm and over 13.0mm

A022

- 022 短型钻头
- 022 Broca Serie Extra Curta
- 022 Broca extra corta
- 022 Stub Drill

小于 2.0 mm 为光亮表面, 2.0 mm 及以上为端部涂 TiN 的分离式钻尖
Brilhante abaixo de 2.0mm. Ponta com TiN e afiação em Cruz a partir de 2.0mm
Brillante por debajo de 2.0mm, Punta de TiN y rectificado de la punta a partir 2.0mm
Bright below 2.0mm, TiN Tipped and Split Point 2.0mm and above

A620

- 短型钻头
- Broca Serie Extra Curta
- Broca extra corta
- Stub Drill

A117

- 短型钻头
- Broca Serie Extra Curta
- Broca extra corta
- Stub Drill

不大于 1.5 mm 为 118° 钻尖
Ponta 118° até 1,5mm
punta de 118° hasta 1,5mm
118° point up to 1.5mm

A120	▪	1.1 1.2 1.3 1.4 2.1 3.1 3.2 3.3 4.1
	•	1.5 1.6 2.2 2.3 3.4 4.2 4.3 5.1 5.2 5.3 6.1 6.2 6.3 6.4 7.1 7.2 7.3 7.4 8.1 8.2 8.3 9.1
A022	▪	1.1 1.2 1.3 1.4 1.5 2.1 3.1 3.2 3.3 4.1 7.1 7.2 7.3
	•	1.6 2.2 2.3 3.4 4.2 4.3 5.1 5.2 5.3 6.1 6.2 6.3 6.4 7.4 8.1 8.2 8.3 9.1
A620	▪	2.1 2.2 2.3
	•	1.1 1.2 1.3 1.4 1.5 1.6 3.1 3.2 3.3 3.4 4.1 4.2 4.3 5.1 5.2 5.3 6.1 6.2 6.3 6.4 7.1 7.2 7.3 7.4 8.1 8.2 8.3
A117	▪	1.5 1.6 2.1 2.2 2.3 3.4 4.1 4.2 4.3 5.1 5.2 5.3 9.1
	•	1.1 1.2 1.3 1.4 3.1 3.2 3.3 6.1 6.2 6.3 6.4 7.1 7.2 7.3 7.4 8.1 8.2 8.3

A120	HSS	DIN 1897	2.5XD	135°	ST		N			
A022	HSS	DIN ANSI	2.5XD	135°	TiN		N		A088 124	L115 335
A620	HSS-E	DIN 1897	2.5XD	130°	Bronze		N			
A117	HSS-E	DIN 1897	2.5XD	135°	Bronze		N			

DORMER

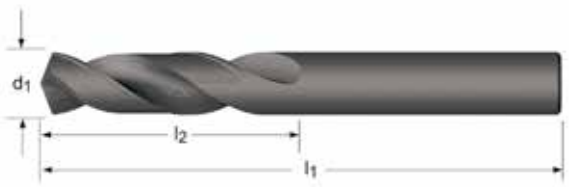

A120	A022	A620	A117
			
0.50 - 25.00	0.50 - 16.00	2.50 - 13.00	1.00 - 13.00

d_1 Øh_8 Inch	d_1 Øh_8 mm	d_1 decimal Inch	l_2 mm	l_1 mm	A120	A022	A620	A117
	0.50	0.0197	3	20	A120.5	A022.5		
	0.60	0.0236	3.5	21	A120.6	A022.6		
	0.70	0.0276	4.5	23	A120.7	A022.7		
1/32	0.79	0.0311	13	35		A0221/32		
1/32	0.79	0.0311	5	24	A1201/32			
	0.80	0.0315	5	24	A120.8	A022.8		
	0.90	0.0354	5.5	25	A120.9	A022.9		
	1.00	0.0394	6	26	A1201.0	A0221.0		A1171.0
	1.10	0.0433	7	28	A1201.1	A0221.1		A1171.1
3/64	1.19	0.0469	13	35		A0223/64		
3/64	1.19	0.0469	8	30	A1203/64			
	1.20	0.0472	8	30	A1201.2	A0221.2		A1171.2
	1.30	0.0512	8	30	A1201.3	A0221.3		A1171.3
	1.40	0.0551	9	32	A1201.4	A0221.4		A1171.4
	1.50	0.0591	9	32	A1201.5	A0221.5		A1171.5
1/16	1.59	0.0626	10	34	A1201/16			
1/16	1.59	0.0626	16	41		A0221/16		
	1.60	0.0630	10	34	A1201.6	A0221.6		A1171.6
	1.70	0.0669	10	34	A1201.7	A0221.7		A1171.7
	1.80	0.0709	11	36	A1201.8	A0221.8		A1171.8
	1.90	0.0748	11	36	A1201.9	A0221.9		A1171.9
5/64	1.98	0.0780	12	38	A1205/64			
5/64	1.98	0.0780	17	43		A0225/64		
	2.00	0.0787	12	38	A1202.0	A0222.0		A1172.0
	2.10	0.0827	12	38	A1202.1	A0222.1		A1172.1
	2.20	0.0866	13	40	A1202.2	A0222.2		A1172.2
	2.25	0.0886	13	40	A1202.25	A0222.25		
	2.30	0.0906	13	40	A1202.3	A0222.3		A1172.3
3/32	2.38	0.0937	14	43	A1203/32			
3/32	2.38	0.0937	20	45		A0223/32		
	2.40	0.0945	14	43	A1202.4	A0222.4		A1172.4
	2.50	0.0984	14	43	A1202.5	A0222.5	A6202.5	A1172.5
	2.60	0.1024	14	43	A1202.6	A0222.6	A6202.6	A1172.6
	2.65	0.1043	14	43	A1202.65	A0222.65		
	2.70	0.1063	16	46	A1202.7	A0222.7	A6202.7	A1172.7
7/64	2.78	0.1094	16	46	A1207/64			
7/64	2.78	0.1094	22	47		A0227/64		
	2.80	0.1102	16	46	A1202.8	A0222.8	A6202.8	A1172.8
	2.90	0.1142	16	46	A1202.9	A0222.9	A6202.9	A1172.9
	3.00	0.1181	16	46	A1203.0	A0223.0	A6203.0	A1173.0
	3.10	0.1220	18	49	A1203.1	A0223.1	A6203.1	A1173.1
1/8	3.18	0.1252	18	49	A1201/8			A1171/8
1/8	3.18	0.1252	23	49		A0221/8		
	3.20	0.1260	18	49	A1203.2	A0223.2	A6203.2	A1173.2
	3.25	0.1280	18	49	A1203.25	A0223.25		
	3.30	0.1299	18	49	A1203.3	A0223.3	A6203.3	A1173.3
	3.40	0.1339	20	52	A1203.4	A0223.4	A6203.4	A1173.4
	3.50	0.1378	20	52	A1203.5	A0223.5	A6203.5	A1173.5
9/64	3.57	0.1406	20	52	A1209/64			
9/64	3.57	0.1406	25	50		A0229/64		
	3.60	0.1417	20	52	A1203.6	A0223.6	A6203.6	A1173.6
	3.70	0.1457	20	52	A1203.7	A0223.7	A6203.7	A1173.7
	3.80	0.1496	22	55	A1203.8	A0223.8	A6203.8	A1173.8
	3.90	0.1535	22	55	A1203.9	A0223.9	A6203.9	A1173.9

d_1 Øh_8 Inch	d_1 Øh_8 mm	d_1 decimal Inch	l_2 mm	l_1 mm	A120	A022	A620	A117
5/32	3.97	0.1563	22	55	A1205/32			A1175/32
5/32	3.97	0.1563	26	53		A0225/32		
	4.00	0.1575	22	55	A1204.0	A0224.0	A6204.0	A1174.0
	4.10	0.1614	22	55	A1204.1	A0224.1	A6204.1	A1174.1
	4.20	0.1654	22	55	A1204.2	A0224.2	A6204.2	A1174.2
	4.30	0.1693	24	58	A1204.3	A0224.3	A6204.3	A1174.3
11/64	4.37	0.1720	24	58	A12011/64			
11/64	4.37	0.1720	28	55		A02211/64		
	4.40	0.1732	24	58	A1204.4	A0224.4	A6204.4	A1174.4
	4.50	0.1772	24	58	A1204.5	A0224.5	A6204.5	A1174.5
	4.60	0.1811	24	58	A1204.6	A0224.6	A6204.6	A1174.6
	4.70	0.1850	24	58	A1204.7	A0224.7	A6204.7	A1174.7
3/16	4.76	0.1874	26	62	A1203/16			A1173/16
3/16	4.76	0.1874	30	57		A0223/16		
	4.80	0.1890	26	62	A1204.8	A0224.8	A6204.8	A1174.8
	4.90	0.1929	26	62	A1204.9	A0224.9	A6204.9	A1174.9
	5.00	0.1969	26	62	A1205.0	A0225.0	A6205.0	A1175.0
	5.10	0.2008	26	62	A1205.1	A0225.1	A6205.1	A1175.1
13/64	5.16	0.2031	26	62	A12013/64			
13/64	5.16	0.2031	31	58		A02213/64		
	5.20	0.2047	26	62	A1205.2	A0225.2	A6205.2	A1175.2
	5.30	0.2087	26	62	A1205.3	A0225.3	A6205.3	A1175.3
	5.40	0.2126	28	66	A1205.4	A0225.4	A6205.4	A1175.4
	5.50	0.2165	28	66	A1205.5	A0225.5	A6205.5	A1175.5
7/32	5.56	0.2189	28	66	A1207/32			
7/32	5.56	0.2189	33	61		A0227/32		
	5.60	0.2205	28	66	A1205.6	A0225.6	A6205.6	A1175.6
	5.70	0.2244	28	66	A1205.7	A0225.7	A6205.7	A1175.7
	5.80	0.2283	28	66	A1205.8	A0225.8	A6205.8	A1175.8
	5.90	0.2323	28	66	A1205.9	A0225.9	A6205.9	A1175.9
15/64	5.95	0.2343	28	66	A12015/64			
15/64	5.95	0.2343	34	63		A02215/64		
	6.00	0.2362	28	66	A1206.0	A0226.0	A6206.0	A1176.0
	6.10	0.2402	31	70	A1206.1	A0226.1	A6206.1	A1176.1
	6.20	0.2441	31	70	A1206.2	A0226.2	A6206.2	A1176.2
	6.30	0.2480	31	70	A1206.3	A0226.3	A6206.3	A1176.3
1/4	6.35	0.2500	31	70	A1201/4			A1171/4
1/4	6.35	0.2500	36	65		A0221/4		
	6.40	0.2520	31	70	A1206.4	A0226.4	A6206.4	A1176.4
	6.50	0.2559	31	70	A1206.5	A0226.5	A6206.5	A1176.5
	6.60	0.2598	31	70	A1206.6	A0226.6	A6206.6	A1176.6
	6.70	0.2638	31	70	A1206.7	A0226.7	A6206.7	A1176.7
	6.80	0.2677	34	74	A1206.8	A0226.8	A6206.8	A1176.8
	6.90	0.2717	34	74	A1206.9	A0226.9	A6206.9	A1176.9
	7.00	0.2756	34	74	A1207.0	A0227.0	A6207.0	A1177.0
	7.10	0.2795	34	74	A1207.1	A0227.1	A6207.1	A1177.1
9/32	7.14	0.2811	34	74	A1209/32			
9/32	7.14	0.2811	40	70		A0229/32		
	7.20	0.2835	34	74	A1207.2	A0227.2	A6207.2	A1177.2
	7.30	0.2874	34	74	A1207.3	A0227.3	A6207.3	A1177.3
	7.40	0.2913	34	74	A1207.4	A0227.4	A6207.4	A1177.4
	7.50	0.2953	34	74	A1207.5	A0227.5	A6207.5	A1177.5
	7.60	0.2992	37	79	A1207.6	A0227.6	A6207.6	A1177.6
	7.70	0.3031	37	79	A1207.7	A0227.7	A6207.7	A1177.7
	7.80	0.3071	37	79	A1207.8	A0227.8	A6207.8	A1177.8
	7.90	0.3110	37	79	A1207.9	A0227.9	A6207.9	A1177.9
5/16	7.94	0.3126	37	79	A1205/16			A1175/16
5/16	7.94	0.3126	43	73		A0225/16		
	8.00	0.3150	37	79	A1208.0	A0228.0	A6208.0	A1178.0
	8.10	0.3189	37	79	A1208.1	A0228.1	A6208.1	A1178.1
	8.20	0.3228	37	79	A1208.2	A0228.2	A6208.2	A1178.2
	8.30	0.3268	37	79	A1208.3	A0228.3	A6208.3	A1178.3
	8.40	0.3307	37	79	A1208.4	A0228.4	A6208.4	A1178.4
	8.50	0.3346	37	79	A1208.5	A0228.5	A6208.5	A1178.5
	8.60	0.3386	40	84	A1208.6	A0228.6	A6208.6	A1178.6
	8.70	0.3425	40	84	A1208.7	A0228.7	A6208.7	A1178.7
11/32	8.73	0.3437	40	84	A12011/32			
11/32	8.73	0.3437	45	78		A02211/32		
	8.80	0.3465	40	84	A1208.8	A0228.8	A6208.8	A1178.8
	8.90	0.3504	40	84	A1208.9	A0228.9	A6208.9	A1178.9
	9.00	0.3543	40	84	A1209.0	A0229.0	A6209.0	A1179.0
	9.10	0.3583	40	84	A1209.1	A0229.1	A6209.1	A1179.1

DORMER

d_1 Øh_8 Inch	d_1 Øh_8 mm	d_1 decimal Inch	l_2 mm	l_1 mm	A120	A022	A620	A117
	9.20	0.3622	40	84	A1209.2	A0229.2	A6209.2	A1179.2
	9.30	0.3661	40	84	A1209.3	A0229.3	A6209.3	A1179.3
	9.40	0.3701	40	84	A1209.4	A0229.4	A6209.4	A1179.4
	9.50	0.3740	40	84	A1209.5	A0229.5	A6209.5	A1179.5
3/8	9.52	0.3748	43	89	A1203/8			A1173/8
3/8	9.52	0.3748	48	81		A0223/8		
	9.60	0.3780	43	89	A1209.6	A0229.6	A6209.6	A1179.6
	9.70	0.3819	43	89	A1209.7	A0229.7	A6209.7	A1179.7
	9.80	0.3858	43	89	A1209.8	A0229.8	A6209.8	A1179.8
	9.90	0.3898	43	89	A1209.9	A0229.9	A6209.9	A1179.9
	10.00	0.3937	43	89	A12010.0	A02210.0	A62010.0	A11710.0
	10.10	0.3976	43	89	A12010.1	A02210.1		
	10.20	0.4016	43	89	A12010.2	A02210.2	A62010.2	A11710.2
	10.30	0.4055	43	89	A12010.3	A02210.3	A62010.3	
13/32	10.32	0.4063	43	89	A12013/32			
13/32	10.32	0.4063	51	86		A02213/32		
	10.40	0.4094	43	89	A12010.4	A02210.4	A62010.4	
	10.50	0.4134	43	89	A12010.5	A02210.5	A62010.5	A11710.5
	10.60	0.4173	43	89	A12010.6	A02210.6		
	10.70	0.4213	47	95	A12010.7	A02210.7		
	10.80	0.4252	47	95	A12010.8	A02210.8	A62010.8	
	10.90	0.4291	47	95	A12010.9	A02210.9		
	11.00	0.4331	47	95	A12011.0	A02211.0	A62011.0	A11711.0
	11.10	0.4370	47	95	A12011.1	A02211.1		
7/16	11.11	0.4374	47	95	A1207/16			
7/16	11.11	0.4374	54	89		A0227/16		
	11.20	0.4409	47	95	A12011.2	A02211.2		
	11.30	0.4449	47	95	A12011.3	A02211.3		
	11.50	0.4528	47	95	A12011.5	A02211.5	A62011.5	A11711.5
	11.60	0.4567	47	95	A12011.6	A02211.6		
	11.70	0.4606	47	95	A12011.7	A02211.7		
	11.80	0.4646	47	95	A12011.8	A02211.8		
	11.90	0.4685	51	102	A12011.9	A02211.9		
	12.00	0.4724	51	102	A12012.0	A02212.0	A62012.0	A11712.0
	12.10	0.4764	51	102	A12012.1	A02212.1		
	12.20	0.4803	51	102	A12012.2	A02212.2	A62012.2	
	12.50	0.4921	51	102	A12012.5	A02212.5	A62012.5	
1/2	12.70	0.5000	51	102	A1201/2			A1171/2
1/2	12.70	0.5000	60	98		A0221/2		
	12.80	0.5039	51	102			A62012.8	
	13.00	0.5118	51	102	A12013.0	A02213.0	A62013.0	A11713.0
	13.50	0.5315	54	107	A12013.5	A02213.5		
	14.00	0.5512	54	107	A12014.0	A02214.0		
9/16	14.29	0.5626	56	111	A1209/16			
9/16	14.29	0.5626	67	105		A0229/16		
	14.50	0.5709	56	111	A12014.5	A02214.5		
	15.00	0.5906	56	111	A12015.0	A02215.0		
	15.50	0.6102	58	115	A12015.5	A02215.5		
5/8	15.88	0.6252	58	115	A1205/8			
5/8	15.88	0.6252	73	111		A0225/8		
	16.00	0.6299	58	115	A12016.0	A02216.0		
	16.50	0.6496	60	119	A12016.5			
	17.00	0.6693	60	119	A12017.0			
11/16	17.46	0.6874	62	123	A12011/16			
	17.50	0.6890	62	123	A12017.5			
	18.00	0.7087	62	123	A12018.0			
	18.50	0.7283	64	127	A12018.5			
	19.00	0.7480	64	127	A12019.0			
3/4	19.05	0.7500	66	131	A1203/4			
	19.50	0.7677	66	131	A12019.5			
	20.00	0.7874	66	131	A12020.0			
	20.50	0.8071	68	136	A12020.5			
13/16	20.64	0.8126	68	136	A12013/16			
	21.00	0.8268	68	136	A12021.0			
	22.00	0.8661	70	141	A12022.0			
7/8	22.22	0.8748	70	141	A1207/8			
	23.00	0.9055	72	146	A12023.0			
15/16	23.81	0.9374	75	151	A12015/16			
	24.00	0.9449	75	151	A12024.0			
	25.00	0.9843	75	151	A12025.0			

A520

- ADX 短型钻头
- Broca ADX Serie Extra Curta
- Broca ADX , serie extra corta
- ADX Stub Drill

A520		
	▪	1.1 1.2 1.3 1.4 1.5 2.1 2.2 2.3 3.1 3.2 3.3 3.4 4.1 4.2 6.2 6.3 7.2 7.3 7.4 8.2 8.3
	•	1.6 4.3 5.1 5.2 5.3 6.1 6.4 7.1 8.1

A520 HSS DIN 1897 2.5XD 130° TiN

A520

ADX

3.00 - 13.00

d_1 Øh_8 Inch	d_1 Øh_8 mm	d_1 decimal Inch	l_2 mm	l_1 mm	A520
	3.00	0.1181	16	46	A5203.0
	3.10	0.1220	18	49	A5203.1
1/8	3.18	0.1252	18	49	A5201/8
	3.20	0.1260	18	49	A5203.2
	3.30	0.1299	18	49	A5203.3
	3.40	0.1339	20	52	A5203.4
	3.50	0.1378	20	52	A5203.5
9/64	3.57	0.1406	20	52	A5209/64
	3.60	0.1417	20	52	A5203.6
	3.70	0.1457	20	52	A5203.7
	3.80	0.1496	22	55	A5203.8
	3.90	0.1535	22	55	A5203.9
5/32	3.97	0.1563	22	55	A5205/32
	4.00	0.1575	22	55	A5204.0
	4.10	0.1614	22	55	A5204.1
	4.20	0.1654	22	55	A5204.2
	4.30	0.1693	24	58	A5204.3
11/64	4.37	0.1720	24	58	A52011/64
	4.40	0.1732	24	58	A5204.4
	4.50	0.1772	24	58	A5204.5
	4.60	0.1811	24	58	A5204.6
	4.70	0.1850	24	58	A5204.7
3/16	4.76	0.1874	26	62	A5203/16
	4.80	0.1890	26	62	A5204.8
	4.90	0.1929	26	62	A5204.9
	5.00	0.1969	26	62	A5205.0
	5.10	0.2008	26	62	A5205.1
13/64	5.16	0.2031	26	62	A52013/64
	5.20	0.2047	26	62	A5205.2
	5.30	0.2087	26	62	A5205.3
	5.40	0.2126	28	66	A5205.4
	5.50	0.2165	28	66	A5205.5
7/32	5.56	0.2189	28	66	A5207/32
	5.60	0.2205	28	66	A5205.6
	5.70	0.2244	28	66	A5205.7
	5.80	0.2283	28	66	A5205.8
	5.90	0.2323	28	66	A5205.9
15/64	5.95	0.2343	28	66	A52015/64

d_1 Øh_8 Inch	d_1 Øh_8 mm	d_1 decimal Inch	l_2 mm	l_1 mm	A520
	6.00	0.2362	28	66	A5206.0
	6.10	0.2402	31	70	A5206.1
	6.20	0.2441	31	70	A5206.2
	6.30	0.2480	31	70	A5206.3
1/4	6.35	0.2500	31	70	A5201/4
	6.40	0.2520	31	70	A5206.4
	6.50	0.2559	31	70	A5206.5
	6.60	0.2598	31	70	A5206.6
	6.70	0.2638	31	70	A5206.7
17/64	6.75	0.2657	34	74	A52017/64
	6.80	0.2677	34	74	A5206.8
	6.90	0.2717	34	74	A5206.9
	7.00	0.2756	34	74	A5207.0
	7.10	0.2795	34	74	A5207.1
9/32	7.14	0.2811	34	74	A5209/32
	7.20	0.2835	34	74	A5207.2
	7.30	0.2874	34	74	A5207.3
	7.40	0.2913	34	74	A5207.4
	7.50	0.2953	34	74	A5207.5
19/64	7.54	0.2969	37	79	A52019/64
	7.60	0.2992	37	79	A5207.6
	7.70	0.3031	37	79	A5207.7
	7.80	0.3071	37	79	A5207.8
	7.90	0.3110	37	79	A5207.9
5/16	7.94	0.3126	37	79	A5205/16
	8.00	0.3150	37	79	A5208.0
	8.10	0.3189	37	79	A5208.1
	8.20	0.3228	37	79	A5208.2
	8.30	0.3268	37	79	A5208.3
21/64	8.33	0.3280	37	79	A52021/64
	8.40	0.3307	37	79	A5208.4
	8.50	0.3346	37	79	A5208.5
	8.60	0.3386	40	84	A5208.6
	8.70	0.3425	40	84	A5208.7
11/32	8.73	0.3437	40	84	A52011/32
	8.80	0.3465	40	84	A5208.8
	8.90	0.3504	40	84	A5208.9
	9.00	0.3543	40	84	A5209.0
	9.10	0.3583	40	84	A5209.1
23/64	9.13	0.3594	40	84	A52023/64
	9.20	0.3622	40	84	A5209.2
	9.30	0.3661	40	84	A5209.3
	9.40	0.3701	40	84	A5209.4
	9.50	0.3740	40	84	A5209.5
3/8	9.52	0.3748	43	89	A5203/8
	9.60	0.3780	43	89	A5209.6
	9.70	0.3819	43	89	A5209.7
	9.80	0.3858	43	89	A5209.8
	9.90	0.3898	43	89	A5209.9
25/64	9.92	0.3906	43	89	A52025/64
	10.00	0.3937	43	89	A52010.0
	10.10	0.3976	43	89	A52010.1
	10.20	0.4016	43	89	A52010.2
	10.30	0.4055	43	89	A52010.3
13/32	10.32	0.4063	43	89	A52013/32
	10.40	0.4094	43	89	A52010.4
	10.50	0.4134	43	89	A52010.5
	10.60	0.4173	43	89	A52010.6
	10.70	0.4213	47	95	A52010.7
27/64	10.72	0.4220	47	95	A52027/64
	10.80	0.4252	47	95	A52010.8
	10.90	0.4291	47	95	A52010.9
	11.00	0.4331	47	95	A52011.0
	11.10	0.4370	47	95	A52011.1
7/16	11.11	0.4374	47	95	A5207/16
	11.20	0.4409	47	95	A52011.2
	11.30	0.4449	47	95	A52011.3
	11.40	0.4488	47	95	A52011.4
	11.50	0.4528	47	95	A52011.5
29/64	11.51	0.4531	47	95	A52029/64

d_1 Øh_8 Inch	d_1 Øh_8 mm	d_1 decimal Inch	l_2 mm	l_1 mm	A520
	11.60	0.4567	47	95	A52011.6
	11.70	0.4606	47	95	A52011.7
	11.80	0.4646	47	95	A52011.8
	11.90	0.4685	51	102	A52011.9
15/32	11.91	0.4689	51	102	A52015/32
	12.00	0.4724	51	102	A52012.0
	12.10	0.4764	51	102	A52012.1
	12.20	0.4803	51	102	A52012.2
	12.30	0.4843	51	102	A52012.3
31/64	12.30	0.4843	51	102	A52031/64
	12.40	0.4882	51	102	A52012.4
	12.50	0.4921	51	102	A52012.5
	12.60	0.4961	51	102	A52012.6
	12.70	0.5000	51	102	A52012.7
1/2	12.70	0.5000	51	102	A5201/2
	12.80	0.5039	51	102	A52012.8
	12.90	0.5079	51	102	A52012.9
	13.00	0.5118	51	102	A52013.0

A124

- 四后面型钻尖的焊接硬质合金式短型钻头
- Broca Serie Extra Curta com afiação em cruz e ponta de metal duro
- Broca extra corta 4 caras con punta soldada de metal duro
- Stub Drill with 4 facet ground Brazed Carbide Tip

扁尾符合 DIN 1809
Arraste de acordo com a DIN 1809
Lengüeta según DIN 1809
Tang to DIN 1809

A124																
	▪	3.1	3.2	3.3	3.4											
	•	1.5	1.6	2.2	2.3	4.1	4.2	4.3	5.1	5.2	5.3	6.2	6.3	6.4	8.2	9.1

A124 HSS HM | DIN 8037 | 2.5XD | 118° | ST | H

A124

3.00 - 16.00

d_1 Ø mm	d_1 decimal Inch	l_2 mm	l_1 mm	A124
3.00	0.1181	20	50	A1243.0
3.20	0.1260	25	56	A1243.2
3.50	0.1378	25	56	A1243.5
4.00	0.1575	25	56	A1244.0
4.20	0.1654	28	63	A1244.2
4.50	0.1772	28	63	A1244.5
4.80	0.1890	28	63	A1244.8
5.00	0.1969	28	63	A1245.0
5.20	0.2047	32	71	A1245.2
5.50	0.2165	32	71	A1245.5
5.80	0.2283	32	71	A1245.8
6.00	0.2362	32	71	A1246.0
6.50	0.2559	32	71	A1246.5
6.80	0.2677	40	80	A1246.8
7.00	0.2756	40	80	A1247.0
7.50	0.2953	40	80	A1247.5
8.00	0.3150	40	80	A1248.0
8.50	0.3346	50	90	A1248.5
9.00	0.3543	50	90	A1249.0
9.50	0.3740	50	90	A1249.5
10.00	0.3937	56	100	A12410.0
10.50	0.4134	56	100	A12410.5
11.00	0.4331	56	100	A12411.0
11.50	0.4528	63	112	A12411.5
12.00	0.4724	63	112	A12412.0
13.00	0.5118	63	112	A12413.0
14.00	0.5512	71	125	A12414.0
15.00	0.5906	71	125	A12415.0
16.00	0.6299	80	140	A12416.0

A720

- 微型钻头
- Micro Brocas
- Micro Broca
- Micro Drill

A720		
	■	1.1 1.2 1.3 1.4 3.1 3.2
	•	1.5 1.6 2.1 2.2 2.3 3.3 3.4 4.1 4.2 4.3 5.1 5.2 5.3 6.1 6.2 6.3 6.4 7.1 7.2 7.3 7.4 8.1 8.2

A720 HSS-E DIN 1899 2.5XD 118° N

A720

0.15 - 1.40

d_1 Ø mm	d_1 decimal Inch	l_2 mm	l_1 mm	d_2 Ø mm	A720
0.15	0.0059	1.0	25	1	A720.15
0.16	0.0063	1.4	25	1	A720.16
0.17	0.0067	1.4	25	1	A720.17
0.18	0.0070	1.4	25	1	A720.18
0.20	0.0078	1.8	25	1	A720.2
0.22	0.0087	1.8	25	1	A720.22
0.25	0.0098	2.2	25	1	A720.25
0.27	0.0106	2.2	25	1	A720.27
0.28	0.0110	2.2	25	1	A720.28
0.30	0.0118	2.2	25	1	A720.3
0.35	0.0138	2.8	25	1	A720.35
0.38	0.0150	2.8	25	1	A720.38
0.39	0.0154	3.6	25	1	A720.39
0.40	0.0157	3.6	25	1	A720.4
0.45	0.0177	3.6	25	1	A720.45
0.50	0.0197	4.0	25	1	A720.5
0.55	0.0217	4.5	25	1	A720.55
0.60	0.0236	4.5	25	1	A720.6
0.62	0.0244	5.0	25	1	A720.62
0.65	0.0256	5.0	25	1	A720.65
0.70	0.0276	5.6	25	1	A720.7
0.75	0.0295	5.6	25	1	A720.75
0.80	0.0315	6.3	25	1.5	A720.8
0.85	0.0335	6.3	25	1.5	A720.85
0.90	0.0354	7.1	25	1.5	A720.9
0.95	0.0374	7.1	25	1.5	A720.95
1.00	0.0394	8.0	25	1.5	A7201.0
1.05	0.0413	8.0	25	1.5	A7201.05
1.10	0.0433	9.0	25	1.5	A7201.1
1.20	0.0472	10.0	25	1.5	A7201.2
1.30	0.0512	10.0	25	1.5	A7201.3
1.40	0.0551	11.2	25	1.5	A7201.4

A920
A921

- PFX 短型钻头
- PFX - Broca Serie Extra Curta
- Broca PFX Extra Corta
- PFX Stub Drill

A920	▪	1.1 1.2 1.3 1.4 1.5 1.6 2.1 2.2 2.3 4.1 4.2 4.3 5.1 5.2 5.3 7.2
	•	3.1 3.2 3.3 3.4 6.1 6.2 6.3 6.4 7.1 7.3 7.4 8.1 8.2
A921	▪	1.1 1.2 1.3 1.4 1.5 1.6 2.1 2.2 2.3 3.1 3.2 3.3 3.4 7.4
	•	4.1 4.2 4.3 5.1 5.2 5.3 6.3 6.4

A920	HSS-E	DIN ANSI	3XD	130°			W			
A921	HSS-E	DIN ANSI	3XD	130°	Alcrona Top		W			

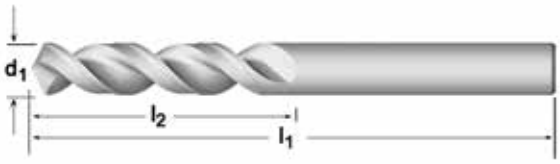

A920	A921
	
PFX 1.00 - 20.00	PFX 2.50 - 16.00

d_1 Øh_8 Inch	d_1 Øh_8 mm	d_1 decimal Inch	l_2 mm	l_1 mm	A920	A921
	1.00	0.0394	6	26	A9201.0	
	1.10	0.0433	7	28	A9201.1	
3/64	1.19	0.0469	13	35	A9203/64	
	1.20	0.0472	8	30	A9201.2	
	1.25	0.0492	8	30	A9201.25	
	1.30	0.0512	8	30	A9201.3	
	1.35	0.0531	9	32	A9201.35	
	1.40	0.0551	9	32	A9201.4	
	1.50	0.0591	9	32	A9201.5	
	1.55	0.0610	10	34	A9201.55	
1/16	1.59	0.0626	16	41	A9201/16	
	1.60	0.0630	10	34	A9201.6	
	1.70	0.0669	10	34	A9201.7	
	1.75	0.0689	11	36	A9201.75	
	1.80	0.0709	11	36	A9201.8	
	1.90	0.0748	11	36	A9201.9	
5/64	1.98	0.0780	17	43	A9205/64	
	2.00	0.0787	12	38	A9202.0	
	2.10	0.0827	12	38	A9202.1	
	2.15	0.0846	13	40	A9202.15	
	2.20	0.0866	13	40	A9202.2	
	2.30	0.0906	13	40	A9202.3	
	2.35	0.0925	14	43	A9202.35	
3/32	2.38	0.0937	19	41	A9203/32	
	2.40	0.0945	14	43	A9202.4	
	2.50	0.0984	14	43	A9202.5	A9212.5
	2.60	0.1024	14	43	A9202.6	A9212.6
	2.70	0.1063	16	46	A9202.7	A9212.7
7/64	2.78	0.1094	21	46	A9207/64	A9217/64
	2.80	0.1102	16	46	A9202.8	
	2.90	0.1142	16	46	A9202.9	A9212.9
	3.00	0.1181	16	46	A9203.0	A9213.0

d_1 Øh$_8$ Inch	d_1 Øh$_8$ mm	d_1 decimal Inch	l_2 mm	l_1 mm	A920	A921
	3.10	0.1220	18	49	A9203.1	A9213.1
1/8	3.18	0.1252	22	48	A9201/8	A9211/8
	3.20	0.1260	18	49	A9203.2	A9213.2
	3.30	0.1299	18	49	A9203.3	A9213.3
	3.40	0.1339	20	52	A9203.4	A9213.4
	3.50	0.1378	20	52	A9203.5	A9213.5
9/64	3.57	0.1406	24	49	A9209/64	A9219/64
	3.60	0.1417	20	52	A9203.6	A9213.6
	3.70	0.1457	20	52	A9203.7	A9213.7
	3.80	0.1496	22	55	A9203.8	A9213.8
	3.90	0.1535	22	55	A9203.9	A9213.9
5/32	3.97	0.1563	25	52	A9205/32	A9215/32
	4.00	0.1575	22	55	A9204.0	A9214.0
	4.10	0.1614	22	55	A9204.1	A9214.1
	4.20	0.1654	22	55	A9204.2	A9214.2
	4.30	0.1693	24	58	A9204.3	A9214.3
11/64	4.37	0.1720	27	54	A92011/64	A92111/64
	4.40	0.1732	24	58	A9204.4	A9214.4
	4.50	0.1772	24	58	A9204.5	A9214.5
	4.60	0.1811	24	58	A9204.6	A9214.6
	4.70	0.1850	24	58	A9204.7	A9214.7
3/16	4.76	0.1874	29	56	A9203/16	A9213/16
	4.80	0.1890	26	62	A9204.8	A9214.8
	4.90	0.1929	26	62	A9204.9	A9214.9
	5.00	0.1969	26	62	A9205.0	A9215.0
	5.10	0.2008	26	62	A9205.1	A9215.1
13/64	5.16	0.2031	30	57	A92013/64	A92113/64
	5.20	0.2047	26	62	A9205.2	A9215.2
	5.30	0.2087	26	62	A9205.3	A9215.3
	5.40	0.2126	28	66	A9205.4	A9215.4
	5.50	0.2165	28	66	A9205.5	A9215.5
7/32	5.56	0.2189	32	60	A9207/32	A9217/32
	5.60	0.2205	28	66	A9205.6	A9215.6
	5.70	0.2244	28	66	A9205.7	A9215.7
	5.80	0.2283	28	66	A9205.8	A9215.8
	5.90	0.2323	28	66	A9205.9	A9215.9
15/64	5.95	0.2343	33	62	A92015/64	A92115/64
	6.00	0.2362	28	66	A9206.0	A9216.0
	6.10	0.2402	31	70	A9206.1	A9216.1
	6.20	0.2441	31	70	A9206.2	A9216.2
	6.30	0.2480	31	70	A9206.3	A9216.3
1/4	6.35	0.2500	35	64	A9201/4	A9211/4
	6.40	0.2520	31	70	A9206.4	A9216.4
	6.50	0.2559	31	70	A9206.5	A9216.5
	6.60	0.2598	31	70	A9206.6	A9216.6
	6.70	0.2638	31	70	A9206.7	A9216.7
17/64	6.75	0.2657	37	67	A92017/64	A92117/64
	6.80	0.2677	34	74	A9206.8	A9216.8
	6.90	0.2717	34	74	A9206.9	A9216.9
	7.00	0.2756	34	74	A9207.0	A9217.0
	7.10	0.2795	34	74	A9207.1	A9217.1
9/32	7.14	0.2811	38	68	A9209/32	A9219/32
	7.20	0.2835	34	74	A9207.2	A9217.2
	7.30	0.2874	34	74	A9207.3	A9217.3
	7.40	0.2913	34	74	A9207.4	A9217.4
	7.50	0.2953	34	74	A9207.5	A9217.5
19/64	7.54	0.2969	40	70	A92019/64	A92119/64
	7.60	0.2992	37	79	A9207.6	A9217.6
	7.70	0.3031	37	79	A9207.7	A9217.7
	7.80	0.3071	37	79	A9207.8	A9217.8
	7.90	0.3110	37	79	A9207.9	A9217.9
5/16	7.94	0.3126	41	71	A9205/16	A9215/16
	8.00	0.3150	37	79	A9208.0	A9218.0
	8.10	0.3189	37	79	A9208.1	A9218.1
	8.20	0.3228	37	79	A9208.2	A9218.2
	8.30	0.3268	37	79	A9208.3	A9218.3
21/64	8.33	0.3280	43	75	A92021/64	A92121/64
	8.40	0.3307	37	79	A9208.4	A9218.4
	8.50	0.3346	37	79	A9208.5	A9218.5
	8.60	0.3386	40	84	A9208.6	A9218.6

d_1 Øh_8 Inch	d_1 Øh_8 mm	d_1 decimal Inch	l_2 mm	l_1 mm	A920	A921
	8.70	0.3425	40	84	A9208.7	A9218.7
11/32	8.73	0.3437	43	76	A92011/32	A92111/32
	8.80	0.3465	40	84	A9208.8	A9218.8
	8.90	0.3504	40	84	A9208.9	A9218.9
	9.00	0.3543	40	84	A9209.0	A9219.0
	9.10	0.3583	40	84	A9209.1	A9219.1
23/64	9.13	0.3594	44	78	A92023/64	A92123/64
	9.20	0.3622	40	84	A9209.2	A9219.2
	9.30	0.3661	40	84	A9209.3	A9219.3
	9.40	0.3701	40	84	A9209.4	A9219.4
	9.50	0.3740	40	84	A9209.5	A9219.5
3/8	9.52	0.3748	46	79	A9203/8	A9213/8
	9.60	0.3780	43	89	A9209.6	A9219.6
	9.70	0.3819	43	89	A9209.7	A9219.7
	9.80	0.3858	43	89	A9209.8	A9219.8
	9.90	0.3898	43	89	A9209.9	A9219.9
25/64	9.92	0.3906	48	83	A92025/64	A92125/64
	10.00	0.3937	43	89	A92010.0	A92110.0
	10.20	0.4016	43	89	A92010.2	A92110.2
	10.30	0.4055	43	89	A92010.3	A92110.3
13/32	10.32	0.4063	49	84	A92013/32	A92113/32
	10.50	0.4134	43	89	A92010.5	A92110.5
27/64	10.72	0.4220	51	86	A92027/64	A92127/64
	10.80	0.4252	47	95	A92010.8	A92110.8
	11.00	0.4331	47	95	A92011.0	A92111.0
7/16	11.11	0.4374	52	87	A9207/16	A9217/16
	11.50	0.4528	47	95	A92011.5	A92111.5
29/64	11.51	0.4531	54	90	A92029/64	A92129/64
	11.80	0.4646	47	95	A92011.8	A92111.8
15/32	11.91	0.4689	54	92	A92015/32	A92115/32
	12.00	0.4724	51	102	A92012.0	A92112.0
	12.20	0.4803	51	102	A92012.2	
31/64	12.30	0.4843	56	94	A92031/64	A92131/64
	12.50	0.4921	51	102	A92012.5	A92112.5
1/2	12.70	0.5000	57	95	A9201/2	A9211/2
	13.00	0.5118	51	102	A92013.0	A92113.0
33/64	13.10	0.5157	60	98	A92033/64	A92133/64
	13.50	0.5315	54	107	A92013.5	A92113.5
35/64	13.89	0.5469	64	102	A92035/64	A92135/64
	14.00	0.5512	54	107	A92014.0	A92114.0
9/16	14.29	0.5626	64	102	A9209/16	A9219/16
	14.50	0.5709	56	111	A92014.5	A92114.5
37/64	14.68	0.5780	67	105	A92037/64	A92137/64
	14.75	0.5807	56	111	A92014.75	A92114.75
	15.00	0.5906	56	111	A92015.0	A92115.0
19/32	15.08	0.5937	67	105	A92019/32	A92119/32
39/64	15.48	0.6094	70	108	A92039/64	A92139/64
	15.50	0.6102	58	115	A92015.5	A92115.5
5/8	15.88	0.6252	70	108	A9205/8	A9215/8
	16.00	0.6299	58	115	A92016.0	A92116.0
41/64	16.27	0.6406	73	114	A92041/64	
	16.50	0.6496	60	119	A92016.5	
21/32	16.67	0.6563	73	114	A92021/32	
	16.75	0.6594	60	119	A92016.75	
	17.00	0.6693	60	119	A92017.0	
43/64	17.07	0.6720	73	117	A92043/64	
11/16	17.46	0.6874	73	117	A92011/16	
	17.50	0.6890	62	123	A92017.5	
45/64	17.86	0.7031	76	121	A92045/64	
	18.00	0.7087	62	123	A92018.0	
23/32	18.26	0.7189	76	121	A92023/32	
	18.50	0.7283	64	127	A92018.5	
47/64	18.65	0.7343	79	127	A92047/64	
	19.00	0.7480	64	127	A92019.0	
3/4	19.05	0.7500	79	127	A9203/4	
49/64	19.45	0.7657	83	130	A92049/64	
	19.50	0.7677	66	131	A92019.5	
25/32	19.84	0.7811	83	130	A92025/32	
	20.00	0.7874	66	131	A92020.0	

A002

- 002分离式钻尖的普通钻头 — 小于 2.0 mm 为光亮表面, 2.0 mm 及以上为端部涂 TiN 的分离式钻尖
- 002 Broca Serie Curta — Brilhante Abaixo de 2.0mm. Ponta com TiN e afiação em Cruz a partir de 2.0mm
- 002 Brocas serie corta autocentrante — Brillante por debajo de 2.0mm, Punta de TiN y rectificado de la punta a partir 2.0mm
- 002 Jobber Drill Split Point — Bright below 2.0mm, TiN Tipped and Split Point 2.0mm and above

A002S

- 002分离式钻尖的普通钻头-袋包装 — 顶端涂 TiN
- Broca 002 em embalagem individual — Ponta de TiN - Afiação em Cruz
- 002 Brocas serie corte autocentrante - Blister — Punta de TiN
- 002 Jobber Drill Split Point - Pouch Pack — TiN Tipped

A100

- 普通长度钻头 — 小于1.0 mm, 3/46" 和 N60 为光亮
- Broca Série Curta — Brilhante abaixo de 1,0mm, 3/64'', N60
- Broca , serie corta — Brillante por debajo de 1,0 mm, 3/64".N60
- Jobber Drill — Bright below 1.0mm, 3/64", N60

A101

- 普通长度钻头 - 左旋 — 小于3.0 mm 为光亮
- Broca Série Curta - Esquerda — Brilhante abaixo de 3.0mm
- Broca , serie corta - Izquierdas — Brillante por debajo de 3,0 mm
- Jobber Drill - LH — Bright below 3.0mm

A002; A002S	▪	1.1 1.2 1.3 1.4 3.1 3.2 7.1 7.2 8.1 8.2
	•	1.5 1.6 2.1 2.2 2.3 3.3 3.4 4.1 4.2 4.3 5.1 5.2 5.3 6.1 6.2 6.3 6.4 7.3 9.1
A100; A101	▪	1.1 1.2 1.3 1.4 3.1 3.2
	•	1.5 1.6 2.1 2.2 2.3 3.3 3.4 4.1 4.2 4.3 5.1 5.2 5.3 6.1 6.2 6.3 6.4 7.1 7.4 8.1 8.2 8.3 9.1

A002	HSS	DIN 338	4XD	118°	TiN		N										
	A087 126	A089 128	A094 127	A095 125	A099 129	L000 336	L001 337	L002 338	L113 333	L114 334	L115 335						
A002S	HSS	DIN 338	4XD	118°	TiN		N										
A100	HSS	DIN 338	4XD	118°	ST		N		A190 132	A191 133	A199 130						
A101	HSS	DIN 338	4XD	118°	ST		N										

DORMER

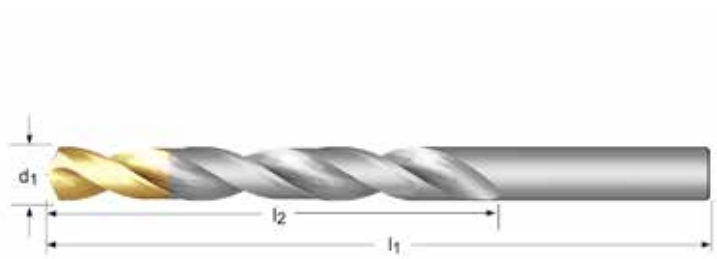

A002	A002S	A100	A101
			
1.00 - 16.00	2.00 - 13.00	0.20 - 20.00	1.00 - 12.00

d_1 Øh_8 "/Nr./letter	d_1 Øh_8 mm	d_1 decimal Inch	l_2 mm	l_1 mm	A002	A002S	A100	A101
	0.20	0.0079	2.5	19			A100.2	
	0.25	0.0098	3	19			A100.25	
	0.30	0.0118	3	19			A100.3	
	0.32	0.0126	4	19			A100.32	
80	0.34	0.0134	4	19			A100N80	
	0.35	0.0138	4	19			A100.35	
79	0.37	0.0146	4	19			A100N79	
	0.38	0.0150	4	19			A100.38	
1/64	0.40	0.0157	5	20			A1001/64	
	0.40	0.0157	5	20			A100.4	
78	0.41	0.0161	5	20			A100N78	
	0.42	0.0165	5	20			A100.42	
	0.45	0.0177	5	20			A100.45	
77	0.46	0.0181	5	20			A100N77	
	0.48	0.0189	5	20			A100.48	
	0.50	0.0197	6	22			A100.5	
76	0.51	0.0201	6	22			A100N76	
	0.52	0.0205	6	22			A100.52	
75	0.53	0.0209	6	22			A100N75	
	0.55	0.0217	7	24			A100.55	
74	0.57	0.0224	7	24			A100N74	
	0.58	0.0228	7	24			A100.58	
	0.60	0.0236	7	24			A100.6	
73	0.61	0.0240	8	26			A100N73	
	0.62	0.0244	8	26			A100.62	
72	0.64	0.0252	8	26			A100N72	
	0.65	0.0256	8	26			A100.65	
71	0.66	0.0260	8	26			A100N71	
	0.68	0.0268	9	28			A100.68	
	0.70	0.0276	9	28			A100.7	
70	0.71	0.0280	9	28			A100N70	
	0.72	0.0283	9	28			A100.72	
69	0.74	0.0291	9	28			A100N69	
	0.75	0.0295	9	28			A100.75	
68	0.79	0.0311	10	30			A100N68	
	0.78	0.0307	10	30			A100.78	
1/32	0.79	0.0311	10	30			A1001/32	
	0.80	0.0315	10	30			A100.8	
67	0.81	0.0319	10	30			A100N67	
	0.82	0.0323	10	30			A100.82	
66	0.84	0.0331	10	30			A100N66	
	0.85	0.0335	10	30			A100.85	
	0.88	0.0346	11	32			A100.88	
65	0.89	0.0350	11	32			A100N65	
	0.90	0.0354	11	32			A100.9	
64	0.91	0.0358	11	32			A100N64	
	0.92	0.0362	11	32			A100.92	
63	0.94	0.0370	11	32			A100N63	

d_1 Øh_8 "/Nr./letter	d_1 Øh_8 mm	d_1 decimal Inch	l_2 mm	l_1 mm	A002	A002S	A100	A101
	0.95	0.0374	11	32			A100.95	
62	0.97	0.0382	12	34			A100N62	
	0.98	0.0386	12	34			A100.98	
61	0.99	0.0390	12	34			A100N61	
	1.00	0.0394	12	34	A0021.0		A1001.0	A1011.0
60	1.02	0.0402	12	34			A100N60	
59	1.04	0.0409	12	34			A100N59	
	1.05	0.0413	12	34			A1001.05	
58	1.07	0.0421	14	36			A100N58	
57	1.09	0.0429	14	36			A100N57	
	1.10	0.0433	14	36	A0021.1		A1001.1	A1011.1
	1.15	0.0453	14	36			A1001.15	
56	1.18	0.0465	14	36			A100N56	
3/64	1.19	0.0469	16	38	A0023/64		A1003/64	
	1.20	0.0472	16	38	A0021.2		A1001.2	A1011.2
	1.25	0.0492	16	38			A1001.25	A1011.25
	1.30	0.0512	16	38	A0021.3		A1001.3	A1011.3
55	1.32	0.0520	16	38			A100N55	
	1.35	0.0531	18	40			A1001.35	
	1.40	0.0551	18	40	A0021.4		A1001.4	A1011.4
54	1.40	0.0551	18	40			A100N54	
	1.45	0.0571	18	40			A1001.45	
	1.50	0.0591	18	40	A0021.5		A1001.5	A1011.5
53	1.51	0.0594	20	43			A100N53	
	1.55	0.0610	20	43			A1001.55	
1/16	1.59	0.0626	20	43	A0021/16		A1001/16	
	1.60	0.0630	20	43	A0021.6		A1001.6	A1011.6
52	1.61	0.0634	20	43			A100N52	
	1.65	0.0650	20	43			A1001.65	
	1.70	0.0669	20	43	A0021.7		A1001.7	A1011.7
51	1.70	0.0669	22	46			A100N51	
	1.75	0.0689	22	46			A1001.75	
50	1.78	0.0701	22	46			A100N50	
	1.80	0.0709	22	46	A0021.8		A1001.8	A1011.8
	1.85	0.0728	22	46			A1001.85	
49	1.85	0.0728	22	46			A100N49	
	1.90	0.0748	22	46	A0021.9		A1001.9	A1011.9
48	1.93	0.0760	24	49			A100N48	
	1.95	0.0768	24	49			A1001.95	
5/64	1.98	0.0780	24	49	A0025/64		A1005/64	
47	1.99	0.0783	24	49			A100N47	
	2.00	0.0787	24	49	A0022.0	A002S2.0 [2]	A1002.0	A1012.0
	2.05	0.0807	24	49			A1002.05	
46	2.06	0.0811	24	49			A100N46	
45	2.08	0.0819	24	49			A100N45	
	2.10	0.0827	24	49	A0022.1		A1002.1	A1012.1
	2.15	0.0846	27	53			A1002.15	
44	2.18	0.0858	27	53			A100N44	
	2.20	0.0866	27	53	A0022.2		A1002.2	A1012.2
	2.25	0.0886	27	53			A1002.25	
43	2.26	0.0890	27	53			A100N43	
	2.30	0.0906	27	53	A0022.3		A1002.3	A1012.3
	2.35	0.0925	27	53			A1002.35	
42	2.38	0.0937	30	57			A100N42	
3/32	2.38	0.0937	30	57	A0023/32		A1003/32	
	2.40	0.0945	30	57	A0022.4		A1002.4	A1012.4
41	2.44	0.0961	30	57			A100N41	
	2.45	0.0965	30	57			A1002.45	
40	2.49	0.0980	30	57			A100N40	
	2.50	0.0984	30	57	A0022.5	A002S2.5 [2]	A1002.5	A1012.5
39	2.53	0.0996	30	57			A100N39	
	2.55	0.1004	30	57			A1002.55	
38	2.58	0.1016	30	57			A100N38	
	2.60	0.1024	30	57	A0022.6		A1002.6	A1012.6
37	2.64	0.1039	30	57			A100N37	
	2.65	0.1043	30	57			A1002.65	
	2.70	0.1063	33	61	A0022.7		A1002.7	A1012.7
36	2.71	0.1067	33	61			A100N36	

[2] 2支一包 / Duas por embalagem / 2 por blíster / Sold in packs of 2

DORMER

d_1 $Øh_8$ "/Nr./letter	d_1 $Øh_8$ mm	d_1 decimal Inch	l_2 mm	l_1 mm	A002	A002S	A100	A101
	2.75	0.1083	33	61			A1002.75	
7/64	2.78	0.1094	33	61	A0027/64		A1007/64	
35	2.79	0.1098	33	61			A100N35	
	2.80	0.1102	33	61	A0022.8		A1002.8	A1012.8
34	2.82	0.1110	33	61			A100N34	
	2.85	0.1122	33	61			A1002.85	
33	2.87	0.1130	33	61			A100N33	
	2.90	0.1142	33	61	A0022.9		A1002.9	A1012.9
	2.95	0.1161	33	61			A1002.95	
32	2.95	0.1161	33	61			A100N32	
	3.00	0.1181	33	61	A0023.0	A002S3.0 [2]	A1003.0	A1013.0
31	3.05	0.1201	36	65			A100N31	
	3.10	0.1220	36	65	A0023.1		A1003.1	
	3.15	0.1240	36	65			A1003.15	
1/8	3.18	0.1252	36	65	A0021/8	A002S1/8 [2]	A1001/8	
	3.20	0.1260	36	65	A0023.2	A002S3.2 [2]	A1003.2	A1013.2
	3.25	0.1280	36	65	A0023.25		A1003.25	
30	3.26	0.1283	36	65			A100N30	
	3.30	0.1299	36	65	A0023.3	A002S3.3 [2]	A1003.3	A1013.3
	3.40	0.1339	39	70	A0023.4		A1003.4	
29	3.45	0.1358	39	70			A100N29	
	3.50	0.1378	39	70	A0023.5	A002S3.5 [2]	A1003.5	A1013.5
28	3.57	0.1406	39	70			A100N28	
9/64	3.57	0.1406	39	70	A0029/64		A1009/64	
	3.60	0.1417	39	70	A0023.6		A1003.6	
27	3.66	0.1441	39	70			A100N27	
	3.70	0.1457	39	70	A0023.7		A1003.7	
26	3.73	0.1469	39	70			A100N26	
	3.75	0.1476	39	70			A1003.75	
	3.80	0.1496	43	75	A0023.8		A1003.8	A1013.8
25	3.80	0.1496	43	75			A100N25	
24	3.86	0.1520	43	75			A100N24	
	3.90	0.1535	43	75	A0023.9		A1003.9	
23	3.91	0.1539	43	75			A100N23	
5/32	3.97	0.1563	43	75	A0025/32	A002S5/32 [2]	A1005/32	
22	3.99	0.1571	43	75			A100N22	
	4.00	0.1575	43	75	A0024.0	A002S4.0 [2]	A1004.0	A1014.0
21	4.04	0.1591	43	75			A100N21	
20	4.09	0.1610	43	75			A100N20	
	4.10	0.1614	43	75	A0024.1	A002S4.1 [2]	A1004.1	
	4.20	0.1654	43	75	A0024.2	A002S4.2 [2]	A1004.2	A1014.2
19	4.22	0.1661	43	75			A100N19	
	4.25	0.1673	43	75			A1004.25	
	4.30	0.1693	47	80	A0024.3		A1004.3	
18	4.31	0.1697	47	80			A100N18	
11/64	4.37	0.1720	47	80	A00211/64		A10011/64	
17	4.39	0.1728	47	80			A100N17	
	4.40	0.1732	47	80	A0024.4		A1004.4	
	4.50	0.1772	47	80	A0024.5	A002S4.5 [2]	A1004.5	A1014.5
16	4.50	0.1772	47	80			A100N16	
15	4.57	0.1799	47	80			A100N15	
	4.60	0.1811	47	80	A0024.6		A1004.6	
14	4.62	0.1819	47	80			A100N14	
	4.70	0.1850	47	80	A0024.7		A1004.7	
13	4.70	0.1850	47	80			A100N13	
	4.75	0.1870	47	80			A1004.75	
3/16	4.76	0.1874	52	86	A0023/16	A002S3/16 [2]	A1003/16	
	4.80	0.1890	52	86	A0024.8		A1004.8	A1014.8
12	4.80	0.1890	52	86			A100N12	
11	4.85	0.1909	52	86			A100N11	
	4.90	0.1929	52	86	A0024.9		A1004.9	
10	4.92	0.1937	52	86			A100N10	
9	4.98	0.1961	52	86			A100N9	
	5.00	0.1969	52	86	A0025.0	A002S5.0 [2]	A1005.0	A1015.0
8	5.06	0.1992	52	86			A100N8	
	5.10	0.2008	52	86	A0025.1		A1005.1	A1015.1
7	5.11	0.2012	52	86			A100N7	
13/64	5.16	0.2031	52	86	A00213/64	A002S13/64	A10013/64	

[2] 2支一包 / Duas por embalagem / 2 por blíster / Sold in packs of 2

d_1 $Øh_8$ "/Nr./letter	d_1 $Øh_8$ mm	d_1 decimal Inch	l_2 mm	l_1 mm	A002	A002S	A100	A101
6	5.18	0.2039	52	86			A100N6	
	5.20	0.2047	52	86	A0025.2		A1005.2	A1015.2
5	5.22	0.2055	52	86			A100N5	
	5.25	0.2067	52	86			A1005.25	
	5.30	0.2087	52	86	A0025.3		A1005.3	
4	5.31	0.2091	57	93			A100N4	
	5.40	0.2126	57	93	A0025.4		A1005.4	
3	5.41	0.2130	57	93			A100N3	
	5.50	0.2165	57	93	A0025.5	A002S5.5	A1005.5	A1015.5
7/32	5.56	0.2189	57	93	A0027/32	A002S7/32	A1007/32	
	5.60	0.2205	57	93	A0025.6		A1005.6	
2	5.61	0.2209	57	93			A100N2	
	5.70	0.2244	57	93	A0025.7		A1005.7	
	5.75	0.2264	57	93			A1005.75	
1	5.79	0.2280	57	93			A100N1	
	5.80	0.2283	57	93	A0025.8		A1005.8	
	5.90	0.2323	57	93	A0025.9		A1005.9	
A	5.94	0.2339	57	93			A100A	
15/64	5.95	0.2343	57	93	A00215/64		A10015/64	
	6.00	0.2362	57	93	A0026.0	A002S6.0	A1006.0	A1016.0
B	6.03	0.2374	63	101			A100B	
	6.10	0.2402	63	101	A0026.1		A1006.1	
C	6.15	0.2421	63	101			A100C	
	6.20	0.2441	63	101	A0026.2		A1006.2	
	6.25	0.2461	63	101			A1006.25	
D	6.25	0.2461	63	101			A100D	
	6.30	0.2480	63	101	A0026.3		A1006.3	
1/4	6.35	0.2500	63	101	A0021/4	A002S1/4	A1001/4	
E	6.35	0.2500	63	101			A100E	
	6.40	0.2520	63	101	A0026.4		A1006.4	
	6.50	0.2559	63	101	A0026.5	A002S6.5	A1006.5	A1016.5
F	6.53	0.2571	63	101			A100F	
	6.60	0.2598	63	101	A0026.6		A1006.6	
G	6.63	0.2610	63	101			A100G	
	6.70	0.2638	63	101	A0026.7		A1006.7	
17/64	6.75	0.2657	69	109	A00217/64	A002S17/64	A10017/64	
	6.75	0.2657	69	109			A1006.75	
H	6.76	0.2661	69	109			A100H	
	6.80	0.2677	69	109	A0026.8	A002S6.8	A1006.8	
	6.90	0.2717	69	109	A0026.9		A1006.9	
I	6.91	0.2720	69	109			A100I	
	7.00	0.2756	69	109	A0027.0	A002S7.0	A1007.0	A1017.0
J	7.04	0.2772	69	109			A100J	
	7.10	0.2795	69	109	A0027.1		A1007.1	
K	7.14	0.2811	69	109			A100K	
9/32	7.14	0.2811	69	109	A0029/32		A1009/32	
	7.20	0.2835	69	109	A0027.2		A1007.2	
	7.25	0.2854	69	109			A1007.25	
	7.30	0.2874	69	109	A0027.3		A1007.3	
L	7.37	0.2902	69	109			A100L	
	7.40	0.2913	69	109	A0027.4		A1007.4	
M	7.49	0.2949	69	109			A100M	
	7.50	0.2953	69	109	A0027.5	A002S7.5	A1007.5	A1017.5
19/64	7.54	0.2969	75	117	A00219/64		A10019/64	
	7.60	0.2992	75	117	A0027.6		A1007.6	
N	7.67	0.3020	75	117			A100N	
	7.70	0.3031	75	117	A0027.7		A1007.7	
	7.75	0.3051	75	117			A1007.75	
	7.80	0.3071	75	117	A0027.8		A1007.8	
	7.90	0.3110	75	117	A0027.9		A1007.9	
5/16	7.94	0.3126	75	117	A0025/16	A002S5/16	A1005/16	
	8.00	0.3150	75	117	A0028.0	A002S8.0	A1008.0	A1018.0
O	8.03	0.3161	75	117			A100O	
	8.10	0.3189	75	117	A0028.1		A1008.1	
	8.20	0.3228	75	117	A0028.2	A002S8.2	A1008.2	
P	8.20	0.3228	75	117			A100P	
	8.25	0.3248	75	117			A1008.25	
	8.30	0.3268	75	117	A0028.3		A1008.3	
21/64	8.33	0.3280	75	117	A00221/64		A10021/64	
	8.40	0.3307	75	117	A0028.4		A1008.4	

DORMER

d_1 Øh_8 "/Nr./letter	d_1 Øh_8 mm	d_1 decimal Inch	l_2 mm	l_1 mm	A002	A002S	A100	A101
Q	8.43	0.3319	75	117			A100Q	
	8.50	0.3346	75	117	A0028.5	A002S8.5	A1008.5	A1018.5
	8.60	0.3386	81	125	A0028.6		A1008.6	
R	8.61	0.3390	81	125			A100R	
	8.70	0.3425	81	125	A0028.7		A1008.7	
11/32	8.73	0.3437	81	125	A00211/32		A10011/32	
	8.75	0.3445	81	125			A1008.75	
	8.80	0.3465	81	125	A0028.8		A1008.8	
S	8.84	0.3480	81	125			A100S	
	8.90	0.3504	81	125	A0028.9		A1008.9	
	9.00	0.3543	81	125	A0029.0	A002S9.0	A1009.0	A1019.0
T	9.09	0.3579	81	125			A100T	
	9.10	0.3583	81	125	A0029.1		A1009.1	
23/64	9.13	0.3594	81	125	A00223/64		A10023/64	
	9.20	0.3622	81	125	A0029.2		A1009.2	
	9.25	0.3642	81	125			A1009.25	
	9.30	0.3661	81	125	A0029.3		A1009.3	
U	9.35	0.3681	81	125			A100U	
	9.40	0.3701	81	125	A0029.4		A1009.4	
	9.50	0.3740	81	125	A0029.5	A002S9.5	A1009.5	
3/8	9.52	0.3748	87	133	A0023/8	A002S3/8	A1003/8	
V	9.58	0.3772	87	133			A100V	
	9.60	0.3780	87	133	A0029.6		A1009.6	
	9.70	0.3819	87	133	A0029.7		A1009.7	
	9.75	0.3839	87	133			A1009.75	
	9.80	0.3858	87	133	A0029.8		A1009.8	
W	9.80	0.3858	87	133			A100W	
	9.90	0.3898	87	133	A0029.9		A1009.9	
25/64	9.92	0.3906	87	133	A00225/64		A10025/64	
	10.00	0.3937	87	133	A00210.0	A002S10.0	A10010.0	A10110.0
X	10.08	0.3969	87	133			A100X	
	10.10	0.3976	87	133	A00210.1		A10010.1	
	10.20	0.4016	87	133	A00210.2	A002S10.2	A10010.2	
	10.25	0.4035	87	133			A10010.25	
Y	10.26	0.4039	87	133			A100Y	
	10.30	0.4055	87	133	A00210.3		A10010.3	
13/32	10.32	0.4063	87	133	A00213/32		A10013/32	
	10.40	0.4094	87	133	A00210.4		A10010.4	
Z	10.49	0.4130	87	133			A100Z	
	10.50	0.4134	87	133	A00210.5	A002S10.5	A10010.5	
	10.60	0.4173	87	133	A00210.6		A10010.6	
	10.70	0.4213	94	142	A00210.7		A10010.7	
27/64	10.72	0.4220	94	142	A00227/64		A10027/64	
	10.75	0.4232	94	142			A10010.75	
	10.80	0.4252	94	142	A00210.8		A10010.8	
	10.90	0.4291	94	142	A00210.9		A10010.9	
	11.00	0.4331	94	142	A00211.0	A002S11.0	A10011.0	A10111.0
	11.10	0.4370	94	142	A00211.1		A10011.1	
7/16	11.11	0.4374	94	142	A0027/16		A1007/16	
	11.20	0.4409	94	142	A00211.2		A10011.2	
	11.25	0.4429	94	142			A10011.25	
	11.30	0.4449	94	142	A00211.3		A10011.3	
	11.40	0.4488	94	142	A00211.4		A10011.4	
	11.50	0.4528	94	142	A00211.5	A002S11.5	A10011.5	
29/64	11.51	0.4531	94	142	A00229/64		A10029/64	
	11.60	0.4567	94	142	A00211.6		A10011.6	
	11.70	0.4606	94	142	A00211.7		A10011.7	
	11.75	0.4626	94	142			A10011.75	
	11.80	0.4646	94	142	A00211.8		A10011.8	
	11.90	0.4685	101	151	A00211.9		A10011.9	
15/32	11.91	0.4689	101	151	A00215/32		A10015/32	
	12.00	0.4724	101	151	A00212.0	A002S12.0	A10012.0	A10112.0
	12.10	0.4764	101	151	A00212.1		A10012.1	
	12.20	0.4803	101	151	A00212.2		A10012.2	
	12.25	0.4823	101	151			A10012.25	
	12.30	0.4843	101	151	A00212.3		A10012.3	
31/64	12.30	0.4843	101	151	A00231/64		A10031/64	
	12.40	0.4882	101	151	A00212.4		A10012.4	
	12.50	0.4921	101	151	A00212.5	A002S12.5	A10012.5	
	12.60	0.4961	101	151	A00212.6		A10012.6	

d_1 Øh_8 "/Nr./letter	d_1 Øh_8 mm	d_1 decimal Inch	l_2 mm	l_1 mm	A002	A002S	A100	A101
	12.70	0.5000	101	151	A00212.7		A10012.7	
1/2	12.70	0.5000	101	151	A0021/2	A002S1/2	A1001/2	
	12.75	0.5020	101	151			A10012.75	
	12.80	0.5039	101	151	A00212.8		A10012.8	
	12.90	0.5079	101	151	A00212.9		A10012.9	
	13.00	0.5118	101	151	A00213.0	A002S13.0	A10013.0	
33/64	13.10	0.5157	101	151	A00233/64		A10033/64	
	13.10	0.5157	101	151	A00213.1		A10013.1	
	13.20	0.5197	101	151	A00213.2		A10013.2	
	13.25	0.5217	108	160	A00213.25		A10013.25	
	13.30	0.5236	108	160	A00213.3		A10013.3	
	13.40	0.5276	108	160	A00213.4		A10013.4	
17/32	13.49	0.5311	108	160	A00217/32		A10017/32	
	13.50	0.5315	108	160	A00213.5		A10013.5	
	13.60	0.5354	108	160	A00213.6		A10013.6	
	13.70	0.5394	108	160	A00213.7		A10013.7	
	13.75	0.5413	108	160	A00213.75		A10013.75	
	13.80	0.5433	108	160	A00213.8		A10013.8	
35/64	13.89	0.5469	108	160	A00235/64		A10035/64	
	13.90	0.5472	108	160	A00213.9		A10013.9	
	14.00	0.5512	108	160	A00214.0		A10014.0	
	14.25	0.5610	114	169	A00214.25		A10014.25	
9/16	14.29	0.5626	114	169	A0029/16		A1009/16	
	14.50	0.5709	114	169	A00214.5		A10014.5	
37/64	14.68	0.5780	114	169	A00237/64		A10037/64	
	14.75	0.5807	114	169	A00214.75		A10014.75	
	15.00	0.5906	114	169	A00215.0		A10015.0	
19/32	15.08	0.5937	120	178	A00219/32		A10019/32	
	15.25	0.6004	120	178	A00215.25		A10015.25	
39/64	15.48	0.6094	120	178	A00239/64		A10039/64	
	15.50	0.6102	120	178	A00215.5		A10015.5	
	15.75	0.6201	120	178	A00215.75		A10015.75	
5/8	15.88	0.6252	120	178	A0025/8		A1005/8	
	16.00	0.6299	120	178	A00216.0		A10016.0	
41/64	16.27	0.6406	125	184			A10041/64	
	16.50	0.6496	125	184			A10016.5	
21/32	16.67	0.6563	125	184			A10021/32	
	17.00	0.6693	125	184			A10017.0	
43/64	17.07	0.6720	130	191			A10043/64	
11/16	17.46	0.6874	130	191			A10011/16	
	17.50	0.6890	130	191			A10017.5	
	18.00	0.7087	130	191			A10018.0	
	18.50	0.7283	135	198			A10018.5	
	19.00	0.7480	135	198			A10019.0	
	19.50	0.7677	140	205			A10019.5	
	20.00	0.7874	140	205			A10020.0	

DORMER

A108

- 普通长度钻头 分离式钻尖
- Broca Série Curta Afiação em Cruz
- Broca , serie corta Punta afilada
- Jobber Drill Split Point

1.6 mm, 1/16” 及以上为分离式钻尖
Afiação em cruz 1,6mm, 1/16” e acima
Afilado en cruz desde1,6mm,1/16”
Split Point 1.6mm, 1/16” and above

A147

- 普通长度钻头
- Broca Série Curta
- Broca , serie corta
- Jobber Drill

A777

- 普通长度钻头 分离式钻尖
- Broca Série Curta
- Broca , serie corta Punta afilada
- Jobber Drill Split Point

不大于 1.4 mm 为 4 后面钻尖
Ponta 4 faces até 1,4mm
Punta de 4 caras hasta 1,4 mm
4 Facet Point up to 1.4mm.

A108	▪	2.2 2.3 4.1 4.2
	•	1.1 1.2 1.3 1.4 1.5 1.6 2.1 3.1 3.2 3.3 3.4 4.3 5.1 5.2 5.3 6.1 6.2 6.3 6.4 7.1 7.2 7.3 7.4 8.1 8.2 8.3 9.1
A147	▪	2.1 2.2 2.3 4.1 4.2 5.1
	•	1.1 1.2 1.3 1.4 1.5 1.6 2.4 3.1 3.2 3.3 3.4 4.3 5.2 5.3 6.1 6.2 6.3 6.4 7.1 7.2 7.3 7.4 8.1 8.2 8.3 9.1
A777	▪	1.5 1.6 3.4 4.1 4.2 4.3 5.2
	•	1.1 1.2 1.3 1.4 2.1 2.2 2.3 3.1 3.2 3.3 5.1 5.3 6.1 6.2 6.3 6.4 7.1 7.2 7.3 7.4 9.1

A108	HSS	DIN 338	4XD	135°	ST		W			A188 134	L114 334
A147	HSS-E	DIN 338	4XD	130°			VA				
A777	HSS-E	DIN 338	4XD	135°	Bronze		N		NAS 907J	A295 135	

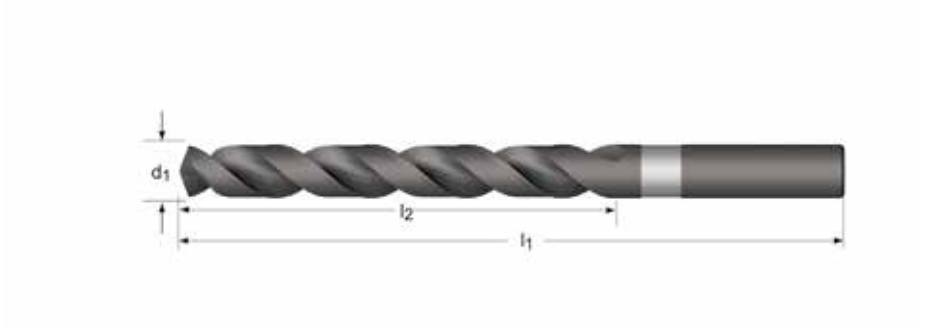

A108	A147	A777
	NEW 	
1.00 - 16.00	0.30 - 15.0	0.30 - 16.00

d_1 Øh_8 Inch	d_1 Øh_8 mm	d_1 decimal Inch	l_2 mm	l_1 mm	A108	A147	A777
	0.30	0.0118	3	19		A147.3	A777.3
	0.35	0.0138	4	19			A777.35
	0.40	0.0157	5	20		A147.4	A777.4
	0.45	0.0177	5	20			A777.45
	0.50	0.0197	6	22		A147.5	A777.5
	0.55	0.0217	7	24			A777.55

d_1 Øh_8 Inch	d_1 Øh_8 mm	d_1 decimal Inch	l_2 mm	l_1 mm	A108	A147	A777
	0.60	0.0236	7	24		A147.6	A777.6
	0.65	0.0256	8	26			A777.65
	0.70	0.0276	9	28		A147.7	A777.7
	0.80	0.0315	10	30		A147.8	A777.8
	0.90	0.0354	11	32		A147.9	A777.9
	0.95	0.0374	11	32			A777.95
	1.00	0.0394	12	34	A1081.0	A1471.0	A7771.0
	1.10	0.0433	14	36	A1081.1	A1471.1	A7771.1
	1.20	0.0472	16	38	A1081.2	A1471.2	A7771.2
	1.30	0.0512	16	38	A1081.3	A1471.3	A7771.3
	1.40	0.0551	18	40	A1081.4	A1471.4	A7771.4
	1.50	0.0591	18	40	A1081.5	A1471.5	A7771.5
1/16	1.59	0.0626	20	43	A1081/16	A1471/16	A7771/16
	1.60	0.0630	20	43	A1081.6	A1471.6	A7771.6
	1.70	0.0669	20	43	A1081.7	A1471.7	A7771.7
	1.80	0.0709	22	46	A1081.8	A1471.8	A7771.8
	1.90	0.0748	22	46	A1081.9	A1471.9	A7771.9
5/64	1.98	0.0780	24	49	A1085/64		A7775/64
	2.00	0.0787	24	49	A1082.0	A1472.0	A7772.0
	2.10	0.0827	24	49	A1082.1	A1472.1	A7772.1
	2.20	0.0866	27	53	A1082.2	A1472.2	A7772.2
	2.30	0.0906	27	53	A1082.3	A1472.3	A7772.3
3/32	2.38	0.0937	30	57	A1083/32	A1473/32	A7773/32
	2.40	0.0945	30	57	A1082.4	A1472.4	A7772.4
	2.50	0.0984	30	57	A1082.5	A1472.5	A7772.5
	2.60	0.1024	30	57	A1082.6	A1472.6	A7772.6
	2.70	0.1063	33	61	A1082.7	A1472.7	A7772.7
7/64	2.78	0.1094	33	61	A1087/64		A7777/64
	2.80	0.1102	33	61	A1082.8	A1472.8	A7772.8
	2.90	0.1142	33	61	A1082.9	A1472.9	A7772.9
	3.00	0.1181	33	61	A1083.0	A1473.0	A7773.0
	3.10	0.1220	36	65	A1083.1	A1473.1	A7773.1
1/8	3.18	0.1252	36	65	A1081/8	A1471/8	A7771/8
	3.20	0.1260	36	65	A1083.2	A1473.2	A7773.2
	3.30	0.1299	36	65	A1083.3	A1473.3	A7773.3
	3.40	0.1339	39	70	A1083.4	A1473.4	A7773.4
	3.50	0.1378	39	70	A1083.5	A1473.5	A7773.5
9/64	3.57	0.1406	39	70	A1089/64		A7779/64
	3.60	0.1417	39	70	A1083.6	A1473.6	A7773.6
	3.70	0.1457	39	70	A1083.7	A1473.7	A7773.7
	3.80	0.1496	43	75	A1083.8	A1473.8	A7773.8
	3.90	0.1535	43	75	A1083.9	A1473.9	A7773.9
5/32	3.97	0.1563	43	75	A1085/32	A1475/32	A7775/32
	4.00	0.1575	43	75	A1084.0	A1474.0	A7774.0
	4.10	0.1614	43	75	A1084.1	A1474.1	A7774.1
	4.20	0.1654	43	75	A1084.2	A1474.2	A7774.2
	4.30	0.1693	47	80	A1084.3	A1474.3	A7774.3
11/64	4.37	0.1720	47	80	A10811/64		A77711/64
	4.40	0.1732	47	80	A1084.4	A1474.4	A7774.4
	4.50	0.1772	47	80	A1084.5	A1474.5	A7774.5
	4.60	0.1811	47	80	A1084.6	A1474.6	A7774.6
	4.70	0.1850	47	80	A1084.7	A1474.7	A7774.7
3/16	4.76	0.1874	52	86	A1083/16	A1473/16	A7773/16
	4.80	0.1890	52	86	A1084.8	A1474.8	A7774.8
	4.90	0.1929	52	86	A1084.9	A1474.9	A7774.9
N10	4.92	0.1935	52	86	A108N10		
	5.00	0.1969	52	86	A1085.0	A1475.0	A7775.0
	5.10	0.2008	52	86	A1085.1	A1475.1	A7775.1
13/64	5.16	0.2031	52	86	A10813/64		A77713/64
	5.20	0.2047	52	86	A1085.2	A1475.2	A7775.2
	5.30	0.2087	52	86	A1085.3	A1475.3	A7775.3
	5.40	0.2126	57	93	A1085.4	A1475.4	A7775.4
	5.50	0.2165	57	93	A1085.5	A1475.5	A7775.5
7/32	5.56	0.2189	57	93	A1087/32		A7777/32
	5.60	0.2205	57	93	A1085.6	A1475.6	A7775.6
	5.70	0.2244	57	93	A1085.7	A1475.7	A7775.7
	5.80	0.2283	57	93	A1085.8	A1475.8	A7775.8
	5.90	0.2323	57	93	A1085.9	A1475.9	A7775.9
15/64	5.95	0.2343	57	93	A10815/64		A77715/64
	6.00	0.2362	57	93	A1086.0	A1476.0	A7776.0

DORMER

d_1 Øh_8 Inch	d_1 Øh_8 mm	d_1 decimal Inch	l_2 mm	l_1 mm	A108	A147	A777
	6.10	0.2402	63	101	A1086.1	A1476.1	A7776.1
	6.20	0.2441	63	101	A1086.2	A1476.2	A7776.2
	6.30	0.2480	63	101	A1086.3	A1476.3	A7776.3
1/4	6.35	0.2500	63	101	A1081/4	A1471/4	A7771/4
	6.40	0.2520	63	101	A1086.4	A1476.4	A7776.4
	6.50	0.2559	63	101	A1086.5	A1476.5	A7776.5
	6.60	0.2598	63	101	A1086.6	A1476.6	A7776.6
	6.70	0.2638	63	101	A1086.7	A1476.7	A7776.7
17/64	6.75	0.2657	69	109	A10817/64		A77717/64
	6.80	0.2677	69	109	A1086.8	A1476.8	A7776.8
	6.90	0.2717	69	109	A1086.9	A1476.9	A7776.9
	7.00	0.2756	69	109	A1087.0	A1477.0	A7777.0
	7.10	0.2795	69	109	A1087.1	A1477.1	A7777.1
9/32	7.14	0.2811	69	109	A1089/32		A7779/32
	7.20	0.2835	69	109	A1087.2	A1477.2	A7777.2
	7.30	0.2874	69	109	A1087.3	A1477.3	A7777.3
	7.40	0.2913	69	109	A1087.4	A1477.4	A7777.4
	7.50	0.2953	69	109	A1087.5	A1477.5	A7777.5
19/64	7.54	0.2969	75	117	A10819/64		A77719/64
	7.60	0.2992	75	117	A1087.6	A1477.6	A7777.6
	7.70	0.3031	75	117	A1087.7	A1477.7	A7777.7
	7.80	0.3071	75	117	A1087.8	A1477.8	A7777.8
	7.90	0.3110	75	117	A1087.9	A1477.9	A7777.9
5/16	7.94	0.3126	75	117	A1085/16		A7775/16
	8.00	0.3150	75	117	A1088.0	A1478.0	A7778.0
	8.10	0.3189	75	117	A1088.1	A1478.1	A7778.1
	8.20	0.3228	75	117	A1088.2	A1478.2	A7778.2
	8.30	0.3268	75	117	A1088.3	A1478.3	A7778.3
21/64	8.33	0.3280	75	117	A10821/64		A77721/64
	8.40	0.3307	75	117	A1088.4	A1478.4	A7778.4
	8.50	0.3346	75	117	A1088.5	A1478.5	A7778.5
	8.60	0.3386	81	125	A1088.6	A1478.6	A7778.6
	8.70	0.3425	81	125	A1088.7	A1478.7	A7778.7
11/32	8.73	0.3437	81	125	A10811/32		A77711/32
	8.80	0.3465	81	125	A1088.8	A1478.8	A7778.8
	8.90	0.3504	81	125	A1088.9	A1478.9	A7778.9
	9.00	0.3543	81	125	A1089.0	A1479.0	A7779.0
	9.10	0.3583	81	125	A1089.1	A1479.1	A7779.1
23/64	9.13	0.3594	81	125	A10823/64		A77723/64
	9.20	0.3622	81	125	A1089.2	A1479.2	A7779.2
	9.30	0.3661	81	125	A1089.3	A1479.3	A7779.3
	9.40	0.3701	81	125	A1089.4	A1479.4	A7779.4
	9.50	0.3740	81	125	A1089.5	A1479.5	A7779.5
3/8	9.52	0.3748	87	133	A1083/8		A7773/8
	9.60	0.3780	87	133	A1089.6	A1479.6	A7779.6
	9.70	0.3819	87	133	A1089.7	A1479.7	A7779.7
	9.80	0.3858	87	133	A1089.8	A1479.8	A7779.8
	9.90	0.3898	87	133	A1089.9	A1479.9	A7779.9
25/64	9.92	0.3906	87	133	A10825/64		A77725/64
	10.00	0.3937	87	133	A10810.0	A14710.0	A77710.0
	10.10	0.3976	87	133			A77710.1
	10.20	0.4016	87	133	A10810.2	A14710.2	A77710.2
13/32	10.32	0.4063	87	133	A10813/32		A77713/32
	10.50	0.4134	87	133	A10810.5	A14710.5	A77710.5
27/64	10.72	0.4220	94	142	A10827/64		A77727/64
	10.80	0.4252	94	142	A10810.8		A77710.8
	11.00	0.4331	94	142	A10811.0	A14711.0	A77711.0
7/16	11.11	0.4374	94	142	A1087/16		A7777/16
	11.20	0.4409	94	142		A14711.2	A77711.2
	11.50	0.4528	94	142	A10811.5	A14711.5	A77711.5
29/64	11.51	0.4531	94	142	A10829/64		A77729/64
	11.80	0.4646	94	142	A10811.8		A77711.8
15/32	11.91	0.4689	101	151	A10815/32		A77715/32
	12.00	0.4724	101	151	A10812.0	A14712.0	A77712.0
	12.20	0.4803	101	151	A10812.2		A77712.2
31/64	12.30	0.4843	101	151	A10831/64		A77731/64
	12.50	0.4921	101	151	A10812.5	A14712.5	A77712.5
1/2	12.70	0.5000	101	151	A1081/2		A7771/2
	12.80	0.5039	101	151	A10812.8		A77712.8
	12.90	0.5079	101	151	A10812.9		

d_1 Øh_8 Inch	d_1 Øh_8 mm	d_1 decimal Inch	l_2 mm	l_1 mm	A108	A147	A777
	13.00	0.5118	101	151	A10813.0	A14713.0	A77713.0
	13.50	0.5315	108	160	A10813.5	A14713.5	A77713.5
	14.00	0.5512	108	160	A10814.0	A14714.0	A77714.0
	14.50	0.5709	114	169	A10814.5	A14714.5	A77714.5
	15.00	0.5906	114	169	A10815.0	A14715.0	A77715.0
	15.25	0.6004	120	178	A10815.25		
	15.50	0.6102	120	178	A10815.5		A77715.5
	16.00	0.6299	120	178	A10816.0		A77716.0

DORMER

A170

- 1/2 英寸缩径柄钻头
- Brocas cilindricas, haste reduzida 1/2”
- Brocas de mango cilindrico, Mango rebajado 1/2”
- 1/2” Reduced Parallel Shank Drill

A170 • 1.1 1.2 1.3 1.4 1.5 1.6 2.1 2.2 2.3 3.1 3.2 3.3 3.4 4.1 4.2 4.3 5.1 5.2 5.3 6.1 6.2 6.3 6.4 7.1 7.2 7.3 7.4 8.1 8.2 8.3 9.1

A170 HSS DORMER 4XD 118° ST N

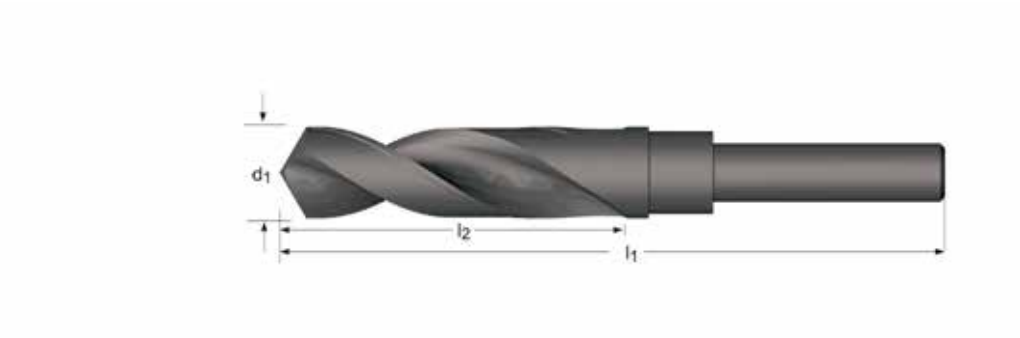

A170

13.00 - 1.1/2

d_1 Øh_8 Inch	d_1 Øh_8 mm	d_1 decimal Inch	l_2 Inch	l_1 Inch	l_2 mm	l_1 mm	A170
	13.00	0.5118			83	156	A17013.0
33/64	13.10	0.5157	3.1/8	6“			A17033/64
17/32	13.49	0.5311	3.1/8	6“			A17017/32
	13.50	0.5315			83	156	A17013.5
35/64	13.89	0.5469	3.1/8	6“			A17035/64
	14.00	0.5512			83	156	A17014.0
9/16	14.29	0.5626	3.1/8	6“			A1709/16
	14.50	0.5709			83	156	A17014.5
37/64	14.68	0.5780	3.1/8	6“			A17037/64
	15.00	0.5906			83	156	A17015.0
19/32	15.08	0.5937	3.1/8	6“			A17019/32
39/64	15.48	0.6094	3.1/8	6“			A17039/64
	15.50	0.6102			83	156	A17015.5
5/8	15.88	0.6252	3.1/8	6“			A1705/8
	16.00	0.6299			84	157	A17016.0
41/64	16.27	0.6406	3.1/8	6“			A17041/64
	16.50	0.6496			84	157	A17016.5
21/32	16.67	0.6563	3.1/8	6“			A17021/32
	17.00	0.6693			84	157	A17017.0
43/64	17.07	0.6720	3.1/8	6“			A17043/64
11/16	17.46	0.6874	3.1/8	6“			A17011/16
	17.50	0.6890			84	157	A17017.5
45/64	17.86	0.7031	3.1/8	6“			A17045/64
	18.00	0.7087			84	157	A17018.0
23/32	18.26	0.7189	3.1/8	6“			A17023/32
	18.50	0.7283			84	157	A17018.5
47/64	18.65	0.7343	3.1/8	6“			A17047/64
	19.00	0.7480			84	157	A17019.0
3/4	19.05	0.7500	3.1/8	6“			A1703/4
49/64	19.45	0.7657	3“	6“			A17049/64
	19.50	0.7677			81	158	A17019.5
25/32	19.84	0.7811	3“	6“			A17025/32
	20.00	0.7874			81	158	A17020.0
51/64	20.24	0.7969	3“	6“			A17051/64
13/16	20.64	0.8126	3“	6“			A17013/16
	21.00	0.8268			82	158	A17021.0
53/64	21.03	0.8280	3“	6“			A17053/64
27/32	21.43	0.8437	3“	6“			A17027/32

d_1 Øh_8 Inch	d_1 Øh_8 mm	d_1 decimal Inch	l_2 Inch	l_1 Inch	l_2 mm	l_1 mm	A170
55/64	21.83	0.8594	3“	6“			A17055/64
	22.00	0.8661			82	158	A17022.0
7/8	22.22	0.8748	3“	6“			A1707/8
57/64	22.62	0.8906	3“	6“			A17057/64
	23.00	0.9055			82	158	A17023.0
29/32	23.02	0.9063	3“	6“			A17029/32
59/64	23.42	0.9220	3“	6“			A17059/64
15/16	23.81	0.9374	3“	6“			A17015/16
	24.00	0.9449			83	159	A17024.0
61/64	24.21	0.9531	3“	6“			A17061/64
31/32	24.61	0.9689	3“	6“			A17031/32
	25.00	0.9843			83	159	A17025.0
63/64	25.00	0.9843	3“	6“			A17063/64
1“	25.40	1.0000	3“	6“			A1701
1.1/32	26.19	1.0311	3“	6“			A1701.1/32
1.1/16	26.99	1.0626	3“	6“			A1701.1/16
1.7/64	28.18	1.1094	3“	6“			A1701.7/64
1.1/8	28.58	1.1252	3“	6“			A1701.1/8
1.9/64	28.97	1.1406	3“	6“			A1701.9/64
1.5/32	29.37	1.1563	3“	6“			A1701.5/32
1.3/16	30.16	1.1874	3“	6“			A1701.3/16
1.7/32	30.96	1.2189	3“	6“			A1701.7/32
1.1/4	31.75	1.2500	3“	6“			A1701.1/4
1.5/16	33.34	1.3126	3“	6“			A1701.5/16
1.3/8	34.93	1.3752	3“	6“			A1701.3/8
1.7/16	36.51	1.4374	3“	6“			A1701.7/16
1.1/2	38.10	1.5000	3“	6“			A1701.1/2

A160

- 四后面型钻尖的焊接硬质合金式普通钻头
- Broca Série Curta
- Broca serie corta 4 caras con punta soldada de metal duro
- Jobber Drill with 4 facet ground Brazed Carbide Tip

A160

▪ 3.1 3.2 3.3 3.4

• 1.1 1.2 1.3 1.4 1.5 1.6 2.1 2.2 2.3 4.1 4.2 4.3 5.1 5.2 5.3 6.1 6.2 6.3 6.4 7.1 7.2 7.3 7.4 8.2 9.1

A160 HSS HM | DIN 338 | 4XD | 118° | ST | N

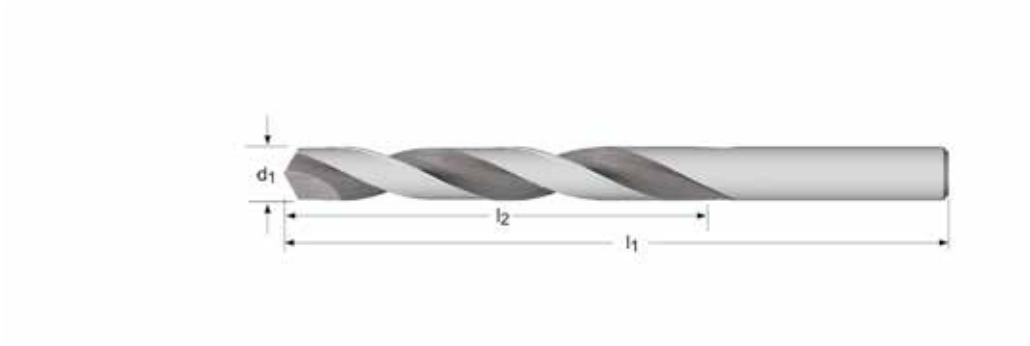

A160

4.00 - 16.00

d_1 Øh_8 mm	d_1 decimal Inch	l_2 mm	l_1 mm	A160
4.00	0.1575	43	75	A1604.0
4.50	0.1772	47	80	A1604.5
5.00	0.1969	52	86	A1605.0
5.50	0.2165	57	93	A1605.5
6.00	0.2362	57	93	A1606.0
6.50	0.2559	63	101	A1606.5
6.80	0.2677	69	109	A1606.8
7.00	0.2756	69	109	A1607.0
7.50	0.2953	69	109	A1607.5
8.00	0.3150	75	117	A1608.0
8.50	0.3346	75	117	A1608.5
9.00	0.3543	81	125	A1609.0
9.50	0.3740	81	125	A1609.5
10.00	0.3937	87	133	A16010.0
10.20	0.4016	87	133	A16010.2
10.50	0.4134	87	133	A16010.5
11.00	0.4331	94	142	A16011.0
11.50	0.4528	94	142	A16011.5
12.00	0.4724	101	151	A16012.0
13.00	0.5118	101	151	A16013.0
14.00	0.5512	108	160	A16014.0
15.00	0.5906	114	169	A16015.0
16.00	0.6299	120	178	A16016.0

A510

- ADX 普通长度钻头
- Broca ADX Série Normal
- Broca ADX , serie corta
- ADX Jobber Drill

A510																				
▪	1.1	1.2	1.3	1.4	1.5	2.1	2.2	3.1	3.2	3.3	3.4	6.2	6.3	7.2	7.3	7.4	8.1	8.2	8.3
•	1.6	2.3	4.1	4.2	4.3	5.1	5.2	5.3	6.1	6.4	7.1								

A510 HSS DIN 338 4XD 130° TiN

A510

ADX

3.00 - 14.00

d_1 Øh8 Inch	d_1 Øh8 mm	d_1 decimal Inch	l_2 mm	l_1 mm	A510
	3.00	0.1181	33	61	A5103.0
	3.10	0.1220	36	65	A5103.1
1/8	3.18	0.1252	36	65	A5101/8
	3.20	0.1260	36	65	A5103.2
	3.30	0.1299	36	65	A5103.3
	3.40	0.1339	39	70	A5103.4
	3.50	0.1378	39	70	A5103.5
9/64	3.57	0.1406	39	70	A5109/64
	3.60	0.1417	39	70	A5103.6
	3.70	0.1457	39	70	A5103.7
	3.80	0.1496	43	75	A5103.8
	3.90	0.1535	43	75	A5103.9
5/32	3.97	0.1563	43	75	A5105/32
	4.00	0.1575	43	75	A5104.0
	4.10	0.1614	43	75	A5104.1
	4.20	0.1654	43	75	A5104.2
	4.30	0.1693	47	80	A5104.3
11/64	4.37	0.1720	47	80	A51011/64
	4.40	0.1732	47	80	A5104.4
	4.50	0.1772	47	80	A5104.5
	4.60	0.1811	47	80	A5104.6
	4.70	0.1850	47	80	A5104.7
3/16	4.76	0.1874	52	86	A5103/16
	4.80	0.1890	52	86	A5104.8
	4.90	0.1929	52	86	A5104.9
	5.00	0.1969	52	86	A5105.0
	5.10	0.2008	52	86	A5105.1
13/64	5.16	0.2031	52	86	A51013/64
	5.20	0.2047	52	86	A5105.2
	5.30	0.2087	52	86	A5105.3
	5.40	0.2126	57	93	A5105.4
	5.50	0.2165	57	93	A5105.5
7/32	5.56	0.2189	57	93	A5107/32
	5.60	0.2205	57	93	A5105.6
	5.70	0.2244	57	93	A5105.7
	5.80	0.2283	57	93	A5105.8

d_1 Øh_8 Inch	d_1 Øh_8 mm	d_1 decimal Inch	l_2 mm	l_1 mm	A510
	5.90	0.2323	57	93	A5105.9
15/64	5.95	0.2343	57	93	A51015/64
	6.00	0.2362	57	93	A5106.0
	6.10	0.2402	63	101	A5106.1
	6.20	0.2441	63	101	A5106.2
	6.30	0.2480	63	101	A5106.3
1/4	6.35	0.2500	63	101	A5101/4
	6.40	0.2520	63	101	A5106.4
	6.50	0.2559	63	101	A5106.5
	6.60	0.2598	63	101	A5106.6
	6.70	0.2638	63	101	A5106.7
17/64	6.75	0.2657	69	109	A51017/64
	6.80	0.2677	69	109	A5106.8
	6.90	0.2717	69	109	A5106.9
	7.00	0.2756	69	109	A5107.0
	7.10	0.2795	69	109	A5107.1
9/32	7.14	0.2811	69	109	A5109/32
	7.20	0.2835	69	109	A5107.2
	7.30	0.2874	69	109	A5107.3
	7.40	0.2913	69	109	A5107.4
	7.50	0.2953	69	109	A5107.5
19/64	7.54	0.2969	75	117	A51019/64
	7.60	0.2992	75	117	A5107.6
	7.70	0.3031	75	117	A5107.7
	7.80	0.3071	75	117	A5107.8
	7.90	0.3110	75	117	A5107.9
5/16	7.94	0.3126	75	117	A5105/16
	8.00	0.3150	75	117	A5108.0
	8.10	0.3189	75	117	A5108.1
	8.20	0.3228	75	117	A5108.2
	8.30	0.3268	75	117	A5108.3
21/64	8.33	0.3280	75	117	A51021/64
	8.40	0.3307	75	117	A5108.4
	8.50	0.3346	75	117	A5108.5
	8.60	0.3386	81	125	A5108.6
	8.70	0.3425	81	125	A5108.7
11/32	8.73	0.3437	81	125	A51011/32
	8.80	0.3465	81	125	A5108.8
	8.90	0.3504	81	125	A5108.9
	9.00	0.3543	81	125	A5109.0
	9.10	0.3583	81	125	A5109.1
23/64	9.13	0.3594	81	125	A51023/64
	9.20	0.3622	81	125	A5109.2
	9.30	0.3661	81	125	A5109.3
	9.40	0.3701	81	125	A5109.4
	9.50	0.3740	81	125	A5109.5
3/8	9.52	0.3748	87	133	A5103/8
	9.60	0.3780	87	133	A5109.6
	9.70	0.3819	87	133	A5109.7
	9.80	0.3858	87	133	A5109.8
	9.90	0.3898	87	133	A5109.9
25/64	9.92	0.3906	87	133	A51025/64
	10.00	0.3937	87	133	A51010.0
	10.10	0.3976	87	133	A51010.1
	10.20	0.4016	87	133	A51010.2
	10.30	0.4055	87	133	A51010.3
13/32	10.32	0.4063	87	133	A51013/32
	10.40	0.4094	87	133	A51010.4
	10.50	0.4134	87	133	A51010.5
	10.60	0.4173	87	133	A51010.6
	10.70	0.4213	94	142	A51010.7
27/64	10.72	0.4220	94	142	A51027/64
	10.80	0.4252	94	142	A51010.8
	10.90	0.4291	94	142	A51010.9
	11.00	0.4331	94	142	A51011.0
	11.10	0.4370	94	142	A51011.1
7/16	11.11	0.4374	94	142	A5107/16
	11.20	0.4409	94	142	A51011.2
	11.30	0.4449	94	142	A51011.3
	11.40	0.4488	94	142	A51011.4

d_1 Øh_8 Inch	d_1 Øh_8 mm	d_1 decimal Inch	l_2 mm	l_1 mm	A510
	11.50	0.4528	94	142	A51011.5
29/64	11.51	0.4531	94	142	A51029/64
	11.60	0.4567	94	142	A51011.6
	11.70	0.4606	94	142	A51011.7
	11.80	0.4646	94	142	A51011.8
	11.90	0.4685	101	151	A51011.9
15/32	11.91	0.4689	101	151	A51015/32
	12.00	0.4724	101	151	A51012.0
	12.10	0.4764	101	151	A51012.1
	12.20	0.4803	101	151	A51012.2
	12.30	0.4843	101	151	A51012.3
31/64	12.30	0.4843	101	151	A51031/64
	12.40	0.4882	101	151	A51012.4
	12.50	0.4921	101	151	A51012.5
	12.60	0.4961	101	151	A51012.6
	12.70	0.5000	101	151	A51012.7
1/2	12.70	0.5000	101	151	A5101/2
	12.80	0.5039	101	151	A51012.8
	12.90	0.5079	101	151	A51012.9
	13.00	0.5118	101	151	A51013.0
	14.00	0.5512	108	160	A51014.0

DORMER

A553

- ADX 钻头 内冷
- Broca ADX com refrigeração interna
- Broca ADX - refrigeración interna
- ADX Drill Oil Feed

A553																				
■	1.1	1.2	1.3	1.4	1.5	1.6	2.1	2.2	3.1	3.2	3.3	3.4	4.1	6.2	6.3	7.2	7.3	7.4	8.1
•	2.3	4.2	4.3	5.1	5.2	5.3	6.1	6.4	7.1										

A553 HSS-E DORMER 5XD 130° TiAlN Top DIN 6535HA

A553

ADX

5.00 - 20.00

d_1 Øh_8 mm	d_1 decimal Inch	l_2 mm	l_1 mm	l_3 mm	d_2 Øh_6 mm	A553
5.00	0.1969	36	79	36	6	A5535.0
5.20	0.2047	38	79	36	6	A5535.2
5.50	0.2165	40	79	36	6	A5535.5
6.00	0.2362	43	79	36	6	A5536.0
6.30	0.2480	46	87	36	8	A5536.3
6.50	0.2559	47	87	36	8	A5536.5
6.80	0.2677	48	87	36	8	A5536.8
6.90	0.2717	48	87	36	8	A5536.9
7.00	0.2756	48	87	36	8	A5537.0
7.40	0.2913	54	94	36	8	A5537.4
7.50	0.2953	54	94	36	8	A5537.5
8.00	0.3150	58	94	36	8	A5538.0
8.50	0.3346	75	130	40	10	A5538.5
8.70	0.3425	75	130	40	10	A5538.7
9.00	0.3543	75	130	40	10	A5539.0
9.50	0.3740	75	130	40	10	A5539.5
10.00	0.3937	75	130	40	10	A55310.0
10.20	0.4016	87	150	45	12	A55310.2
10.30	0.4055	87	150	45	12	A55310.3
10.50	0.4134	87	150	45	12	A55310.5
11.00	0.4331	94	150	45	12	A55311.0
11.30	0.4449	94	150	45	12	A55311.3
11.50	0.4528	94	150	45	12	A55311.5
12.00	0.4724	94	150	45	12	A55312.0
12.50	0.4921	101	160	45	14	A55312.5
13.00	0.5118	101	160	45	14	A55313.0
13.50	0.5315	101	160	45	14	A55313.5
14.00	0.5512	101	160	45	14	A55314.0
14.25	0.5610	108	170	48	16	A55314.25
14.50	0.5709	108	170	48	16	A55314.5
15.00	0.5906	108	170	48	16	A55315.0
15.25	0.6004	108	170	48	16	A55315.25
15.50	0.6102	108	170	48	16	A55315.5
16.00	0.6299	108	170	48	16	A55316.0
16.50	0.6496	125	190	48	18	A55316.5
17.00	0.6693	125	190	48	18	A55317.0

d_1 Øh_8 mm	d_1 decimal Inch	l_2 mm	l_1 mm	l_3 mm	d_2 Øh_6 mm	A553
17.50	0.6890	130	190	48	18	A55317.5
17.75	0.6988	130	190	48	18	A55317.75
18.00	0.7087	130	190	48	18	A55318.0
19.00	0.7480	135	200	50	20	A55319.0
19.25	0.7579	140	200	50	20	A55319.25
20.00	0.7874	140	200	50	20	A55320.0

A900
A901

- PFX 普通长度钻头
- Broca PFX Série Normal
- Broca PFX Serie Corta
- PFX Jobber Drill

A900	▪	1.1 1.2 1.3 1.4 1.5 1.6 2.1 2.2 2.3 4.1 4.2 4.3 5.1 5.2 5.3 7.2
	•	3.1 3.2 3.3 3.4 6.1 6.2 6.3 6.4 7.1 7.3 7.4 8.1 8.2
A901	▪	1.1 1.2 1.3 1.4 1.5 1.6 2.1 2.2 2.3 3.1 3.2 3.3 3.4 7.4
	•	4.1 4.2 4.3 5.1 5.2 5.3 6.3 6.4

A900	HSS-E	DIN ANSI	6XD	130°			W			
A901	HSS-E	DIN ANSI	6XD	130°	Alcrona Top		W			

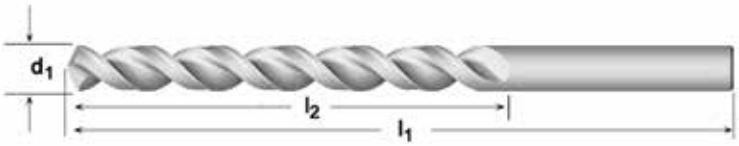

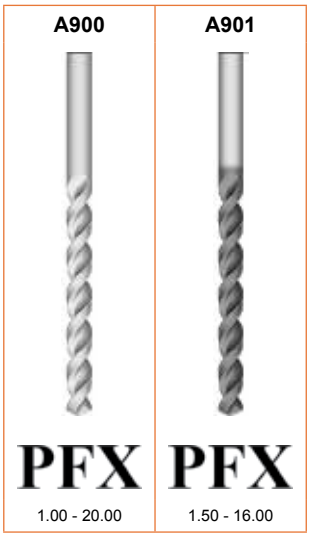

d_1 Øh_8 Inch	d_1 Øh_8 mm	d_1 decimal Inch	l_2 mm	l_1 mm	A900	A901
	1.00	0.0394	12	34	A9001.0	
	1.10	0.0433	14	36	A9001.1	
3/64	1.19	0.0469	19	44	A9003/64	
	1.20	0.0472	16	38	A9001.2	
	1.25	0.0492	16	36	A9001.25	
	1.30	0.0512	16	38	A9001.3	
	1.40	0.0551	18	40	A9001.4	
	1.50	0.0591	18	40	A9001.5	A9011.5
	1.55	0.0610	20	43	A9001.55	A9011.55
1/16	1.59	0.0626	22	48	A9001/16	A9011/16
	1.60	0.0630	20	43	A9001.6	A9011.6
	1.70	0.0669	20	43	A9001.7	
	1.75	0.0689	22	46	A9001.75	A9011.75
	1.80	0.0709	22	46	A9001.8	A9011.8
	1.90	0.0748	22	46	A9001.9	A9011.9
5/64	1.98	0.0780	25	51	A9005/64	A9015/64
	2.00	0.0787	24	49	A9002.0	A9012.0
	2.10	0.0827	24	49	A9002.1	A9012.1
	2.15	0.0846	27	53	A9002.15	A9012.15
	2.20	0.0866	27	53	A9002.2	
	2.30	0.0906	27	53	A9002.3	
3/32	2.38	0.0937	32	57	A9003/32	A9013/32
	2.40	0.0945	30	57	A9002.4	A9012.4
	2.50	0.0984	30	57	A9002.5	A9012.5
	2.60	0.1024	30	57	A9002.6	A9012.6
	2.70	0.1063	33	61	A9002.7	A9012.7
7/64	2.78	0.1094	38	67	A9007/64	A9017/64
	2.80	0.1102	33	61	A9002.8	

d_1 Øh_8 Inch	d_1 Øh_8 mm	d_1 decimal Inch	l_2 mm	l_1 mm	A900	A901
	2.90	0.1142	33	61	A9002.9	A9012.9
	3.00	0.1181	33	61	A9003.0	A9013.0
	3.10	0.1220	36	65	A9003.1	A9013.1
1/8	3.18	0.1252	41	70	A9001/8	A9011/8
	3.20	0.1260	36	65	A9003.2	A9013.2
	3.30	0.1299	36	65	A9003.3	A9013.3
	3.40	0.1339	39	70	A9003.4	A9013.4
	3.50	0.1378	39	70	A9003.5	A9013.5
9/64	3.57	0.1406	44	73	A9009/64	A9019/64
	3.60	0.1417	39	70	A9003.6	A9013.6
	3.70	0.1457	39	70	A9003.7	A9013.7
	3.80	0.1496	43	75	A9003.8	A9013.8
	3.90	0.1535	43	75	A9003.9	A9013.9
5/32	3.97	0.1563	51	79	A9005/32	A9015/32
	4.00	0.1575	43	75	A9004.0	A9014.0
	4.10	0.1614	43	75	A9004.1	A9014.1
	4.20	0.1654	43	75	A9004.2	A9014.2
	4.30	0.1693	47	80	A9004.3	A9014.3
11/64	4.37	0.1720	54	83	A90011/64	A90111/64
	4.40	0.1732	47	80	A9004.4	A9014.4
	4.50	0.1772	47	80	A9004.5	A9014.5
	4.60	0.1811	47	80	A9004.6	A9014.6
	4.70	0.1850	47	80	A9004.7	A9014.7
3/16	4.76	0.1874	59	89	A9003/16	A9013/16
	4.80	0.1890	52	86	A9004.8	A9014.8
	4.90	0.1929	52	86	A9004.9	A9014.9
	5.00	0.1969	52	86	A9005.0	A9015.0
	5.10	0.2008	52	86	A9005.1	A9015.1
13/64	5.16	0.2031	62	92	A90013/64	A90113/64
	5.20	0.2047	52	86	A9005.2	A9015.2
	5.30	0.2087	52	86	A9005.3	A9015.3
	5.40	0.2126	57	93	A9005.4	A9015.4
	5.50	0.2165	57	93	A9005.5	A9015.5
7/32	5.56	0.2189	64	95	A9007/32	A9017/32
	5.60	0.2205	57	93	A9005.6	A9015.6
	5.70	0.2244	57	93	A9005.7	A9015.7
	5.80	0.2283	57	93	A9005.8	A9015.8
	5.90	0.2323	57	93	A9005.9	A9015.9
15/64	5.95	0.2343	67	98	A90015/64	A90115/64
	6.00	0.2362	57	93	A9006.0	A9016.0
	6.10	0.2402	63	101	A9006.1	A9016.1
	6.20	0.2441	63	101	A9006.2	A9016.2
	6.30	0.2480	63	101	A9006.3	A9016.3
1/4	6.35	0.2500	70	102	A9001/4	A9011/4
	6.40	0.2520	63	101	A9006.4	A9016.4
	6.50	0.2559	63	101	A9006.5	A9016.5
	6.60	0.2598	63	101	A9006.6	A9016.6
	6.70	0.2638	63	101	A9006.7	A9016.7
17/64	6.75	0.2657	73	105	A90017/64	A90117/64
	6.80	0.2677	69	109	A9006.8	A9016.8
	6.90	0.2717	69	109	A9006.9	A9016.9
	7.00	0.2756	69	109	A9007.0	A9017.0
	7.10	0.2795	69	109	A9007.1	A9017.1
9/32	7.14	0.2811	75	108	A9009/32	A9019/32
	7.20	0.2835	69	109	A9007.2	A9017.2
	7.30	0.2874	69	109	A9007.3	A9017.3
	7.40	0.2913	69	109	A9007.4	A9017.4
	7.50	0.2953	69	109	A9007.5	A9017.5
19/64	7.54	0.2969	78	111	A90019/64	A90119/64
	7.60	0.2992	75	117	A9007.6	A9017.6
	7.70	0.3031	75	117	A9007.7	A9017.7
	7.80	0.3071	75	117	A9007.8	A9017.8
	7.90	0.3110	75	117	A9007.9	A9017.9
5/16	7.94	0.3126	81	114	A9005/16	A9015/16
	8.00	0.3150	75	117	A9008.0	A9018.0
	8.10	0.3189	75	117	A9008.1	A9018.1
	8.20	0.3228	75	117	A9008.2	A9018.2
	8.30	0.3268	75	117	A9008.3	A9018.3
21/64	8.33	0.3280	84	117	A90021/64	A90121/64
	8.40	0.3307	75	117	A9008.4	A9018.4

d_1 Øh_8 Inch	d_1 Øh_8 mm	d_1 decimal Inch	l_2 mm	l_1 mm	A900	A901
	8.50	0.3346	75	117	A9008.5	A9018.5
	8.60	0.3386	81	125	A9008.6	A9018.6
	8.70	0.3425	81	125	A9008.7	A9018.7
11/32	8.73	0.3437	87	121	A90011/32	A90111/32
	8.80	0.3465	81	125	A9008.8	A9018.8
	8.90	0.3504	81	125	A9008.9	A9018.9
	9.00	0.3543	81	125	A9009.0	A9019.0
	9.10	0.3583	81	125	A9009.1	A9019.1
23/64	9.13	0.3594	89	124	A90023/64	A90123/64
	9.20	0.3622	81	125	A9009.2	A9019.2
	9.30	0.3661	81	125	A9009.3	A9019.3
	9.40	0.3701	81	125	A9009.4	A9019.4
	9.50	0.3740	81	125	A9009.5	A9019.5
3/8	9.52	0.3748	92	127	A9003/8	A9013/8
	9.60	0.3780	87	133	A9009.6	A9019.6
	9.70	0.3819	87	133	A9009.7	A9019.7
	9.80	0.3858	87	133	A9009.8	A9019.8
	9.90	0.3898	87	133	A9009.9	A9019.9
25/64	9.92	0.3906	95	130	A90025/64	A90125/64
	10.00	0.3937	87	133	A90010.0	A90110.0
	10.20	0.4016	87	133	A90010.2	A90110.2
	10.30	0.4055	87	133	A90010.3	A90110.3
13/32	10.32	0.4063	98	133	A90013/32	A90113/32
	10.40	0.4094	87	133	A90010.4	A90110.4
	10.50	0.4134	87	133	A90010.5	A90110.5
27/64	10.72	0.4220	100	137	A90027/64	A90127/64
	10.80	0.4252	94	142	A90010.8	A90110.8
	11.00	0.4331	94	142	A90011.0	A90111.0
7/16	11.11	0.4374	103	140	A9007/16	A9017/16
	11.50	0.4528	94	142	A90011.5	A90111.5
29/64	11.51	0.4531	106	143	A90029/64	A90129/64
	11.80	0.4646	94	142	A90011.8	A90111.8
15/32	11.91	0.4689	110	146	A90015/32	A90115/32
	12.00	0.4724	101	151	A90012.0	A90112.0
31/64	12.30	0.4843	111	149	A90031/64	A90131/64
	12.50	0.4921	101	151	A90012.5	A90112.5
1/2	12.70	0.5000	101	151	A9001/2	A9011/2
	13.00	0.5118	101	151	A90013.0	A90113.0
33/64	13.10	0.5157	122	168	A90033/64	A90133/64
	13.50	0.5315	108	160	A90013.5	A90113.5
35/64	13.89	0.5469	122	168	A90035/64	A90135/64
	14.00	0.5512	108	160	A90014.0	A90114.0
9/16	14.29	0.5626	122	168	A9009/16	A9019/16
	14.50	0.5709	114	169	A90014.5	A90114.5
37/64	14.68	0.5780	122	168	A90037/64	A90137/64
	15.00	0.5906	114	169	A90015.0	A90115.0
19/32	15.08	0.5937	132	181	A90019/32	A90119/32
39/64	15.48	0.6094	132	181	A90039/64	A90139/64
	15.50	0.6102	120	178	A90015.5	A90115.5
5/8	15.88	0.6252	132	181	A9005/8	A9015/8
	16.00	0.6299	120	178	A90016.0	A90116.0
41/64	16.27	0.6406	132	181	A90041/64	
	16.50	0.6496	125	184	A90016.5	
21/32	16.67	0.6563	132	181	A90021/32	
	17.00	0.6693	125	184	A90017.0	
43/64	17.07	0.6720	143	194	A90043/64	
11/16	17.46	0.6874	143	194	A90011/16	
	17.50	0.6890	130	191	A90017.5	
45/64	17.86	0.7031	130	191	A90045/64	
	18.00	0.7087	130	191	A90018.0	
23/32	18.26	0.7189	130	191	A90023/32	
	18.50	0.7283	135	198	A90018.5	
47/64	18.65	0.7343	135	198	A90047/64	
	19.00	0.7480	135	198	A90019.0	
3/4	19.05	0.7500	135	198	A9003/4	
49/64	19.45	0.7657	135	198	A90049/64	
	19.50	0.7677	140	205	A90019.5	
25/32	19.84	0.7811	140	205	A90025/32	
	20.00	0.7874	140	205	A90020.0	

A243
A244

- 航空用钻头
- Broca Longa para Indústria Aeronáutica
- Broca extralarga para la industria Aeronáutica
- Aircraft Extension Drill

总长 150 mm
Comprimento total 150mm
Longitud Total 150 mm
6” Overall Length

A243; A244											
▪	1.5	1.6	2.2	2.3	3.4	4.1	4.2	4.3	5.1	6.4	7.4
•	1.3	1.4	2.1	3.1	3.2	3.3	5.2	5.3	6.3	9.1	

A243	HSS	NAS 907	4XD	135°			N		
A244	HSS	NAS 907	4XD	118°			N		

A243	A244
	
3/32 - 1/4	1/8 - 1/4

d_1 Øh8 Inch	d_1 decimal Inch	l_2 Inch	l_1 Inch	A243	A244
3/32	0.0938	1.1/4	6“	A2433/32X6	
40	0.0980	1.3/8	6“	A243N40X6	
1/8	0.1250	1.5/8	6“	A2431/8X6	A2441/8X6
30	0.1285	1.5/8	6“	A243N30X6	
5/32	0.1563	2“	6“	A2435/32X6	A2445/32X6
21	0.1590	2.1/8	6“	A243N21X6	
20	0.1610	2.1/8	6“	A243N20X6	
3/16	0.1875	2.5/16	6“	A2433/16X6	A2443/16X6
11	0.1910	2.5/16	6“	A243N11X6	
10	0.1935	2.7/16	6“	A243N10X6	
1/4	0.2500	2.3/4	6“	A2431/4X6	A2441/4X6

DORMER

A110

- 长系列钻头
- Broca Série Longa
- Broca, serie larga
- Long Series Drill

小于1.0 mm 和 1/16” 为光亮
Brilhante abaixo de 1,0mm, 1/16
Brillante por debajo de 1,0mm,1/16”
Bright below 1.0mm, 1/16”

A110 • 1.1 1.2 1.3 1.4 1.5 1.6 2.1 2.2 2.3 3.1 3.2 3.3 3.4 4.1 4.2 4.3 5.1 5.2 5.3 6.1 6.2 6.3 6.4 7.1 7.2 7.3 7.4 8.1 8.2 8.3 9.1

A110 HSS | DIN 340 | 6XD | 118° | ST | N

A110

0.50 - 1“

d_1 Øh_8 Inch	d_1 Øh_8 mm	d_1 decimal Inch	l_2 mm	l_1 mm	A110
	0.50	0.0197	12	32	A110.5
	0.60	0.0236	15	35	A110.6
	0.70	0.0276	21	42	A110.7
1/32	0.79	0.0311	25	46	A1101/32
	0.80	0.0315	25	46	A110.8
	0.90	0.0354	29	51	A110.9
	1.00	0.0394	33	56	A1101.0
	1.10	0.0433	37	60	A1101.1
	1.20	0.0472	41	65	A1101.2
	1.30	0.0512	41	65	A1101.3
	1.40	0.0551	45	70	A1101.4
	1.50	0.0591	45	70	A1101.5
1/16	1.59	0.0626	50	76	A1101/16
	1.60	0.0630	50	76	A1101.6
	1.70	0.0669	50	76	A1101.7
	1.75	0.0689	53	80	A1101.75
	1.80	0.0709	53	80	A1101.8
	1.90	0.0748	53	80	A1101.9
5/64	1.98	0.0780	56	85	A1105/64
	2.00	0.0787	56	85	A1102.0
	2.05	0.0807	56	85	A1102.05
	2.10	0.0827	56	85	A1102.1
	2.20	0.0866	59	90	A1102.2
	2.25	0.0886	59	90	A1102.25
	2.30	0.0906	59	90	A1102.3
3/32	2.38	0.0937	62	95	A1103/32
	2.40	0.0945	62	95	A1102.4
	2.50	0.0984	62	95	A1102.5
	2.60	0.1024	62	95	A1102.6
	2.70	0.1063	66	100	A1102.7
7/64	2.78	0.1094	66	100	A1107/64
	2.80	0.1102	66	100	A1102.8
	2.90	0.1142	66	100	A1102.9
	3.00	0.1181	66	100	A1103.0
	3.10	0.1220	69	106	A1103.1
1/8	3.18	0.1252	69	106	A1101/8
	3.20	0.1260	69	106	A1103.2
	3.25	0.1280	69	106	A1103.25

d_1 Øh_8 Inch	d_1 Øh_8 mm	d_1 decimal Inch	l_2 mm	l_1 mm	A110
	3.30	0.1299	69	106	A1103.3
	3.40	0.1339	73	112	A1103.4
	3.50	0.1378	73	112	A1103.5
9/64	3.57	0.1406	73	112	A1109/64
	3.60	0.1417	73	112	A1103.6
	3.70	0.1457	73	112	A1103.7
	3.75	0.1476	73	112	A1103.75
	3.80	0.1496	78	119	A1103.8
	3.90	0.1535	78	119	A1103.9
5/32	3.97	0.1563	78	119	A1105/32
	4.00	0.1575	78	119	A1104.0
	4.10	0.1614	78	119	A1104.1
	4.20	0.1654	78	119	A1104.2
	4.25	0.1673	78	119	A1104.25
	4.30	0.1693	82	126	A1104.3
11/64	4.37	0.1720	82	126	A11011/64
	4.40	0.1732	82	126	A1104.4
	4.50	0.1772	82	126	A1104.5
	4.60	0.1811	82	126	A1104.6
	4.70	0.1850	82	126	A1104.7
	4.75	0.1870	82	126	A1104.75
3/16	4.76	0.1874	87	132	A1103/16
	4.80	0.1890	87	132	A1104.8
	4.90	0.1929	87	132	A1104.9
	5.00	0.1969	87	132	A1105.0
	5.10	0.2008	87	132	A1105.1
13/64	5.16	0.2031	87	132	A11013/64
	5.20	0.2047	87	132	A1105.2
	5.25	0.2067	87	132	A1105.25
	5.30	0.2087	87	132	A1105.3
	5.40	0.2126	91	139	A1105.4
	5.50	0.2165	91	139	A1105.5
7/32	5.56	0.2189	91	139	A1107/32
	5.60	0.2205	91	139	A1105.6
	5.70	0.2244	91	139	A1105.7
	5.75	0.2264	91	139	A1105.75
	5.80	0.2283	91	139	A1105.8
	5.90	0.2323	91	139	A1105.9
15/64	5.95	0.2343	91	139	A11015/64
	6.00	0.2362	91	139	A1106.0
	6.10	0.2402	97	148	A1106.1
	6.20	0.2441	97	148	A1106.2
	6.25	0.2461	97	148	A1106.25
	6.30	0.2480	97	148	A1106.3
1/4	6.35	0.2500	97	148	A1101/4
	6.40	0.2520	97	148	A1106.4
	6.50	0.2559	97	148	A1106.5
	6.60	0.2598	97	148	A1106.6
	6.70	0.2638	97	148	A1106.7
17/64	6.75	0.2657	102	156	A11017/64
	6.75	0.2657	102	156	A1106.75
	6.80	0.2677	102	156	A1106.8
	6.90	0.2717	102	156	A1106.9
	7.00	0.2756	102	156	A1107.0
	7.10	0.2795	102	156	A1107.1
9/32	7.14	0.2811	102	156	A1109/32
	7.20	0.2835	102	156	A1107.2
	7.25	0.2854	102	156	A1107.25
	7.30	0.2874	102	156	A1107.3
	7.40	0.2913	102	156	A1107.4
	7.50	0.2953	102	156	A1107.5
	7.60	0.2992	109	165	A1107.6
	7.70	0.3031	109	165	A1107.7
	7.75	0.3051	109	165	A1107.75
	7.80	0.3071	109	165	A1107.8
	7.90	0.3110	109	165	A1107.9
5/16	7.94	0.3126	109	165	A1105/16
	8.00	0.3150	109	165	A1108.0
	8.10	0.3189	109	165	A1108.1
	8.20	0.3228	109	165	A1108.2

d_1 Øh_8 Inch	d_1 Øh_8 mm	d_1 decimal Inch	l_2 mm	l_1 mm	A110
	8.25	0.3248	109	165	A1108.25
	8.30	0.3268	109	165	A1108.3
	8.40	0.3307	109	165	A1108.4
	8.50	0.3346	109	165	A1108.5
	8.60	0.3386	115	175	A1108.6
	8.70	0.3425	115	175	A1108.7
11/32	8.73	0.3437	115	175	A11011/32
	8.75	0.3445	115	175	A1108.75
	8.80	0.3465	115	175	A1108.8
	8.90	0.3504	115	175	A1108.9
	9.00	0.3543	115	175	A1109.0
	9.10	0.3583	115	175	A1109.1
	9.20	0.3622	115	175	A1109.2
	9.25	0.3642	115	175	A1109.25
	9.30	0.3661	115	175	A1109.3
	9.40	0.3701	115	175	A1109.4
	9.50	0.3740	115	175	A1109.5
3/8	9.52	0.3748	121	184	A1103/8
	9.60	0.3780	121	184	A1109.6
	9.70	0.3819	121	184	A1109.7
	9.75	0.3839	121	184	A1109.75
	9.80	0.3858	121	184	A1109.8
	9.90	0.3898	121	184	A1109.9
	10.00	0.3937	121	184	A11010.0
	10.10	0.3976	121	184	A11010.1
	10.20	0.4016	121	184	A11010.2
	10.25	0.4035	121	184	A11010.25
	10.30	0.4055	121	184	A11010.3
13/32	10.32	0.4063	121	184	A11013/32
	10.50	0.4134	121	184	A11010.5
	10.75	0.4232	128	195	A11010.75
	10.80	0.4252	128	195	A11010.8
	11.00	0.4331	128	195	A11011.0
7/16	11.11	0.4374	128	195	A1107/16
	11.25	0.4429	128	195	A11011.25
	11.40	0.4488	128	195	A11011.4
	11.50	0.4528	128	195	A11011.5
	11.75	0.4626	128	195	A11011.75
	12.00	0.4724	134	205	A11012.0
	12.10	0.4764	134	205	A11012.1
	12.25	0.4823	134	205	A11012.25
	12.50	0.4921	134	205	A11012.5
1/2	12.70	0.5000	134	205	A1101/2
	13.00	0.5118	134	205	A11013.0
17/32	13.49	0.5311	140	214	A11017/32
	13.50	0.5315	140	214	A11013.5
	14.00	0.5512	140	214	A11014.0
9/16	14.29	0.5626	144	220	A1109/16
	14.50	0.5709	144	220	A11014.5
	15.00	0.5906	144	220	A11015.0
	15.50	0.6102	149	227	A11015.5
5/8	15.88	0.6252	149	227	A1105/8
	16.00	0.6299	149	227	A11016.0
	16.50	0.6496	154	235	A11016.5
	17.00	0.6693	154	235	A11017.0
11/16	17.46	0.6874	158	241	A11011/16
	17.50	0.6890	158	241	A11017.5
	18.00	0.7087	158	241	A11018.0
	18.50	0.7283	162	247	A11018.5
	19.00	0.7480	162	247	A11019.0
3/4	19.05	0.7500	166	254	A1103/4
	19.50	0.7677	166	254	A11019.5
	20.00	0.7874	166	254	A11020.0
	21.00	0.8268	171	261	A11021.0
	22.00	0.8661	176	268	A11022.0
7/8	22.22	0.8748	176	268	A1107/8
15/16	23.81	0.9374	185	282	A11015/16
1“	25.40	1.0000	190	290	A1101

A940
A941

- PFX 长系列钻头
- Broca PFX Série Longa
- Broca PFX, serie larga
- PFX Long Series Drill

A940	▪	1.1 1.2 1.3 1.4 1.5 1.6 2.1 2.2 2.3 4.1 4.2 4.3 7.2
	•	3.2 3.3 3.4 6.1 6.2 6.3 6.4 7.1 7.3 7.4 8.1 8.2
A941	▪	1.1 1.2 1.3 1.4 1.5 1.6 2.1 2.2 2.3 3.1 3.2 3.3 3.4 7.4
	•	4.1 4.2 4.3 6.3 6.4

A940 HSS-E DIN ANSI 10XD 130° W

A941 HSS-E DIN ANSI 10XD 130° Alcrona Top W

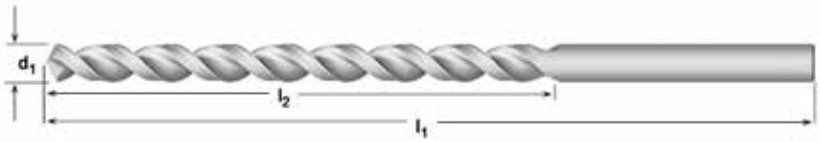

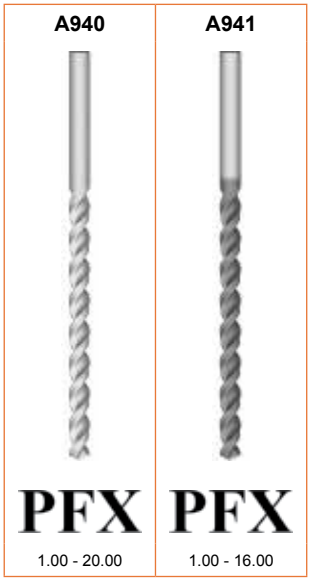

d_1 Øh_8 Inch	d_1 Øh_8 mm	d_1 decimal Inch	l_2 mm	l_1 mm	A940	A941
	1.00	0.0394	33	56	A9401.0	A9411.0
	1.10	0.0433	37	60	A9401.1	
3/64	1.19	0.0469	29	57	A9403/64	A9413/64
	1.20	0.0472	41	65	A9401.2	
	1.30	0.0512	41	65	A9401.3	
	1.40	0.0551	45	70	A9401.4	
	1.50	0.0591	45	70	A9401.5	A9411.5
1/16	1.59	0.0626	44	76	A9401/16	A9411/16
	1.60	0.0630	50	76	A9401.6	
	1.70	0.0669	50	76	A9401.7	
	1.80	0.0709	53	80	A9401.8	
	1.90	0.0748	53	80	A9401.9	
5/64	1.98	0.0780	51	95	A9405/64	A9415/64
	2.00	0.0787	56	85	A9402.0	A9412.0
	2.10	0.0827	56	85	A9402.1	
	2.20	0.0866	59	90	A9402.2	
	2.30	0.0906	59	90	A9402.3	
3/32	2.38	0.0937	57	108	A9403/32	A9413/32
	2.40	0.0945	62	95	A9402.4	
	2.50	0.0984	62	95	A9402.5	A9412.5
	2.60	0.1024	62	95	A9402.6	
	2.70	0.1063	66	100	A9402.7	
7/64	2.78	0.1094	64	117	A9407/64	A9417/64
	2.80	0.1102	66	100	A9402.8	
	2.90	0.1142	66	100	A9402.9	
	3.00	0.1181	66	100	A9403.0	A9413.0

DORMER

d_1 Øh_8 Inch	d_1 Øh_8 mm	d_1 decimal Inch	l_2 mm	l_1 mm	A940	A941
	3.10	0.1220	69	106	A9403.1	A9413.1
1/8	3.18	0.1252	70	130	A9401/8	A9411/8
	3.20	0.1260	69	106	A9403.2	A9413.2
	3.30	0.1299	69	106	A9403.3	A9413.3
	3.40	0.1339	73	112	A9403.4	A9413.4
	3.50	0.1378	73	112	A9403.5	A9413.5
9/64	3.57	0.1406	76	137	A9409/64	A9419/64
	3.60	0.1417	73	112	A9403.6	A9413.6
	3.70	0.1457	73	112	A9403.7	A9413.7
	3.80	0.1496	78	119	A9403.8	A9413.8
	3.90	0.1535	78	119	A9403.9	A9413.9
5/32	3.97	0.1563	76	137	A9405/32	A9415/32
	4.00	0.1575	78	119	A9404.0	A9414.0
	4.10	0.1614	78	119	A9404.1	A9414.1
	4.20	0.1654	78	119	A9404.2	A9414.2
	4.30	0.1693	82	126	A9404.3	A9414.3
11/64	4.37	0.1720	86	146	A94011/64	A94111/64
	4.40	0.1732	82	126	A9404.4	A9414.4
	4.50	0.1772	82	126	A9404.5	A9414.5
	4.60	0.1811	82	126	A9404.6	A9414.6
	4.70	0.1850	82	126	A9404.7	A9414.7
3/16	4.76	0.1874	86	146	A9403/16	A9413/16
	4.80	0.1890	87	132	A9404.8	A9414.8
	4.90	0.1929	87	132	A9404.9	A9414.9
	5.00	0.1969	87	132	A9405.0	A9415.0
	5.10	0.2008	87	132	A9405.1	A9415.1
13/64	5.16	0.2031	92	152	A94013/64	A94113/64
	5.20	0.2047	87	132	A9405.2	A9415.2
	5.30	0.2087	87	132	A9405.3	A9415.3
	5.40	0.2126	91	139	A9405.4	A9415.4
	5.50	0.2165	91	139	A9405.5	A9415.5
7/32	5.56	0.2189	92	152	A9407/32	A9417/32
	5.60	0.2205	91	139	A9405.6	A9415.6
	5.70	0.2244	91	139	A9405.7	A9415.7
	5.80	0.2283	91	139	A9405.8	A9415.8
	5.90	0.2323	91	139	A9405.9	A9415.9
15/64	5.95	0.2343	95	156	A94015/64	A94115/64
	6.00	0.2362	91	139	A9406.0	A9416.0
	6.10	0.2402	97	148	A9406.1	A9416.1
	6.20	0.2441	97	148	A9406.2	A9416.2
	6.30	0.2480	97	148	A9406.3	A9416.3
1/4	6.35	0.2500	95	156	A9401/4	A9411/4
	6.40	0.2520	97	148	A9406.4	A9416.4
	6.50	0.2559	97	148	A9406.5	A9416.5
	6.60	0.2598	97	148	A9406.6	A9416.6
	6.70	0.2638	97	148	A9406.7	A9416.7
17/64	6.75	0.2657	98	159	A94017/64	A94117/64
	6.80	0.2677	102	156	A9406.8	A9416.8
	6.90	0.2717	102	156	A9406.9	A9416.9
	7.00	0.2756	102	156	A9407.0	A9417.0
	7.10	0.2795	102	156	A9407.1	A9417.1
9/32	7.14	0.2811	98	159	A9409/32	A9419/32
	7.20	0.2835	102	156	A9407.2	A9417.2
	7.30	0.2874	102	156	A9407.3	A9417.3
	7.40	0.2913	102	156	A9407.4	A9417.4
	7.50	0.2953	102	156	A9407.5	A9417.5
19/64	7.54	0.2969	102	162	A94019/64	A94119/64
	7.60	0.2992	109	165	A9407.6	A9417.6
	7.70	0.3031	109	165	A9407.7	A9417.7
	7.80	0.3071	109	165	A9407.8	A9417.8
	7.90	0.3110	109	165	A9407.9	A9417.9
5/16	7.94	0.3126	102	162	A9405/16	A9415/16
	8.00	0.3150	109	165	A9408.0	A9418.0
	8.10	0.3189	109	165	A9408.1	A9418.1
	8.20	0.3228	109	165	A9408.2	A9418.2
	8.30	0.3268	109	165	A9408.3	A9418.3
21/64	8.33	0.3280	105	165	A94021/64	A94121/64
	8.40	0.3307	109	165	A9408.4	A9418.4
	8.50	0.3346	109	165	A9408.5	A9418.5
	8.60	0.3386	115	175	A9408.6	A9418.6

d_1 Øh$_8$ Inch	d_1 Øh$_8$ mm	d_1 decimal Inch	l_2 mm	l_1 mm	A940	A941
	8.70	0.3425	115	175	A9408.7	A9418.7
11/32	8.73	0.3437	105	165	A94011/32	A94111/32
	8.80	0.3465	115	175	A9408.8	A9418.8
	8.90	0.3504	115	175	A9408.9	A9418.9
	9.00	0.3543	115	175	A9409.0	A9419.0
	9.10	0.3583	115	175	A9409.1	A9419.1
23/64	9.13	0.3594	108	171	A94023/64	A94123/64
	9.20	0.3622	115	175	A9409.2	A9419.2
	9.30	0.3661	115	175	A9409.3	A9419.3
	9.40	0.3701	115	175	A9409.4	A9419.4
	9.50	0.3740	115	175	A9409.5	A9419.5
3/8	9.52	0.3748	108	171	A9403/8	A9413/8
	9.60	0.3780	121	184	A9409.6 [3]	A9419.6 [3]
	9.70	0.3819	121	184	A9409.7 [3]	A9419.7 [3]
	9.80	0.3858	121	184	A9409.8 [3]	A9419.8 [3]
	9.90	0.3898	121	184	A9409.9 [3]	A9419.9 [3]
25/64	9.92	0.3906	111	178	A94025/64 [3]	A94125/64 [3]
	10.00	0.3937	121	184	A94010.0 [3]	A94110.0 [3]
	10.20	0.4016	121	184	A94010.2 [3]	A94110.2 [3]
	10.30	0.4055	121	184	A94010.3 [3]	A94110.3 [3]
13/32	10.32	0.4063	111	178	A94013/32 [3]	A94113/32 [3]
	10.50	0.4134	121	184	A94010.5 [3]	A94110.5 [3]
27/64	10.72	0.4220	117	184	A94027/64 [3]	A94127/64 [3]
	11.00	0.4331	128	195	A94011.0 [3]	A94111.0 [3]
7/16	11.11	0.4374	117	184	A9407/16 [3]	A9417/16 [3]
	11.20	0.4409	128	195	A94011.2 [3]	A94111.2 [3]
	11.50	0.4528	128	195	A94011.5 [3]	A94111.5 [3]
29/64	11.51	0.4531	121	190	A94029/64 [3]	A94129/64 [3]
	11.80	0.4646	128	195	A94011.8 [3]	A94111.8 [3]
15/32	11.91	0.4689	121	190	A94015/32 [3]	A94115/32 [3]
	12.00	0.4724	134	205	A94012.0 [3]	A94112.0 [3]
	12.20	0.4803	134	205	A94012.2 [3]	A94112.2 [3]
31/64	12.30	0.4843	121	197	A94031/64 [3]	A94131/64 [3]
	12.50	0.4921	134	205	A94012.5 [3]	A94112.5 [3]
1/2	12.70	0.5000	121	197	A9401/2 [3]	A9411/2 [3]
	13.00	0.5118	134	205	A94013.0 [3]	A94113.0 [3]
33/64	13.10	0.5157	121	203	A94033/64 [3]	A94133/64 [3]
17/32	13.49	0.5311	121	203	A94017/32 [3]	
	13.50	0.5315	140	214	A94013.5 [3]	A94113.5 [3]
35/64	13.89	0.5469	124	210	A94035/64 [3]	A94135/64 [3]
	14.00	0.5512	140	214	A94014.0 [3]	A94114.0 [3]
9/16	14.29	0.5626	124	210	A9409/16 [3]	A9419/16 [3]
	14.50	0.5709	144	220	A94014.5 [3]	A94114.5 [3]
37/64	14.68	0.5780	124	222	A94037/64 [3]	A94137/64 [3]
	15.00	0.5906	144	220	A94015.0 [3]	A94115.0 [3]
19/32	15.08	0.5937	124	222	A94019/32 [3]	A94119/32 [3]
39/64	15.48	0.6094	124	222	A94039/64 [3]	A94139/64 [3]
	15.50	0.6102	149	227	A94015.5 [3]	A94115.5 [3]
5/8	15.88	0.6252	124	222	A9405/8 [3]	A9415/8 [3]
	16.00	0.6299	149	227	A94016.0 [3]	A94116.0 [3]
41/64	16.27	0.6406	130	229	A94041/64 [3]	
	16.50	0.6496	154	235	A94016.5 [3]	
21/32	16.67	0.6563	130	229	A94021/32 [3]	
	17.00	0.6693	154	235	A94017.0 [3]	
43/64	17.07	0.6720	137	235	A94043/64 [3]	
11/16	17.46	0.6874	137	235	A94011/16 [3]	
	17.50	0.6890	158	241	A94017.5 [3]	
45/64	17.86	0.7031	143	241	A94045/64 [3]	
	18.00	0.7087	158	241	A94018.0 [3]	
23/32	18.26	0.7189	143	241	A94023/32 [3]	
47/64	18.65	0.7343	149	248	A94047/64 [3]	
	19.00	0.7480	162	247	A94019.0 [3]	
3/4	19.05	0.7500	149	248	A9403/4 [3]	
49/64	19.45	0.7657	152	251	A94049/64 [3]	
25/32	19.84	0.7811	152	251	A94025/32 [3]	
	20.00	0.7874	166	254	A94020.0 [3]	

[3] 最大加工10xD / < 10xD

A125

- 超长钻头
- Broca Série Extra Longa
- Broca serie extra larga
- Extra Length Drill

小于2.2 mm 和 5/64” 为光亮
Brilhante abaixo de 2.2mm, 5/64
Brillante por debajo de 2,2 mm, 5/64”
Bright below 2.2mm, 5/64”

A125

▪ 1.1 1.2

• 1.3 1.4 1.5 1.6 2.1 2.2 2.3 3.1 3.2 3.3 3.4 4.1 4.2 4.3 5.1 5.2 5.3 6.1 6.2 6.3 6.4 7.1 7.2 7.3 7.4 8.1 8.2 8.3 9.1

A125 HSS | BS 328 | 10XD | 118° | ST | N

A125

1.40 - 1“

d_1 Øh_8 Inch	d_1 Øh_8 mm	d_1 decimal Inch	l_2 mm	l_1 mm	A125
	1.40	0.0551	100	160	A1251.4X160
	1.50	0.0591	80	125	A1251.5X125
	1.50	0.0591	100	160	A1251.5X160
1/16	1.59	0.0626	80	125	A1251/16X125
1/16	1.59	0.0626	100	160	A1251/16X160
	1.80	0.0709	100	160	A1251.8X160
5/64	1.98	0.0780	80	125	A1255/64X125
5/64	1.98	0.0780	100	160	A1255/64X160
	2.00	0.0787	80	125	A1252.0X125
	2.00	0.0787	100	160	A1252.0X160
	2.20	0.0866	100	160	A1252.2X160
3/32	2.38	0.0937	80	125	A1253/32X125
3/32	2.38	0.0937	100	160	A1253/32X160
	2.50	0.0984	80	125	A1252.5X125
	2.50	0.0984	100	160	A1252.5X160
7/64	2.78	0.1094	80	125	A1257/64X125
7/64	2.78	0.1094	100	160	A1257/64X160
	3.00	0.1181	100	160	A1253.0X160
	3.00	0.1181	150	200	A1253.0X200
	3.00	0.1181	200	250	A1253.0X250
1/8	3.18	0.1252	100	160	A1251/8X160
1/8	3.18	0.1252	150	200	A1251/8X200
1/8	3.18	0.1252	200	250	A1251/8X250
1/8	3.18	0.1252	250	310	A1251/8X315
	3.30	0.1299	100	160	A1253.3X160
	3.50	0.1378	100	160	A1253.5X160
	3.50	0.1378	150	200	A1253.5X200
	3.50	0.1378	200	250	A1253.5X250
9/64	3.57	0.1406	100	160	A1259/64X160
9/64	3.57	0.1406	150	200	A1259/64X200
9/64	3.57	0.1406	250	310	A1259/64X315
5/32	3.97	0.1563	100	160	A1255/32X160
5/32	3.97	0.1563	150	200	A1255/32X200
5/32	3.97	0.1563	200	250	A1255/32X250

d_1 Øh$_8$ Inch	d_1 Øh$_8$ mm	d_1 decimal Inch	l_2 mm	l_1 mm	A125
5/32	3.97	0.1563	250	310	A1255/32X315
	4.00	0.1575	100	160	A1254.0X160
	4.00	0.1575	150	200	A1254.0X200
	4.00	0.1575	200	250	A1254.0X250
	4.00	0.1575	250	310	A1254.0X315
11/64	4.37	0.1720	100	160	A12511/64X160
11/64	4.37	0.1720	150	200	A12511/64X200
11/64	4.37	0.1720	250	310	A12511/64X315
	4.50	0.1772	100	160	A1254.5X160
	4.50	0.1772	150	200	A1254.5X200
	4.50	0.1772	200	250	A1254.5X250
	4.50	0.1772	250	310	A1254.5X315
3/16	4.76	0.1874	100	160	A1253/16X160
3/16	4.76	0.1874	150	200	A1253/16X200
3/16	4.76	0.1874	200	250	A1253/16X250
3/16	4.76	0.1874	250	310	A1253/16X315
3/16	4.76	0.1874	300	400	A1253/16X400
	5.00	0.1969	100	160	A1255.0X160
	5.00	0.1969	150	200	A1255.0X200
	5.00	0.1969	200	250	A1255.0X250
	5.00	0.1969	250	310	A1255.0X315
	5.00	0.1969	300	400	A1255.0X400
13/64	5.16	0.2031	150	200	A12513/64X200
13/64	5.16	0.2031	200	250	A12513/64X250
13/64	5.16	0.2031	250	310	A12513/64X315
	5.50	0.2165	150	200	A1255.5X200
	5.50	0.2165	200	250	A1255.5X250
	5.50	0.2165	250	310	A1255.5X315
7/32	5.56	0.2189	150	200	A1257/32X200
7/32	5.56	0.2189	200	250	A1257/32X250
7/32	5.56	0.2189	250	310	A1257/32X315
15/64	5.95	0.2343	150	200	A12515/64X200
15/64	5.95	0.2343	200	250	A12515/64X250
15/64	5.95	0.2343	250	310	A12515/64X315
	6.00	0.2362	150	200	A1256.0X200
	6.00	0.2362	200	250	A1256.0X250
	6.00	0.2362	250	310	A1256.0X315
	6.00	0.2362	300	400	A1256.0X400
1/4	6.35	0.2500	150	200	A1251/4X200
1/4	6.35	0.2500	200	250	A1251/4X250
1/4	6.35	0.2500	250	310	A1251/4X315
1/4	6.35	0.2500	300	400	A1251/4X400
1/4	6.35	0.2500	400	460	A1251/4X500
	6.50	0.2559	150	200	A1256.5X200
	6.50	0.2559	200	250	A1256.5X250
	6.50	0.2559	250	310	A1256.5X315
17/64	6.75	0.2657	150	200	A12517/64X200
17/64	6.75	0.2657	200	250	A12517/64X250
17/64	6.75	0.2657	400	460	A12517/64X500
	7.00	0.2756	150	200	A1257.0X200
	7.00	0.2756	200	250	A1257.0X250
	7.00	0.2756	250	310	A1257.0X315
9/32	7.14	0.2811	150	200	A1259/32X200
9/32	7.14	0.2811	200	250	A1259/32X250
9/32	7.14	0.2811	250	310	A1259/32X315
9/32	7.14	0.2811	400	460	A1259/32X500
	7.50	0.2953	150	200	A1257.5X200
	7.50	0.2953	200	250	A1257.5X250
	7.50	0.2953	250	310	A1257.5X315
19/64	7.54	0.2969	250	310	A12519/64X315
19/64	7.54	0.2969	400	460	A12519/64X500
5/16	7.94	0.3126	150	200	A1255/16X200
5/16	7.94	0.3126	200	250	A1255/16X250
5/16	7.94	0.3126	250	310	A1255/16X315
5/16	7.94	0.3126	300	400	A1255/16X400
5/16	7.94	0.3126	400	460	A1255/16X500
	8.00	0.3150	200	250	A1258.0X250
	8.00	0.3150	250	310	A1258.0X315
	8.00	0.3150	300	400	A1258.0X400
21/64	8.33	0.3280	250	310	A12521/64X315

DORMER

d_1 Øh8 Inch	d_1 Øh8 mm	d_1 decimal Inch	l_2 mm	l_1 mm	A125
21/64	8.33	0.3280	400	460	A12521/64X500
	8.50	0.3346	200	250	A1258.5X250
	8.50	0.3346	250	310	A1258.5X315
11/32	8.73	0.3437	200	250	A12511/32X250
11/32	8.73	0.3437	250	310	A12511/32X315
11/32	8.73	0.3437	300	400	A12511/32X400
11/32	8.73	0.3437	400	460	A12511/32X500
	9.00	0.3543	200	250	A1259.0X250
	9.00	0.3543	250	310	A1259.0X315
	9.00	0.3543	300	400	A1259.0X400
23/64	9.13	0.3594	250	310	A12523/64X315
23/64	9.13	0.3594	400	460	A12523/64X500
	9.50	0.3740	200	250	A1259.5X250
	9.50	0.3740	250	310	A1259.5X315
3/8	9.52	0.3748	200	250	A1253/8X250
3/8	9.52	0.3748	250	310	A1253/8X315
3/8	9.52	0.3748	300	400	A1253/8X400
3/8	9.52	0.3748	400	460	A1253/8X500
25/64	9.92	0.3906	250	310	A12525/64X315
25/64	9.92	0.3906	400	460	A12525/64X500
	10.00	0.3937	200	250	A12510.0X250
	10.00	0.3937	250	310	A12510.0X315
	10.00	0.3937	300	400	A12510.0X400
13/32	10.32	0.4063	200	250	A12513/32X250
13/32	10.32	0.4063	250	310	A12513/32X315
13/32	10.32	0.4063	400	460	A12513/32X500
	10.50	0.4134	200	250	A12510.5X250
	10.50	0.4134	250	310	A12510.5X315
	10.50	0.4134	300	400	A12510.5X400
27/64	10.72	0.4220	250	310	A12527/64X315
	11.00	0.4331	200	250	A12511.0X250
	11.00	0.4331	250	310	A12511.0X315
	11.00	0.4331	300	400	A12511.0X400
7/16	11.11	0.4374	200	250	A1257/16X250
7/16	11.11	0.4374	250	310	A1257/16X315
7/16	11.11	0.4374	300	400	A1257/16X400
7/16	11.11	0.4374	400	460	A1257/16X500
29/64	11.51	0.4531	250	310	A12529/64X315
29/64	11.51	0.4531	400	460	A12529/64X500
15/32	11.91	0.4689	200	250	A12515/32X250
15/32	11.91	0.4689	250	310	A12515/32X315
15/32	11.91	0.4689	400	460	A12515/32X500
	12.00	0.4724	200	250	A12512.0X250
	12.00	0.4724	250	310	A12512.0X315
	12.00	0.4724	300	400	A12512.0X400
31/64	12.30	0.4843	250	310	A12531/64X315
31/64	12.30	0.4843	400	460	A12531/64X500
1/2	12.70	0.5000	200	250	A1251/2X250
1/2	12.70	0.5000	250	310	A1251/2X315
1/2	12.70	0.5000	300	400	A1251/2X400
1/2	12.70	0.5000	400	460	A1251/2X500
	13.00	0.5118	250	310	A12513.0X315
	13.00	0.5118	300	400	A12513.0X400
33/64	13.10	0.5157	250	310	A12533/64X315
33/64	13.10	0.5157	400	460	A12533/64X500
17/32	13.49	0.5311	250	310	A12517/32X315
17/32	13.49	0.5311	400	460	A12517/32X500
35/64	13.89	0.5469	250	310	A12535/64X315
35/64	13.89	0.5469	400	460	A12535/64X500
	14.00	0.5512	250	310	A12514.0X315
	14.00	0.5512	300	400	A12514.0X400
9/16	14.29	0.5626	250	310	A1259/16X315
9/16	14.29	0.5626	400	460	A1259/16X500
37/64	14.68	0.5780	250	310	A12537/64X315
19/32	15.08	0.5937	250	310	A12519/32X315
19/32	15.08	0.5937	400	460	A12519/32X500
39/64	15.48	0.6094	250	310	A12539/64X315
39/64	15.48	0.6094	400	460	A12539/64X500
5/8	15.88	0.6252	250	310	A1255/8X315
5/8	15.88	0.6252	400	460	A1255/8X500

d_1 Øh_8 Inch	d_1 Øh_8 mm	d_1 decimal Inch	l_2 mm	l_1 mm	A125
21/32	16.67	0.6563	250	310	A12521/32X315
21/32	16.67	0.6563	400	460	A12521/32X500
11/16	17.46	0.6874	250	310	A12511/16X315
11/16	17.46	0.6874	400	460	A12511/16X500
23/32	18.26	0.7189	250	310	A12523/32X315
23/32	18.26	0.7189	400	460	A12523/32X500
3/4	19.05	0.7500	250	310	A1253/4X315
3/4	19.05	0.7500	400	460	A1253/4X500
25/32	19.84	0.7811	400	460	A12525/32X500
13/16	20.64	0.8126	400	460	A12513/16X500
7/8	22.22	0.8748	400	460	A1257/8X500
15/16	23.81	0.9374	400	460	A12515/16X500
1“	25.40	1.0000	400	460	A1251X500

A976 • PFX 超长钻头
A977 • Broca PFX Série Extra Longa
A978 • Broca PFX Extra Larga
A978 • PFX Extra Length Drill

A976; A977; A978														
▪	1.3	1.4	1.5	1.6										
•	1.1	1.2	2.1	2.2	2.3	3.2	3.3	3.4	4.1	4.2	4.3	6.3	6.4	7.4

A976	HSS-E	DIN 1869/1	15XD	130°			W			
A977	HSS-E	DIN 1869/2	20XD	130°			W			
A978	HSS-E	DIN 1869/3	25XD	130°			W			

A976	A977	A978
		
PFX	PFX	PFX
1.50 - 14.00	1.50 - 14.00	3.00 - 10.00

d_1 Øh_8 Inch	d_1 Øh_8 mm	d_1 decimal Inch	l_2 mm	l_1 mm	A976	A977	A978
	1.50	0.0591	75	115	A9761.5		
	1.50	0.0591	100	150		A9771.5 [4]	
1/16	1.59	0.0626	100	150		A9771/16 [4]	
	2.00	0.0787	110	160		A9772.0 [4]	
	2.00	0.0787	85	125	A9762.0X125		
	2.10	0.0827	85	125	A9762.1X125		
	2.20	0.0866	90	135	A9762.2X135		
	2.30	0.0906	90	135	A9762.3X135		
3/32	2.38	0.0937	115	170		A9773/32 [4]	
	2.40	0.0945	95	140	A9762.4X140		
	2.50	0.0984	95	140	A9762.5X140		
	2.60	0.1024	95	140	A9762.6X140		
	2.70	0.1063	100	150	A9762.7X150		
	2.80	0.1102	100	150	A9762.8X150		
	2.90	0.1142	100	150	A9762.9X150		
	3.00	0.1181	100	150	A9763.0X150		
	3.00	0.1181	130	190		A9773.0X190	
	3.00	0.1181	160	240			A9783.0 [4]
	3.10	0.1220	105	155	A9763.1X155		
1/8	3.18	0.1252	105	155	A9761/8		

[4] 多马公司标准 / Padrão Dormer / Norma Dormer / Dormer Standard

d_1 Øh_8 Inch	d_1 Øh_8 mm	d_1 decimal Inch	l_2 mm	l_1 mm	A976	A977	A978
1/8	3.18	0.1252	135	200		A9771/8	
	3.20	0.1260	105	155	A9763.2X155		
	3.30	0.1299	105	155	A9763.3X155		
	3.40	0.1339	115	165	A9763.4X165		
	3.50	0.1378	115	165	A9763.5X165		
	3.50	0.1378	145	210		A9773.5X210	
	3.50	0.1378	180	265			A9783.5X265
	3.60	0.1417	115	165	A9763.6X165		
	3.70	0.1457	115	165	A9763.7X165		
	3.80	0.1496	120	175	A9763.8X175		
	3.90	0.1535	120	175	A9763.9X175		
5/32	3.97	0.1563	120	175	A9765/32		
	4.00	0.1575	120	175	A9764.0X175		
	4.00	0.1575	150	220		A9774.0X220	
	4.00	0.1575	190	280			A9784.0X280
	4.10	0.1614	120	175	A9764.1X175		
	4.20	0.1654	120	175	A9764.2X175		
	4.30	0.1693	125	185	A9764.3X185		
	4.40	0.1732	125	185	A9764.4X185		
	4.50	0.1772	125	185	A9764.5X185		
	4.50	0.1772	160	235		A9774.5X235	
	4.50	0.1772	200	295			A9784.5X295
	4.60	0.1811	125	185	A9764.6X185		
	4.70	0.1850	125	185	A9764.7X185		
3/16	4.76	0.1874	135	195	A9763/16		
3/16	4.76	0.1874	170	245		A9773/16	
	4.80	0.1890	135	195	A9764.8X195		
	4.90	0.1929	135	195	A9764.9X195		
	5.00	0.1969	135	195	A9765.0X195		
	5.00	0.1969	170	245		A9775.0X245	
	5.00	0.1969	210	315			A9785.0X315
	5.10	0.2008	135	195	A9765.1X195		
	5.20	0.2047	135	195	A9765.2X195		
	5.30	0.2087	135	195	A9765.3X195		
	5.40	0.2126	140	205	A9765.4X205		
	5.50	0.2165	140	205	A9765.5X205		
	5.50	0.2165	180	260		A9775.5X260	
	5.50	0.2165	225	330			A9785.5X330
	5.60	0.2205	140	205	A9765.6X205		
	5.70	0.2244	140	205	A9765.7X205		
	5.80	0.2283	140	205	A9765.8X205		
	5.90	0.2323	140	205	A9765.9X205		
	6.00	0.2362	140	205	A9766.0X205		
	6.00	0.2362	180	260		A9776.0X260	
	6.00	0.2362	225	330			A9786.0X330
	6.10	0.2402	150	215	A9766.1X215		
	6.20	0.2441	150	215	A9766.2X215		
	6.30	0.2480	150	215	A9766.3X215		
1/4	6.35	0.2500	150	215	A9761/4		
1/4	6.35	0.2500	190	275		A9771/4	
1/4	6.35	0.2500	235	350			A9781/4
	6.40	0.2520	150	215	A9766.4X215		
	6.50	0.2559	150	215	A9766.5X215		
	6.50	0.2559	190	275		A9776.5X275	
	6.50	0.2559	235	350			A9786.5X350
	6.60	0.2598	150	215	A9766.6X215		
	6.70	0.2638	150	215	A9766.7X215		
	6.80	0.2677	155	225	A9766.8X225		
	6.90	0.2717	155	225	A9766.9X225		
	7.00	0.2756	155	225	A9767.0X225		
	7.00	0.2756	200	290		A9777.0X290	
	7.00	0.2756	250	370			A9787.0X370
	7.50	0.2953	155	225	A9767.5X225		
	7.50	0.2953	200	290		A9777.5X290	
	7.50	0.2953	250	370			A9787.5X370
5/16	7.94	0.3126	165	240	A9765/16		
	8.00	0.3150	165	240	A9768.0X240		
	8.00	0.3150	210	305		A9778.0X305	
	8.00	0.3150	265	390			A9788.0X390
	8.50	0.3346	165	240	A9768.5X240		

d_1 Øh_8 Inch	d_1 Øh_8 mm	d_1 decimal Inch	l_2 mm	l_1 mm	A976	A977	A978
	8.50	0.3346	210	305		A9778.5X305	
	8.50	0.3346	265	390			A9788.5X390
11/32	8.73	0.3437	175	250	A97611/32		
11/32	8.73	0.3437	220	320		A97711/32	
	9.00	0.3543	175	250	A9769.0X250		
	9.00	0.3543	220	320		A9779.0X320	
	9.00	0.3543	280	410			A9789.0X410
	9.50	0.3740	175	250	A9769.5X250		
	9.50	0.3740	220	320		A9779.5X320	
	9.50	0.3740	280	410			A9789.5X410
3/8	9.52	0.3748	185	265	A9763/8		
	10.00	0.3937	185	265	A97610.0X265		
	10.00	0.3937	235	340		A97710.0X340	
	10.00	0.3937	295	430			A97810.0X430
	10.50	0.4134	185	265	A97610.5		
	10.50	0.4134	235	340		A97710.5	
	11.00	0.4331	195	280	A97611.0		
	11.00	0.4331	250	365		A97711.0	
7/16	11.11	0.4374	195	280	A9767/16		
	11.50	0.4528	195	280	A97611.5		
	11.50	0.4528	250	365		A97711.5	
	12.00	0.4724	205	295	A97612.0		
	12.00	0.4724	260	375		A97712.0	
	12.50	0.4921	205	295	A97612.5		
	12.50	0.4921	260	375		A97712.5	
1/2	12.70	0.5000	205	295	A9761/2		
	13.00	0.5118	205	295	A97613.0		
	13.00	0.5118	260	375		A97713.0	
	14.00	0.5512	215	310	A97614.0 [4]		
	14.00	0.5512	270	390		A97714.0 [4]	

[4] 多马公司标准 / Padrão Dormer / Norma Dormer / Dormer Standard

A130
A530

- 锥柄钻头
- Broca de Haste Cônica
- Broca de mango cónico
- Taper Shank Drill

大于 14.0 mm 作心厚减薄
Acima de 14.0 mm - Ponta adelgaçada
Por encima de 14,0 mm - Punta adelgazada
Above 14.0mm - Point Thinned

A730

- 锥柄钻头
- Broca de Haste Cônica
- Broca de mango cónico
- Taper Shank Drill

A130	▪	1.1 1.2 1.3 1.4 3.1 3.2
	•	1.5 1.6 2.1 2.2 2.3 3.3 3.4 4.1 4.2 4.3 5.1 5.2 5.3 6.1 6.2 6.3 6.4 7.1 7.2 7.3 7.4 8.1 8.2 8.3 9.1
A530	▪	1.1 1.2 1.3 1.4 3.2 3.3 6.3
	•	1.5 1.6 2.1 2.2 2.3 3.1 3.4 4.1 4.2 4.3 5.1 5.2 5.3 6.1 6.2 6.4 7.1 7.2 7.3 7.4 8.1 8.2 8.3 9.1
A730	▪	1.5 1.6 2.2 2.3 3.4
	•	1.1 1.2 1.3 1.4 2.1 3.1 3.2 3.3 4.1 4.2 4.3 5.1 5.2 5.3 6.1 6.2 6.3 6.4 7.1 7.2 7.3 7.4 8.1 8.2 8.3 9.1

A130	HSS	DIN 345	4XD	118°	ST		N		
A530	HSS	DIN 345	4XD	118°	TiN		N		
A730	HSS-E	DIN 345	4XD	118°	Bronze		N		

A130	A530	A730
		
2.00 - 100.00	8.50 - 40.00	10.00 - 32.00

d_1 Øh_8 Inch	d_1 Øh_8 mm	d_1 decimal Inch	l_2 mm	l_1 mm	MK	A130	A530	A730
	2.00	0.0787	24	105	1	A1302.0		
	2.50	0.0984	30	111	1	A1302.5		
	3.00	0.1181	33	114	1	A1303.0		
1/8	3.18	0.1252	36	117	1	A1301/8		
	3.20	0.1260	36	117	1	A1303.2		
	3.25	0.1280	36	117	1	A1303.25		
	3.30	0.1299	36	117	1	A1303.3		
	3.50	0.1378	39	120	1	A1303.5		
9/64	3.57	0.1406	39	120	1	A1309/64		
	3.75	0.1476	39	120	1	A1303.75		
5/32	3.97	0.1563	43	124	1	A1305/32		
	4.00	0.1575	43	124	1	A1304.0		

d_1 Øh_8 Inch	d_1 Øh_8 mm	d_1 decimal Inch	l_2 mm	l_1 mm	MK	A130	A530	A730
	4.10	0.1614	43	124	1	A1304.1		
	4.20	0.1654	43	124	1	A1304.2		
	4.25	0.1673	43	124	1	A1304.25		
11/64	4.37	0.1720	47	128	1	A13011/64		
	4.50	0.1772	47	128	1	A1304.5		
	4.75	0.1870	52	128	1	A1304.75		
3/16	4.76	0.1874	52	133	1	A1303/16		
	4.80	0.1890	52	133	1	A1304.8		
	4.90	0.1929	52	133	1	A1304.9		
	5.00	0.1969	52	133	1	A1305.0		
	5.10	0.2008	52	133	1	A1305.1		
13/64	5.16	0.2031	52	133	1	A13013/64		
	5.20	0.2047	52	133	1	A1305.2		
	5.25	0.2067	52	133	1	A1305.25		
	5.40	0.2126	57	138	1	A1305.4		
	5.50	0.2165	57	138	1	A1305.5		
7/32	5.56	0.2189	57	138	1	A1307/32		
	5.70	0.2244	57	138	1	A1305.7		
	5.75	0.2264	57	138	1	A1305.75		
	5.80	0.2283	57	138	1	A1305.8		
	5.90	0.2323	57	138	1	A1305.9		
15/64	5.95	0.2343	57	138	1	A13015/64		
	6.00	0.2362	57	138	1	A1306.0		
	6.10	0.2402	63	144	1	A1306.1		
	6.20	0.2441	63	144	1	A1306.2		
	6.25	0.2461	63	144	1	A1306.25		
	6.30	0.2480	63	144	1	A1306.3		
1/4	6.35	0.2500	63	144	1	A1301/4		
	6.40	0.2520	63	144	1	A1306.4		
	6.50	0.2559	63	144	1	A1306.5		
	6.60	0.2598	63	144	1	A1306.6		
	6.70	0.2638	63	144	1	A1306.7		
17/64	6.75	0.2657	69	150	1	A13017/64		
	6.75	0.2657	69	150	1	A1306.75		
	6.80	0.2677	69	150	1	A1306.8		
	6.90	0.2717	69	150	1	A1306.9		
	7.00	0.2756	69	150	1	A1307.0		
9/32	7.14	0.2811	69	150	1	A1309/32		
	7.20	0.2835	69	150	1	A1307.2		
	7.25	0.2854	69	150	1	A1307.25		
	7.30	0.2874	69	150	1	A1307.3		
	7.40	0.2913	69	150	1	A1307.4		
	7.50	0.2953	69	150	1	A1307.5		
19/64	7.54	0.2969	75	156	1	A13019/64		
	7.70	0.3031	75	156	1	A1307.7		
	7.75	0.3051	75	156	1	A1307.75		
	7.80	0.3071	75	156	1	A1307.8		
	7.90	0.3110	75	156	1	A1307.9		
5/16	7.94	0.3126	75	156	1	A1305/16		
	8.00	0.3150	75	156	1	A1308.0		
	8.10	0.3189	75	156	1	A1308.1		
	8.20	0.3228	75	156	1	A1308.2		
	8.25	0.3248	75	156	1	A1308.25		
	8.30	0.3268	75	156	1	A1308.3		
21/64	8.33	0.3280	75	156	1	A13021/64		
	8.40	0.3307	75	156	1	A1308.4		
	8.50	0.3346	75	156	1	A1308.5	A5308.5	
	8.60	0.3386	81	162	1	A1308.6		
	8.70	0.3425	81	162	1	A1308.7		
11/32	8.73	0.3437	81	162	1	A13011/32		
	8.75	0.3445	81	162	1	A1308.75		
	8.80	0.3465	81	162	1	A1308.8		
	8.90	0.3504	81	162	1	A1308.9		
	9.00	0.3543	81	162	1	A1309.0	A5309.0	
	9.10	0.3583	81	162	1	A1309.1		
23/64	9.13	0.3594	81	162	1	A13023/64		
	9.20	0.3622	81	162	1	A1309.2		
	9.25	0.3642	81	162	1	A1309.25		
	9.30	0.3661	81	162	1	A1309.3		
	9.50	0.3740	81	162	1	A1309.5		

d_1 Øh_8 Inch	d_1 Øh_8 mm	d_1 decimal Inch	l_2 mm	l_1 mm	MK	A130	A530	A730
3/8	9.52	0.3748	87	168	1	A1303/8		
	9.60	0.3780	87	168	1	A1309.6		
	9.70	0.3819	87	168	1	A1309.7		
	9.75	0.3839	87	168	1	A1309.75		
	9.80	0.3858	87	168	1	A1309.8		
	9.90	0.3898	87	168	1	A1309.9		
25/64	9.92	0.3906	87	168	1	A13025/64		
	10.00	0.3937	87	168	1	A13010.0	A53010.0	A73010.0
	10.10	0.3976	87	168	1	A13010.1		
	10.20	0.4016	87	168	1	A13010.2	A53010.2	A73010.2
	10.25	0.4035	87	168	1	A13010.25		
	10.30	0.4055	87	168	1	A13010.3		
13/32	10.32	0.4063	87	168	1	A13013/32		
	10.50	0.4134	87	168	1	A13010.5	A53010.5	A73010.5
27/64	10.72	0.4220	94	175	1	A13027/64		
	10.75	0.4232	94	175	1	A13010.75		
	10.80	0.4252	94	175	1	A13010.8		A73010.8
	10.90	0.4291	94	175	1	A13010.9		
	11.00	0.4331	94	175	1	A13011.0	A53011.0	A73011.0
	11.10	0.4370	94	175	1	A13011.1		
7/16	11.11	0.4374	94	175	1	A1307/16		
	11.20	0.4409	94	175	1	A13011.2		
	11.25	0.4429	94	175	1	A13011.25		
	11.30	0.4449	94	175	1	A13011.3		
	11.40	0.4488	94	175	1	A13011.4		
	11.50	0.4528	94	175	1	A13011.5	A53011.5	A73011.5
29/64	11.51	0.4531	94	175	1	A13029/64		
	11.60	0.4567	94	175	1	A13011.6		
	11.70	0.4606	94	175	1	A13011.7		
	11.75	0.4626	94	175	1	A13011.75	A53011.75	
	11.80	0.4646	94	175	1	A13011.8		A73011.8
	11.90	0.4685	101	182	1	A13011.9		
15/32	11.91	0.4689	101	182	1	A13015/32		
	12.00	0.4724	101	182	1	A13012.0	A53012.0	A73012.0
	12.10	0.4764	101	182	1	A13012.1		
	12.20	0.4803	101	182	1	A13012.2		A73012.2
	12.25	0.4823	101	182	1	A13012.25		
	12.30	0.4843	101	182	1	A13012.3		
31/64	12.30	0.4843	101	182	1	A13031/64		
	12.40	0.4882	101	182	1	A13012.4		
	12.50	0.4921	101	182	1	A13012.5	A53012.5	A73012.5
	12.60	0.4961	101	182	1	A13012.6		
	12.70	0.5000	101	182	1	A13012.7		
1/2	12.70	0.5000	101	182	1	A1301/2		
	12.75	0.5020	101	182	1	A13012.75		
	12.80	0.5039	101	182	1	A13012.8		A73012.8
	12.90	0.5079	101	182	1	A13012.9		
	13.00	0.5118	101	182	1	A13013.0	A53013.0	A73013.0
33/64	13.10	0.5157	101	182	1	A13033/64		
	13.20	0.5197	101	182	1	A13013.2		
	13.25	0.5217	108	189	1	A13013.25		
17/32	13.49	0.5311	108	189	1	A13017/32		
	13.50	0.5315	108	189	1	A13013.5	A53013.5	A73013.5
	13.60	0.5354	108	189	1	A13013.6		
	13.70	0.5394	108	189	1	A13013.7		
	13.75	0.5413	108	189	1	A13013.75		
	13.80	0.5433	108	189	1	A13013.8		A73013.8
35/64	13.89	0.5469	108	189	1	A13035/64		
	13.90	0.5472	108	189	1	A13013.9		
	14.00	0.5512	108	189	1	A13014.0	A53014.0	A73014.0
	14.10	0.5551	114	212	2	A13014.1		
	14.20	0.5591	114	212	2	A13014.2		
	14.25	0.5610	114	212	2	A13014.25		A73014.25
9/16	14.29	0.5626	114	212	2	A1309/16		
	14.30	0.5630	114	212	2	A13014.3		
	14.40	0.5669	114	212	2	A13014.4		
	14.50	0.5709	114	212	2	A13014.5	A53014.5	A73014.5
	14.60	0.5748	114	212	2	A13014.6		
37/64	14.68	0.5780	114	212	2	A13037/64		
	14.70	0.5787	114	212	2	A13014.7		

DORMER

d_1 Øh_8 Inch	d_1 Øh_8 mm	d_1 decimal Inch	l_2 mm	l_1 mm	MK	A130	A530	A730
	14.75	0.5807	114	212	2	A13014.75		A73014.75
	14.80	0.5827	114	212	2	A13014.8		
	14.90	0.5866	114	212	2	A13014.9		
	15.00	0.5906	114	212	2	A13015.0	A53015.0	A73015.0
19/32	15.08	0.5937	120	218	2	A13019/32		
	15.10	0.5945	120	218	2	A13015.1		
	15.20	0.5984	120	218	2	A13015.2		
	15.25	0.6004	120	218	2	A13015.25	A53015.25	A73015.25
39/64	15.48	0.6094	120	218	2	A13039/64		
	15.50	0.6102	120	218	2	A13015.5	A53015.5	A73015.5
	15.70	0.6181	120	218	2	A13015.7		
	15.75	0.6201	120	218	2	A13015.75		A73015.75
	15.80	0.6220	120	218	2	A13015.8		
5/8	15.88	0.6252	120	218	2	A1305/8		
	15.90	0.6260	120	218	2	A13015.9		
	16.00	0.6299	120	218	2	A13016.0	A53016.0	A73016.0
	16.10	0.6339	125	223	2	A13016.1		
	16.20	0.6378	125	223	2	A13016.2		
	16.25	0.6398	120	218	2			A73016.25
	16.25	0.6398	125	223	2	A13016.25		
41/64	16.27	0.6406	125	223	2	A13041/64		
	16.50	0.6496	125	223	2	A13016.5	A53016.5	A73016.5
21/32	16.67	0.6563	125	223	2	A13021/32		
	16.75	0.6594	125	223	2	A13016.75		
	17.00	0.6693	125	223	2	A13017.0	A53017.0	A73017.0
43/64	17.07	0.6720	130	228	2	A13043/64		
	17.25	0.6791	130	228	2	A13017.25		A73017.25
11/16	17.46	0.6874	130	228	2	A13011/16		
	17.50	0.6890	130	228	2	A13017.5	A53017.5	A73017.5
	17.75	0.6988	130	228	2	A13017.75		A73017.75
45/64	17.86	0.7031	130	228	2	A13045/64		
	18.00	0.7087	130	228	2	A13018.0	A53018.0	A73018.0
	18.25	0.7185	135	233	2	A13018.25		A73018.25
23/32	18.26	0.7189	135	233	2	A13023/32		
	18.50	0.7283	135	233	2	A13018.5	A53018.5	A73018.5
47/64	18.65	0.7343	135	233	2	A13047/64		
	18.75	0.7382	135	233	2	A13018.75		A73018.75
	19.00	0.7480	135	233	2	A13019.0	A53019.0	A73019.0
3/4	19.05	0.7500	140	238	2	A1303/4		
	19.25	0.7579	140	238	2	A13019.25		A73019.25
49/64	19.45	0.7657	140	238	2	A13049/64		
	19.50	0.7677	140	238	2	A13019.5	A53019.5	A73019.5
	19.75	0.7776	140	238	2	A13019.75		A73019.75
25/32	19.84	0.7811	140	238	2	A13025/32		
	20.00	0.7874	140	238	2	A13020.0	A53020.0	A73020.0
51/64	20.24	0.7969	145	243	2	A13051/64		
	20.25	0.7972	145	243	2	A13020.25		A73020.25
	20.40	0.8031	145	243	2	A13020.4		
	20.50	0.8071	145	243	2	A13020.5	A53020.5	A73020.5
13/16	20.64	0.8126	145	243	2	A13013/16		
	20.75	0.8169	145	243	2	A13020.75		A73020.75
	21.00	0.8268	145	243	2	A13021.0	A53021.0	A73021.0
53/64	21.03	0.8280	145	243	2	A13053/64		
	21.25	0.8366	150	248	2	A13021.25		
27/32	21.43	0.8437	150	248	2	A13027/32		
	21.50	0.8465	150	248	2	A13021.5	A53021.5	A73021.5
	21.75	0.8563	150	248	2	A13021.75		
55/64	21.83	0.8594	150	248	2	A13055/64		
	22.00	0.8661	150	248	2	A13022.0	A53022.0	A73022.0
7/8	22.22	0.8748	150	248	2	A1307/8		
	22.25	0.8760	150	248	2	A13022.25		
	22.50	0.8858	155	253	2	A13022.5	A53022.5	A73022.5
57/64	22.62	0.8906	155	253	2	A13057/64		
	22.75	0.8957	155	253	2	A13022.75		
	23.00	0.9055	155	253	2	A13023.0	A53023.0	A73023.0
29/32	23.02	0.9063	155	253	2	A13029/32		
	23.25	0.9154	155	276	3	A13023.25		
59/64	23.42	0.9220	155	276	3	A13059/64		
	23.50	0.9252	155	276	3	A13023.5	A53023.5	A73023.5
	23.75	0.9350	160	281	3	A13023.75		

d_1 Øh_8 Inch	d_1 Øh_8 mm	d_1 decimal Inch	l_2 mm	l_1 mm	MK	A130	A530	A730
15/16	23.81	0.9374	160	281	3	A13015/16		
	24.00	0.9449	160	281	3	A13024.0	A53024.0	A73024.0
61/64	24.21	0.9531	160	281	3	A13061/64		
	24.25	0.9547	160	281	3	A13024.25		
	24.50	0.9646	160	281	3	A13024.5	A53024.5	A73024.5
31/32	24.61	0.9689	160	281	3	A13031/32		
	24.75	0.9744	160	281	3	A13024.75		
	25.00	0.9843	160	281	3	A13025.0	A53025.0	A73025.0
63/64	25.00	0.9843	160	286	3	A13063/64		
	25.25	0.9941	165	286	3	A13025.25		
1“	25.40	1.0000	165	286	3	A1301		
	25.50	1.0039	165	286	3	A13025.5	A53025.5	A73025.5
	25.75	1.0138	165	286	3	A13025.75		
	26.00	1.0236	165	286	3	A13026.0	A53026.0	A73026.0
	26.25	1.0335	165	286	3	A13026.25		
	26.50	1.0433	165	286	3	A13026.5	A53026.5	A73026.5
	26.75	1.0531	170	291	3	A13026.75		
1.1/16	26.99	1.0626	170	291	3	A1301.1/16		
	27.00	1.0630	170	291	3	A13027.0	A53027.0	A73027.0
	27.25	1.0728	170	291	3	A13027.25		
	27.50	1.0827	170	291	3	A13027.5	A53027.5	A73027.5
	27.75	1.0925	170	291	3	A13027.75		
	28.00	1.1024	170	291	3	A13028.0	A53028.0	A73028.0
	28.25	1.1122	175	296	3	A13028.25		
	28.50	1.1220	175	296	3	A13028.5	A53028.5	A73028.5
1.1/8	28.58	1.1252	175	296	3	A1301.1/8		
	28.75	1.1319	175	296	3	A13028.75		
	29.00	1.1417	175	296	3	A13029.0	A53029.0	A73029.0
	29.25	1.1516	175	296	3	A13029.25		
1.5/32	29.37	1.1563	175	296	3	A1301.5/32		
	29.50	1.1614	175	296	3	A13029.5	A53029.5	
	29.75	1.1713	175	296	3	A13029.75		
	30.00	1.1811	175	296	3	A13030.0	A53030.0	A73030.0
1.3/16	30.16	1.1874	180	301	3	A1301.3/16		
	30.25	1.1909	180	301	3	A13030.25		
	30.50	1.2008	180	301	3	A13030.5		
	30.75	1.2106	180	301	3	A13030.75		
1.7/32	30.96	1.2189	180	301	3	A1301.7/32		
	31.00	1.2205	180	301	3	A13031.0	A53031.0	A73031.0
	31.25	1.2303	180	301	3	A13031.25		
	31.50	1.2402	180	301	3	A13031.5		
	31.75	1.2500	185	306	3	A13031.75		
1.1/4	31.75	1.2500	185	306	3	A1301.1/4		
	32.00	1.2598	185	334	4	A13032.0	A53032.0	A73032.0
	32.50	1.2795	185	334	4	A13032.5		
1.9/32	32.54	1.2811	185	334	4	A1301.9/32		
	33.00	1.2992	185	334	4	A13033.0	A53033.0	
1.5/16	33.34	1.3126	185	334	4	A1301.5/16		
	33.50	1.3189	185	334	4	A13033.5		
	34.00	1.3386	190	339	4	A13034.0		
1.11/32	34.13	1.3437	190	339	4	A1301.11/32		
	34.50	1.3583	190	339	4	A13034.5		
1.3/8	34.93	1.3752	190	339	4	A1301.3/8		
	35.00	1.3780	190	339	4	A13035.0	A53035.0	
	35.50	1.3976	190	339	4	A13035.5		
1.13/32	35.72	1.4063	195	344	4	A1301.13/32		
	36.00	1.4173	195	344	4	A13036.0		
	36.50	1.4370	195	344	4	A13036.5		
1.7/16	36.51	1.4374	195	344	4	A1301.7/16		
	37.00	1.4567	195	344	4	A13037.0		
	37.50	1.4764	195	344	4	A13037.5		
	38.00	1.4961	200	349	4	A13038.0		
1.1/2	38.10	1.5000	200	349	4	A1301.1/2		
	38.50	1.5157	200	349	4	A13038.5		
	39.00	1.5354	200	349	4	A13039.0		
	39.50	1.5551	200	349	4	A13039.5		
1.9/16	39.69	1.5626	200	349	4	A1301.9/16		
	40.00	1.5748	200	349	4	A13040.0	A53040.0	
	40.50	1.5945	205	354	4	A13040.5		
	41.00	1.6142	205	354	4	A13041.0		

d_1 Øh_8 Inch	d_1 Øh_8 mm	d_1 decimal Inch	l_2 mm	l_1 mm	MK	A130	A530	A730
1.5/8	41.28	1.6252	205	354	4	A1301.5/8		
	41.50	1.6339	205	354	4	A13041.5		
	42.00	1.6535	205	354	4	A13042.0		
	42.50	1.6732	205	354	4	A13042.5		
1.11/16	42.86	1.6874	210	359	4	A1301.11/16		
	43.00	1.6929	210	359	4	A13043.0		
	43.50	1.7126	210	359	4	A13043.5		
	44.00	1.7323	210	359	4	A13044.0		
1.3/4	44.45	1.7500	210	359	4	A1301.3/4		
	44.50	1.7520	210	359	4	A13044.5		
	45.00	1.7717	210	359	4	A13045.0		
	45.50	1.7913	215	364	4	A13045.5		
	46.00	1.8110	215	364	4	A13046.0		
	46.50	1.8307	215	364	4	A13046.5		
	47.00	1.8504	215	364	4	A13047.0		
	47.50	1.8701	215	364	4	A13047.5		
	48.00	1.8898	220	369	4	A13048.0		
	48.50	1.9094	220	369	4	A13048.5		
	49.00	1.9291	220	369	4	A13049.0		
	49.50	1.9488	220	369	4	A13049.5		
	50.00	1.9685	220	369	4	A13050.0		
2“	50.80	2.0000	225	374	4	A1302		
	51.00	2.0079	225	412	5	A13051.0		
	52.00	2.0472	225	412	5	A13052.0		
	53.00	2.0866	225	412	5	A13053.0		
	54.00	2.1260	230	417	5	A13054.0		
	55.00	2.1654	230	417	5	A13055.0		
	56.00	2.2047	230	417	5	A13056.0		
	57.00	2.2441	235	422	5	A13057.0		
	58.00	2.2835	235	422	5	A13058.0		
	59.00	2.3228	235	422	5	A13059.0		
	60.00	2.3622	235	422	5	A13060.0		
	61.00	2.4016	240	427	5	A13061.0		
	62.00	2.4409	240	427	5	A13062.0		
	63.00	2.4803	240	427	5	A13063.0		
2.1/2	63.50	2.5000	245	432	5	A1302.1/2		
	64.00	2.5197	245	432	5	A13064.0		
	65.00	2.5591	245	432	5	A13065.0		
	66.00	2.5984	245	432	5	A13066.0		
2.5/8	66.68	2.6252	245	432	5	A1302.5/8		
	67.00	2.6378	245	432	5	A13067.0		
	68.00	2.6772	250	437	5	A13068.0		
	69.00	2.7165	250	437	5	A13069.0		
2.3/4	69.85	2.7500	250	437	5	A1302.3/4		
	70.00	2.7559	250	437	5	A13070.0		
	71.00	2.7953	250	437	5	A13071.0		
	72.00	2.8346	255	442	5	A13072.0		
	73.00	2.8740	255	442	5	A13073.0		
2.7/8	73.03	2.8752	255	442	5	A1302.7/8		
	74.00	2.9134	255	442	5	A13074.0		
	75.00	2.9528	255	442	5	A13075.0		
	76.00	2.9921	260	447	5	A13076.0		
3“	76.20	3.0000	260	447	5	A1303		
	77.00	3.0315	260	514	6	A13077.0		
	78.00	3.0709	260	514	6	A13078.0		
	79.00	3.1102	260	514	6	A13079.0		
	80.00	3.1496	260	514	6	A13080.0		
	81.00	3.1890	265	519	6	A13081.0		
	84.00	3.3071	265	519	6	A13084.0		
	85.00	3.3465	265	519	6	A13085.0		
	90.00	3.5433	270	524	6	A13090.0		
	95.00	3.7402	275	529	6	A13095.0		
	100.00	3.9370	280	534	6	A130100.0		

A166

- 四后面型钻尖的焊接硬质合金式锥柄钻头
- Broca de Haste Cônica com afiação em cruz e ponta de metal duro
- Broca mango cónico 4 caras con punta soldada de metal duro
- Taper Shank Drill with 4 facet ground Brazed Carbide Tip

A166 ▪ 3.1 3.2 3.3 3.4

• 1.1 1.2 1.3 1.4 1.5 1.6 2.1 2.2 2.3 4.1 4.2 4.3 5.1 5.2 5.3 6.1 6.2 6.3 6.4 7.1 7.2 7.3 7.4 8.2 9.1

A166 HSS HM | DIN 345 | 4XD | 118° | ST | N

A166

10.00 - 33.00

d_1 Øh8 mm	d_1 decimal Inch	l_2 mm	l_1 mm	MK	A166
10.00	0.3937	87	168	1	A16610.0
10.50	0.4134	87	168	1	A16610.5
11.00	0.4331	94	175	1	A16611.0
11.50	0.4528	94	175	1	A16611.5
12.00	0.4724	101	182	1	A16612.0
13.00	0.5118	101	182	1	A16613.0
13.50	0.5315	108	189	1	A16613.5
14.00	0.5512	108	189	1	A16614.0
15.00	0.5906	114	212	2	A16615.0
16.00	0.6299	120	218	2	A16616.0
17.00	0.6693	125	223	2	A16617.0
17.50	0.6890	130	228	2	A16617.5
18.00	0.7087	130	228	2	A16618.0
19.00	0.7480	135	233	2	A16619.0
20.00	0.7874	140	238	2	A16620.0
21.00	0.8268	145	243	2	A16621.0
22.00	0.8661	150	248	2	A16622.0
22.50	0.8858	155	253	2	A16622.5
23.00	0.9055	155	253	2	A16623.0
24.00	0.9449	160	281	3	A16624.0
25.00	0.9843	160	281	3	A16625.0
26.00	1.0236	165	286	3	A16626.0
27.00	1.0630	170	291	3	A16627.0
28.00	1.1024	170	291	3	A16628.0
29.00	1.1417	175	296	3	A16629.0
30.00	1.1811	175	296	3	A16630.0
32.00	1.2598	185	334	4	A16632.0
33.00	1.2992	185	334	4	A16633.0

DORMER

A350

- 长系列锥柄钻
- Broca de Haste Cônica Série Longa
- Broca de mango cónico, serie larga
- Long Series Tapershank Drill

A350		
	■	1.1 1.2
	•	1.3 1.4 1.5 1.6 2.1 2.2 2.3 3.1 3.2 3.3 3.4 4.1 4.2 4.3 5.1 5.2 5.3 6.1 6.2 6.3 6.4 7.1 7.2 7.3 7.4 8.1 8.2 8.3 9.1

A350 HSS DIN 341 6XD 118° ST N

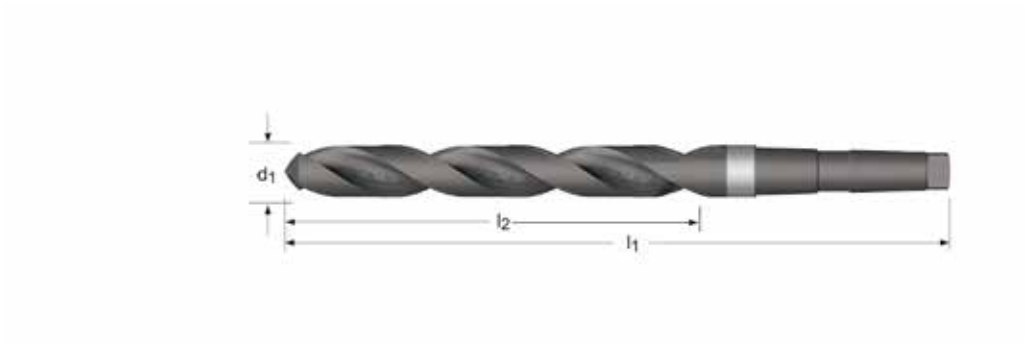

A350

5.00 - 50.00

d_1 Øh8 mm	d_1 decimal Inch	l_2 mm	l_1 mm	MK	A350
5.00	0.1969	74	155	1	A3505.0
5.50	0.2165	80	161	1	A3505.5
6.00	0.2362	80	161	1	A3506.0
6.70	0.2638	86	167	1	A3506.7
6.80	0.2677	93	174	1	A3506.8
7.00	0.2756	93	174	1	A3507.0
7.50	0.2953	93	174	1	A3507.5
8.00	0.3150	100	181	1	A3508.0
8.40	0.3307	100	181	1	A3508.4
8.50	0.3346	100	181	1	A3508.5
8.75	0.3445	107	188	1	A3508.75
9.00	0.3543	107	188	1	A3509.0
9.50	0.3740	107	188	1	A3509.5
9.80	0.3858	116	197	1	A3509.8
10.00	0.3937	116	197	1	A35010.0
10.20	0.4016	116	197	1	A35010.2
10.50	0.4134	116	197	1	A35010.5
10.70	0.4213	125	206	1	A35010.7
11.00	0.4331	125	206	1	A35011.0
11.50	0.4528	125	206	1	A35011.5
11.75	0.4626	125	206	1	A35011.75
11.80	0.4646	125	206	1	A35011.8
12.00	0.4724	134	215	1	A35012.0
12.50	0.4921	134	215	1	A35012.5
13.00	0.5118	134	215	1	A35013.0
13.50	0.5315	142	223	1	A35013.5
14.00	0.5512	142	223	1	A35014.0
14.25	0.5610	147	245	2	A35014.25
14.50	0.5709	147	245	2	A35014.5
14.75	0.5807	147	245	2	A35014.75
15.00	0.5906	147	245	2	A35015.0
15.25	0.6004	153	251	2	A35015.25
15.50	0.6102	153	251	2	A35015.5
15.75	0.6201	153	251	2	A35015.75

d_1 Øh_8 mm	d_1 decimal Inch	l_2 mm	l_1 mm	MK	A350
16.00	0.6299	153	251	2	A35016.0
16.25	0.6398	159	257	2	A35016.25
16.50	0.6496	159	257	2	A35016.5
16.75	0.6594	159	257	2	A35016.75
17.00	0.6693	159	257	2	A35017.0
17.25	0.6791	165	263	2	A35017.25
17.50	0.6890	165	263	2	A35017.5
18.00	0.7087	165	263	2	A35018.0
18.50	0.7283	171	269	2	A35018.5
19.00	0.7480	171	269	2	A35019.0
19.50	0.7677	177	275	2	A35019.5
19.75	0.7776	177	275	2	A35019.75
20.00	0.7874	177	275	2	A35020.0
20.25	0.7972	184	282	2	A35020.25
20.50	0.8071	184	282	2	A35020.5
21.00	0.8268	184	282	2	A35021.0
21.50	0.8465	191	289	2	A35021.5
22.00	0.8661	191	289	2	A35022.0
22.50	0.8858	198	296	2	A35022.5
23.00	0.9055	198	296	2	A35023.0
23.50	0.9252	198	319	3	A35023.5
24.00	0.9449	206	327	3	A35024.0
24.50	0.9646	206	327	3	A35024.5
25.00	0.9843	206	327	3	A35025.0
25.50	1.0039	214	335	3	A35025.5
26.00	1.0236	214	335	3	A35026.0
26.50	1.0433	214	335	3	A35026.5
27.00	1.0630	222	343	3	A35027.0
27.50	1.0827	222	343	3	A35027.5
28.00	1.1024	222	343	3	A35028.0
29.00	1.1417	230	351	3	A35029.0
30.00	1.1811	230	351	3	A35030.0
30.50	1.2008	239	360	3	A35030.5
31.00	1.2205	239	360	3	A35031.0
31.50	1.2402	239	360	3	A35031.5
32.00	1.2598	248	397	4	A35032.0
33.00	1.2992	248	397	4	A35033.0
34.00	1.3386	257	406	4	A35034.0
35.00	1.3780	257	406	4	A35035.0
36.00	1.4173	267	416	4	A35036.0
37.00	1.4567	267	416	4	A35037.0
38.00	1.4961	277	426	4	A35038.0
39.00	1.5354	277	426	4	A35039.0
40.00	1.5748	277	426	4	A35040.0
41.00	1.6142	287	436	4	A35041.0
42.00	1.6535	287	436	4	A35042.0
43.00	1.6929	298	447	4	A35043.0
44.00	1.7323	298	447	4	A35044.0
45.00	1.7717	298	447	4	A35045.0
46.00	1.8110	310	459	4	A35046.0
47.00	1.8504	310	459	4	A35047.0
48.00	1.8898	321	470	4	A35048.0
50.00	1.9685	321	470	4	A35050.0

A345

- 莫氏锥柄 超长钻头
- Broca de Haste Cônica Série Extra Longa
- Broca de mango cónico serie extra larga
- Morse Taper Shank Extra Length Drill

A345

▪ 1.1 1.2

• 1.3 1.4 1.5 1.6 2.1 2.2 2.3 3.1 3.2 3.3 3.4 4.1 4.2 4.3 5.1 5.2 5.3 6.1 6.2 6.3 6.4 7.1 7.2 7.3 7.4 8.1 8.2 8.3 9.1

A345 HSS | DIN 1870/1 | 10XD | 118° | ST | N

A345

8.00 - 50.00

d_1 Øh_8 Inch	d_1 Øh_8 mm	d_1 decimal Inch	l_2 mm	l_1 mm	MK	A345
	8.00	0.3150	165	265	1	A3458.0
	8.50	0.3346	165	265	1	A3458.5
	9.00	0.3543	175	275	1	A3459.0
	9.50	0.3740	175	275	1	A3459.5
3/8	9.52	0.3748	185	285	1	A3453/8
	10.00	0.3937	185	285	1	A34510.0
13/32	10.32	0.4063	185	285	1	A34513/32
	10.50	0.4134	185	285	1	A34510.5
	11.00	0.4331	195	300	1	A34511.0
7/16	11.11	0.4374	195	300	1	A3457/16
	11.50	0.4528	195	300	1	A34511.5
29/64	11.51	0.4531	205	310	1	A34529/64
	12.00	0.4724	205	310	1	A34512.0
	12.50	0.4921	205	310	1	A34512.5
1/2	12.70	0.5000	205	310	1	A3451/2
	13.00	0.5118	205	310	1	A34513.0
17/32	13.49	0.5311	220	325	1	A34517/32
	13.50	0.5315	220	325	1	A34513.5
	14.00	0.5512	220	325	1	A34514.0
9/16	14.29	0.5626	220	340	2	A3459/16
37/64	14.68	0.5780	220	340	2	A34537/64
	15.00	0.5906	220	340	2	A34515.0
39/64	15.48	0.6094	230	355	2	A34539/64
	15.50	0.6102	230	355	2	A34515.5
5/8	15.88	0.6252	230	355	2	A3455/8
	16.00	0.6299	230	355	2	A34516.0
41/64	16.27	0.6406	230	355	2	A34541/64
	16.50	0.6496	230	355	2	A34516.5
21/32	16.67	0.6563	230	355	2	A34521/32
	17.00	0.6693	230	355	2	A34517.0
11/16	17.46	0.6874	245	370	2	A34511/16
	17.50	0.6890	245	370	2	A34517.5

d_1 Øh_8 Inch	d_1 Øh_8 mm	d_1 decimal Inch	l_2 mm	l_1 mm	MK	A345
	18.00	0.7087	245	370	2	A34518.0
	18.50	0.7283	245	370	2	A34518.5
	19.00	0.7480	245	370	2	A34519.0
3/4	19.05	0.7500	260	385	2	A3453/4
	19.50	0.7677	260	385	2	A34519.5
	20.00	0.7874	260	385	2	A34520.0
	20.50	0.8071	260	385	2	A34520.5
	21.00	0.8268	260	385	2	A34521.0
	21.50	0.8465	270	405	2	A34521.5
	22.00	0.8661	270	405	2	A34522.0
7/8	22.22	0.8748	270	405	2	A3457/8
	22.50	0.8858	270	405	3	A34522.5
	23.00	0.9055	270	405	3	A34523.0
	23.50	0.9252	270	425	3	A34523.5
	24.00	0.9449	290	440	3	A34524.0
	24.50	0.9646	290	440	3	A34524.5
	25.00	0.9843	290	440	3	A34525.0
1“	25.40	1.0000	290	440	3	A3451 [3]
	25.50	1.0039	290	440	3	A34525.5 [3]
	26.00	1.0236	290	440	3	A34526.0 [3]
	26.50	1.0433	290	440	3	A34526.5 [3]
	27.00	1.0630	305	460	3	A34527.0 [3]
	28.00	1.1024	305	460	3	A34528.0 [3]
	29.00	1.1417	305	460	3	A34529.0 [3]
	30.00	1.1811	305	460	3	A34530.0 [3]
1.1/4	31.75	1.2500	320	480	3	A3451.1/4 [3]
	31.00	1.2205	320	480	3	A34531.0 [3]
	32.00	1.2598	320	505	4	A34532.0 [3]
	33.00	1.2992	320	505	4	A34533.0 [3]
	34.00	1.3386	340	530	4	A34534.0 [3]
	35.00	1.3780	340	530	4	A34535.0 [3]
	36.00	1.4173	340	530	4	A34536.0 [3]
	37.00	1.4567	340	530	4	A34537.0 [3]
	38.00	1.4961	360	555	4	A34538.0 [3]
1.1/2	38.10	1.5000	360	555	4	A3451.1/2 [3]
	39.00	1.5354	360	555	4	A34539.0 [3]
	40.00	1.5748	360	555	4	A34540.0 [3]
	41.00	1.6142	360	555	4	A34541.0 [3]
	42.00	1.6535	360	555	4	A34542.0 [3]
1.3/4	44.45	1.7500	385	585	4	A3451.3/4 [3]
	45.00	1.7717	385	585	4	A34545.0 [3]
	48.00	1.8898	405	605	4	A34548.0 [3]
	50.00	1.9685	405	605	4	A34550.0 [3]

[3] 最大加工10xD / < 10xD

A951
A952

- 莫氏锥柄 超长钻头
- Broca de Haste Cônica Série Extra Longa
- Broca de mango cónico serie extra larga
- Morse Taper Shank Extra Length Drill

A951; A952

▪ 1.1 1.2 1.3

• 1.4 1.5 1.6 2.1 2.2 2.3 3.1 3.2 3.3 3.4 4.1 4.2 4.3 5.1 5.2 5.3 6.1 6.2 6.3 6.4 7.1 7.2 7.3 7.4 8.1 8.2 8.3 9.1

A951 HSS DIN 1870/1 15XD 130° ST W

A952 HSS DIN 1870/2 20XD 130° ST W

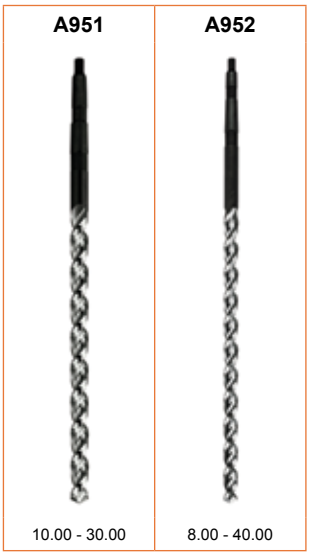

d_1 Øh8 mm	d_1 decimal Inch	l_2 mm	l_1 mm	MK	A951	A952
8.00	0.3150	210	330	1		A9528.0
8.50	0.3346	210	330	1		A9528.5
9.00	0.3543	220	345	1		A9529.0
10.00	0.3937	185	285	1	A95110.0	
10.00	0.3937	235	360	1		A95210.0
10.50	0.4134	235	360	1		A95210.5
11.00	0.4331	195	300	1	A95111.0	
11.00	0.4331	250	375	1		A95211.0
11.50	0.4528	250	375	1		A95211.5
12.00	0.4724	205	310	1	A95112.0	
12.00	0.4724	260	395	1		A95212.0
12.50	0.4921	205	310	1	A95112.5	
12.50	0.4921	260	395	1		A95212.5
13.00	0.5118	205	310	1	A95113.0	
13.00	0.5118	260	395	1		A95213.0
13.50	0.5315	220	325	1	A95113.5	
13.50	0.5315	275	410	1		A95213.5
14.00	0.5512	220	325	1	A95114.0	
14.00	0.5512	275	410	1		A95214.0
14.50	0.5709	220	340	2	A95114.5 [5]	
14.50	0.5709	275	425	2		A95214.5 [6]
15.00	0.5906	220	340	2	A95115.0 [5]	
15.00	0.5906	275	425	2		A95215.0 [6]
15.50	0.6102	230	355	2	A95115.5 [5]	
15.50	0.6102	295	445	2		A95215.5 [6]
16.00	0.6299	230	355	2	A95116.0 [5]	
16.00	0.6299	295	445	2		A95216.0 [6]
16.50	0.6496	230	355	2	A95116.5 [5]	

[5] 最大加工 15xD / < 15xD
[6] 最大加工 20xD / < 20xD

d_1 Øh$_8$ mm	d_1 decimal Inch	l_2 mm	l_1 mm	MK	A951	A952
16.50	0.6496	295	445	2		A95216.5 [6]
17.00	0.6693	230	355	2	A95117.0 [5]	
17.00	0.6693	295	445	2		A95217.0 [6]
17.50	0.6890	245	370	2	A95117.5 [5]	
17.50	0.6890	310	465	2		A95217.5 [6]
18.00	0.7087	245	370	2	A95118.0 [5]	
18.00	0.7087	310	465	2		A95218.0 [6]
18.50	0.7283	245	370	2	A95118.5 [5]	
18.50	0.7283	310	465	2		A95218.5 [6]
19.00	0.7480	245	370	2	A95119.0 [5]	
19.00	0.7480	310	465	2		A95219.0 [6]
19.50	0.7677	260	385	2	A95119.5 [5]	
19.50	0.7677	325	490	2		A95219.5 [6]
20.00	0.7874	260	385	2	A95120.0 [5]	
20.00	0.7874	325	490	2		A95220.0 [6]
21.00	0.8268	260	385	2	A95121.0 [5]	
21.00	0.8268	325	490	2		A95221.0 [6]
22.00	0.8661	270	405	2	A95122.0 [5]	
22.00	0.8661	345	515	2		A95222.0 [6]
23.00	0.9055	270	405	2	A95123.0 [5]	
23.00	0.9055	345	515	2		A95223.0 [6]
24.00	0.9449	290	440	3	A95124.0 [5]	
24.00	0.9449	365	555	3		A95224.0 [6]
25.00	0.9843	290	440	3	A95125.0 [5]	
25.00	0.9843	365	555	3		A95225.0 [6]
26.00	1.0236	290	440	3	A95126.0 [5]	
26.00	1.0236	365	555	3		A95226.0 [6]
27.00	1.0630	305	460	3	A95127.0 [5]	
27.00	1.0630	385	580	3		A95227.0 [6]
28.00	1.1024	305	460	3	A95128.0 [5]	
28.00	1.1024	385	580	3		A95228.0 [6]
29.00	1.1417	305	460	3	A95129.0 [5]	
29.00	1.1417	385	580	3		A95229.0 [6]
30.00	1.1811	305	460	3	A95130.0 [5]	
30.00	1.1811	385	580	3		A95230.0 [6]
31.00	1.2205	410	610	3		A95231.0 [6]
32.00	1.2598	410	635	4		A95232.0 [6]
33.00	1.2992	410	635	4		A95233.0 [6]
34.00	1.3386	430	665	4		A95234.0 [6]
35.00	1.3780	430	665	4		A95235.0 [6]
38.00	1.4961	460	695	4		A95238.0 [6]
40.00	1.5748	460	695	4		A95240.0 [6]

[5] 最大加工 15xD / < 15xD
[6] 最大加工 20xD / < 20xD

A400

- 直柄阶梯钻 - 90°
- Broca Escalonada - 90°
- Broca Bidiametral - 90°
- Subland Drill - 90°

A400		
	■	1.1 1.2 1.3 1.4 3.1 3.2
	•	1.5 1.6 2.1 2.2 2.3 3.3 3.4 4.1 4.2 4.3 5.1 5.2 5.3 6.1 6.2 6.3 6.4 7.1 7.2 7.3 7.4 8.1

A400 HSS DIN 8374 4XD 118° ST N 90°

A400

M3 - M10

M	d_1 Ø mm	d_1 decimal Inch	l_2 mm	l_1 mm	l_3 mm	d_2 Ø mm	A400
M3	3.20	0.1260	57	93	9	6	A400M3
M4	4.30	0.1693	75	117	11	8	A400M4
M5	5.30	0.2087	87	133	13	10	A400M5
M6	6.40	0.2520	94	142	15	11.5	A400M6
M8	8.40	0.3307	114	169	19	15	A400M8
M10	10.50	0.4134	135	198	23	19	A400M10

A402

- 直柄阶梯钻 - 180°
- Broca Escalonada - 180°
- Broca Bidiametral - 180°
- Subland Drill - 180°

A402		
	▪	1.1 1.2 1.3 1.4 3.1 3.2
	•	1.5 1.6 2.1 2.2 2.3 3.3 3.4 4.1 4.2 4.3 5.1 5.2 5.3 6.1 6.2 6.3 6.4 7.1 7.2 7.3 7.4 8.1

A402

A402

M3 - M10

M	d_1 Ø mm	d_1 decimal Inch	l_2 mm	l_1 mm	l_3 mm	d_2 Ø mm	A402
M3	3.40	0.1339	57	93	9	6	A402M3
M4	4.50	0.1772	75	117	11	8	A402M4
M5	5.50	0.2165	87	133	13	10	A402M5
M6	6.60	0.2598	94	142	15	11	A402M6
M8	9.00	0.3543	114	169	19	15	A402M8
M10	11.00	0.4331	130	191	23	18	A402M10

A405

- 莫氏柄阶梯钻 - 180°
- Broca Escalonada de Haste Cônica - 180°
- Broca Bidiametral de mango cónico - 180°
- Morse Taper Shank Subland Drill - 180°

A405		
	▪	1.1 1.2 1.3 1.4 3.1 3.2
	•	1.5 1.6 2.1 2.2 2.3 3.3 3.4 4.1 4.2 4.3 5.1 5.2 5.3 6.1 6.2 6.3 6.4 7.1 7.2 7.3 7.4 8.1

A405 HSS DIN 8377 4XD 118° ST N 180°

A405

M6 - M18

M	d_1 Ø mm	d_1 decimal Inch	l_2 mm	l_1 mm	l_3 mm	d_2 Ø mm	MK	A405
M6	6.60	0.2598	94	175	15	11	1	A405M6
M8	9.00	0.3543	114	212	19	15	2	A405M8
M10	11.00	0.4331	130	228	23	18	2	A405M10
M12	13.50	0.5315	140	238	27	20	2	A405M12
M14	15.50	0.6102	160	281	31	24	3	A405M14
M16	17.50	0.6890	165	286	35	26	3	A405M16
M18	20.00	0.7874	175	296	39	30	3	A405M18

A412

- 阶梯钻
- Broca Escalonada
- Broca escalonada
- Step Drill

A412		
	▪	1.1 1.2 1.3 1.4 2.1 3.1 3.2
	•	1.5 1.6 2.2 2.3 3.3 3.4 4.1 4.2 4.3 5.1 5.2 5.3 6.1 6.2 6.3 6.4 7.1 7.2 7.3 7.4 8.1

A412 HSS DORMER 2.5XD 118° ST 90°

A412

M3 - M10

M	d_1 Ø mm	d_1 decimal Inch	l_2 mm	l_1 mm	l_3 mm	d_2 Ø mm	A412
M3	3.40	0.1339	31	70	9	6.6	A412M3
M4	4.50	0.1772	40	84	11	9	A412M4
M5	5.50	0.2165	47	95	13	11	A412M5
M6	6.60	0.2598	51	102	15	13	A412M6
M8	9.00	0.3543	62	123	19	17.2	A412M8
M10	11.00	0.4331	70	141	23	21.5	A412M10

A413

- 阶梯钻
- Broca Escalonada
- Broca escalonada
- Step Drill

A413		
	■	1.1 1.2 1.3 1.4 2.1 3.1 3.2
	•	1.5 1.6 2.2 2.3 3.3 3.4 4.1 4.2 4.3 5.1 5.2 5.3 6.1 6.2 6.3 6.4 7.1 7.2 7.3 7.4 8.1

A413 HSS DORMER 2.5XD 118° ST 180°

A413

M3 - M10

M	d_1 Ø mm	d_1 decimal Inch	l_2 mm	l_1 mm	l_3 mm	d_2 Ø mm	A413
M3	3.40	0.1339	28	66	9	6	A413M3
M4	4.50	0.1772	37	79	11	8	A413M4
M5	5.50	0.2165	43	89	13	10	A413M5
M6	6.60	0.2598	47	95	15	11	A413M6
M8	9.00	0.3543	56	111	19	15	A413M8
M10	11.00	0.4331	62	123	23	18	A413M10

A200 • 中心钻 - 60°
A205 • Broca de Centrar - 60°
A206 • Brocas de Centrar - 60°
A266 • Centre Drill - 60°

A200; A205; A206; A266

▪	1.1	1.2	1.3	1.4	3.1	3.2									
•	1.5	1.6	2.1	2.2	2.3	3.3	3.4	4.1	4.2	4.3	5.1	5.2	5.3	6.1	6.2
	6.3	6.4	7.1	7.2	7.3	7.4	8.1	8.2	8.3	9.1					

A200	HSS	DIN 333A	1XD	118°						60°	A296 136
A205	HSS	DIN 333A	1XD	118°	TiN					60°	
A206	HSS-E	DIN 333A	1XD	118°						60°	
A266	HSS-E	DIN 333A	1XD	118°	TiAlN					60°	

A200	A205	A206	A266
		NEW 	NEW 
0.50 - 12.50	1.00 - 5.00	1.00 - 5.00	1.00 - 5.00

d_1 Ø mm	d_1 decimal Inch	l_2 max/min mm	l_1 mm	d_2 Ø mm	A200	A205	A206	A266
0.50	0.0197	0.9 - 0.6	25	3.15	A200.5X3.15 [7]			
0.80	0.0315	1.3 - 1.0	25	3.15	A200.8X3.15 [7]			
1.00	0.0394	1.7 - 1.3	31	3.15	A2001.0X3.15	A2051.0X3.15	A2061.0X3.15	A2661.0X3.15
1.25	0.0492	2.0 - 1.6	31	3.15	A2001.25X3.15	A2051.25X3.15	A2061.25X3.15	A2661.25X3.15
1.60	0.0630	2.6 - 2.0	35	4.00	A2001.6X4.0	A2051.6X4.0	A2061.6X4.0	A2661.6X4.0
2.00	0.0787	3.1 - 2.5	40	5.00	A2002.0X5.0	A2052.0X5.0	A2062.0X5.0	A2662.0X5.0
2.50	0.0984	3.8 - 3.1	45	6.30	A2002.5X6.3	A2052.5X6.3	A2062.5X6.3	A2662.5X6.3
3.15	0.1240	4.6 - 3.9	50	8.00	A2003.15X8.0	A2053.15X8.0	A2063.15X8.0	A2663.15X8.0
4.00	0.1575	5.9 - 5.0	55	10.00	A2004.0X10.0	A2054.0X10.0	A2064.0X10.0	A2664.0X10.0
5.00	0.1969	7.2 - 6.3	63	12.50	A2005.0X12.5	A2055.0X12.5	A2065.0X12.5	A2665.0X12.5
6.30	0.2480	8.9 - 8.0	71	16.00	A2006.3X16.0			
8.00	0.3150	11.1 - 10.1	80	20.00	A2008.0X20.0			
10.00	0.3937	13.8 - 12.8	100	25.00	A20010.0X25.0			
12.50	0.4921	17.5 - 16.5	125	31.50	A20012.5X31.5			

[7] 只有单头的 / Única ponta / Afilada sólo por una punta / Single Ended Only

A210

- 中心钻
- Broca de Centrar
- Brocas de Centrar
- Centre Drill

圆弧形刀刃
Forma Radial
Radio protegido
Radius Form

A210																					
▪	1.1	1.2	1.3	1.4	3.1	3.2															
•	1.5	1.6	2.1	2.2	2.3	3.3	3.4	4.1	4.2	4.3	5.1	5.2	5.3	6.1	6.2	6.3	6.4	7.1	7.2	7.3	
	7.4	8.1	8.2	8.3	9.1																

A210 HSS DIN 333R 1XD 118°

A210

0.50 - 10.00

d_1 Ø mm	d_1 decimal Inch	l_2 max/min mm	l_1 mm	r max/min mm	d_2 Ø mm	A210
0.50	0.0197	2.6 - 2.3	25.0	2.50 - 2.00	3.15	A210.5X3.15 [7]
0.80	0.0315	2.9 - 2.6	25.0	3.15 - 2.50	3.15	A210.8X3.15 [7]
1.00	0.0394	3.3 - 3.0	31.0	3.65 - 2.90	3.15	A2101.0X3.15
1.25	0.0492	3.6 - 3.3	31.0	3.95 - 3.15	3.15	A2101.25X3.15
1.60	0.0630	4.7 - 4.2	35.0	5.00 - 4.00	4.00	A2101.6X4.0
2.00	0.0787	5.4 - 5.0	40.0	6.25 - 5.00	5.00	A2102.0X5.0
2.50	0.0984	6.8 - 6.3	45.0	7.88 - 6.30	6.30	A2102.5X6.3
3.15	0.1240	8.5 - 8.0	50.0	10.00 - 8.00	8.00	A2103.15X8.0
4.00	0.1575	10.6 - 10.0	55.0	12.50 - 10.00	10.00	A2104.0X10.0
5.00	0.1969	13.1 - 12.5	63.0	15.63 - 12.50	12.50	A2105.0X12.5
6.30	0.2480	16.6 - 16.0	71.0	20.00 - 16.00	16.00	A2106.3X16.0
8.00	0.3150	20.7 - 20.0	80.0	25.00 - 20.00	20.00	A2108.0X20.0
10.00	0.3937	25.7 - 25.0	100.0	31.25 - 25.00	25.00	A21010.0X25.0

[7] 只有单头的 / Única ponta / Afilada sólo por una punta / Single Ended Only

A201

- 中心钻 - 60°
- Broca de Centrar - 60°
- Brocas de Centrar - 60°
- Centre Drill - 60°

A201																					
▪	1.1	1.2	1.3	1.4	3.1	3.2															
•	1.5	1.6	2.1	2.2	2.3	3.3	3.4	4.1	4.2	4.3	5.1	5.2	5.3	6.1	6.2	6.3	6.4	7.1	7.2	7.3	
	7.4	8.1	8.2	8.3	9.1																

A201 HSS DORMER 1XD 122° 60°

A201

0.63 - 6.00

d_1 Ø mm	d_1 decimal Inch	l_2 max/min mm	l_1 mm	d_2 Ø mm	A201
0.63	0.0248	1.2 - 0.9	20	3.15	A201.63X3.15 [7]
0.75	0.0295	1.3 - 1.0	35	3.50	A201.75X3.5
1.00	0.0394	2.1 - 1.5	35	4.00	A2011.0X4.0
1.50	0.0591	2.8 - 2.0	40	5.00	A2011.5X5.0
1.60	0.0630	2.4 - 2.0	40	5.00	A2011.6X5.0
2.00	0.0787	4.0 - 3.0	45	6.00	A2012.0X6.0
2.00	0.0787	2.9 - 2.5	45	6.30	A2012.0X6.3
2.50	0.0984	4.5 - 3.5	50	8.00	A2012.5X8.0
3.00	0.1181	4.4 - 3.9	50	8.00	A2013.0X8.0
3.00	0.1181	5.0 - 4.0	56	10.00	A2013.0X10.0
3.15	0.1240	4.4 - 3.9	56	10.00	A2013.15X10.0
4.00	0.1575	6.2 - 5.0	66	12.00	A2014.0X12.0
5.00	0.1969	7.7 - 6.5	78	14.00	A2015.0X14.0
6.00	0.2362	9.2 - 8.0	90	18.00	A2016.0X18.0

[7] 只有单头的 / Única ponta / Afilada sólo por una punta / Single Ended Only

A225

- 中心钻 - 60°
- Broca de Centrar - 60°
- Brocas de Centrar - 60°
- Centre Drill - 60°

A225																					
▪	1.1	1.2	1.3	1.4	3.1	3.2															
•	1.5	1.6	2.1	2.2	2.3	3.3	3.4	4.1	4.2	4.3	5.1	5.2	5.3	6.1	6.2	6.3	6.4	7.1	7.2	7.3	
	7.4	8.1	8.2	8.3	9.1																

A225 HSS BS 328 1XD 120° 60° A296 136

A225

3/64 - 5/16

Nr.	d_1 Ø Inch	d_1 decimal Inch	l_2 max/min Inch	l_1 Inch	d_2 Ø Inch	A225
BS1	3/64	0.0469	5/64 - 1/16	1.1/2	1/8	A225BS1
BS2	1/16	0.0625	3/32 - 5/64	1.3/4	3/16	A225BS2
BS3	3/32	0.0938	5/32 - 1/8	2“	1/4	A225BS3
BS4	1/8	0.1250	3/16 - 5/32	2.1/4	5/16	A225BS4
BS5	3/16	0.1875	9/32 - 1/4	2.1/2	7/16	A225BS5
BS5A	7/32	0.2188	5/16 - 9/32	2.3/4	1/2	A225BS5A
BS6	1/4	0.2500	3/8 - 5/16	3“	5/8	A225BS6
BS7	5/16	0.3125	15/32 - 13/32	3.1/2	3/4	A225BS7

A237

- 中心钻 - 60°
- Broca de Centrar - 60°
- Brocas de Centrar - 60°
- Centre Drill - 60°

削平柄
Haste com uma face plana
Mango Plano
Flat Shank

A237																					
▪	1.1	1.2	1.3	1.4	3.1	3.2															
•	1.5	1.6	2.1	2.2	2.3	3.3	3.4	4.1	4.2	4.3	5.1	5.2	5.3	6.1	6.2	6.3	6.4	7.1	7.2	7.3	
	7.4	8.1	8.2	8.3	9.1																

A237 HSS-E | DIN 333A | 1XD | 118° | d_4 | 60°

A237

1.60 - 10.00

d_1 Ø mm	d_1 decimal Inch	l_2 max/min mm	l_1 mm	d_2 Ø mm	d4 max/min mm	A237
1.60	0.0630	2.6 - 2.0	35	4.00	3.25 - 3.15	A2371.6X4.0
2.00	0.0787	3.1 - 2.5	40	5.00	4.20 - 4.10	A2372.0X5.0
2.50	0.0984	3.8 - 3.1	45	6.30	5.35 - 5.25	A2372.5X6.3
3.15	0.1240	4.6 - 3.9	50	8.00	6.95- 6.85	A2373.15X8.0
4.00	0.1575	5.9 - 5.0	55	10.00	8.40 - 8.30	A2374.0X10.0
5.00	0.1969	7.2 - 6.3	63	12.50	10.95 - 10.85	A2375.0X12.5
6.30	0.2480	8.9 - 8.0	71	16.00	14.00 -13.90	A2376.3X16.0
8.00	0.3150	11.1 - 10.1	80	20.00	17.90 - 17.80	A2378.0X20.0
10.00	0.3937	13.8 - 12.8	100	25.00	22.50 -22.40	A23710.0X25.0

A238

- 中心钻
- Broca de Centro
- Brocas de Centrar
- Centre Drill

圆弧刃和削平柄
Forma radial e haste com uma face plana
Radio Protegido y Mango Plano
Radius Form and Flat Shank

A238																					
▪	1.1	1.2	1.3	1.4	3.1	3.2															
•	1.5	1.6	2.1	2.2	2.3	3.3	3.4	4.1	4.2	4.3	5.1	5.2	5.3	6.1	6.2	6.3	6.4	7.1	7.2	7.3	
	7.4	8.1	8.2	8.3	9.1																

A238 HSS-E DIN 333R 1XD 118°

A238

1.60 - 8.00

d_1 Ø mm	d_1 decimal Inch	l_2 max/min mm	l_1 mm	r max/min mm	d_2 Ø mm	d4 max/min mm	A238
1.60	0.0630	4.7 - 4.2	35	5.00 - 4.00	4.00	3.25 - 3.15	A2381.6X4.0
2.00	0.0787	5.4 - 5.0	40	6.25 - 5.00	5.00	4.20 - 4.10	A2382.0X5.0
2.50	0.0984	6.8 - 6.3	45	7.88 - 6.30	6.30	5.35 - 5.25	A2382.5X6.3
3.15	0.1240	8.5 - 8.0	50	10.00 - 8.00	8.00	6.95 - 6.85	A2383.15X8.0
4.00	0.1575	10.6 - 10.0	55	12.50 - 10.00	10.00	8.40 - 8.30	A2384.0X10.0
5.00	0.1969	13.1 - 12.5	63	15.63 - 12.50	12.50	10.95 - 10.85	A2385.0X12.5
6.30	0.2480	16.6 - 16.0	71	20.00 - 16.00	16.00	14.00 - 13.90	A2386.3X16.0
8.00	0.3150	20.7 - 20.0	80	25.00 - 20.00	20.00	17.90 - 17.80	A2388.0X20.0

A242

- 中心钻 - 60°
- Broca de Centrar - 60°
- Brocas de Centrar - 60°
- Centre Drill - 60°

A242																					
▪	1.1	1.2	1.3	1.4	3.1	3.2															
•	1.5	1.6	2.1	2.2	2.3	3.3	3.4	4.1	4.2	4.3	5.1	5.2	5.3	6.1	6.2	6.3	6.4	7.1	7.2	7.3	
	7.4	8.1	8.2	8.3	9.1																

A242 HSS-E DORMER 1XD 118° 60°

A242

1.00 - 5.00

d_1 Ø mm	d_1 decimal Inch	l_2 max/min mm	l_1 mm	d_2 Ø mm	A242
1.00	0.0394	1.7 - 1.3	100	4.00	A2421.0X4.0
1.50	0.0591	2.6 - 2.0	100	5.00	A2421.5X5.0
2.00	0.0787	3.1 - 2.5	100	6.00	A2422.0X6.0
2.50	0.0984	3.8 - 3.1	100	8.00	A2422.5X8.0
3.00	0.1181	4.6 - 3.9	100	8.00	A2423.0X8.0
3.00	0.1181	4.6 - 3.9	100	10.00	A2423.0X10.0
4.00	0.1575	5.9 - 5.0	100	10.00	A2424.0X10.0
4.00	0.1575	5.9 - 5.0	100	12.00	A2424.0X12.0
5.00	0.1969	7.2 - 6.3	100	12.00	A2425.0X12.0

A088

- 套装短型钻头
- Jogo de Broca Série Curta
- Juego de Brocas, serie Extra-corta
- Stub Drill Set

A=套件中的型号, B=套件中的数量, C=套件中的直径
A=Tipos no jogo B=No. no jogo C=Diâmetros no jogo
A=Tipos en el juego, B=No. en el Juego, C=Diámetros en el Juego
A=Styles in Set, B=No. in Set, C=Diameters in Set

A088

Set

Set	A	B	C	A088
200S	A022	24	1.0 mm - 10.5 mm x 0.5 mm + 3.3 mm, 4.2 mm, 6.8 mm, 10.2 mm	A088200S

A095

- 套装普通长度钻头
- Jogo de Brocas Série Normal
- Juego de Brocas, serie corta
- Jobber Drill Set

A=套件中的型号, B=套件中的数量, C=套件中的直径
A=Tipos no jogo B=No. no jogo C=Diâmetros no jogo
A=Tipos en el juego, B=No. en el Juego, C=Diámetros en el Juego
A=Styles in Set, B=No. in Set, C=Diameters in Set

A095

Set

Set	A	B	C	A095
18	A002	29	1/16 inch - 1/2 inch x 1/64 inch	A09518
20	A002	15	1/16 inch - 1/2 inch x 1/32 inch	A09520
200	A002	24	1.0 mm - 10.5 mm x 0.5 mm + 3.3 mm, 4.2 mm, 6.8 mm, 10.2 mm	A095200
201	A002	19	1.0 mm - 10.0 mm x 0.5 mm	A095201
202	A002	51	1.0 mm - 6.0 mm x 0.1 mm	A095202
203	A002	41	6.0 mm - 10.0 mm x 0.1 mm	A095203
204	A002	25	1.0 mm - 13.0 mm x 0.5 mm	A095204
206	A002	29	1.0 mm - 13.0 mm x 0.5 mm + 3.3 mm, 4.2 mm, 6.8 mm, 10.2 mm	A095206
209	A002	91	1.0 mm - 10.0 mm x 0.1 mm	A095209

A087

- 套装钻头
- Jogo de Brocas Compacto
- Juego de Brocas Compacto
- Compact Drill Set

A=套件中的型号, B=套件中的数量, C=套件中的直径
A=Tipos no jogo B=No. no jogo C=Diâmetros no jogo
A=Tipos en el juego, B=No. en el Juego, C=Diámetros en el Juego
A=Styles in Set, B=No. in Set, C=Diameters in Set

Nr.	A	B	C	A087
201	A002	19	1.0 mm - 10.0 mm x 0.5 mm	A087201

A094

- 普通长度钻头套装
- Jogo de Brocas Série Normal
- Juego de Brocas, serie corta
- Jobber Drill Set

A=套件中的型号, B=套件中的数量, C=套件中的直径
A=Tipos no jogo B=No. no jogo C=Diâmetros no jogo
A=Tipos en el juego, B=No. en el Juego, C=Diámetros en el Juego
A=Styles in Set, B=No. in Set, C=Diameters in Set

A094

Set

Set	A	B	C	A094
413	A002	13	1.5 mm - 6.5 mm x 0.5 mm + 3.3 mm, 4.2 mm	A094413
419	A002	19	1.0 mm - 10.0 mm x 0.5 mm	A094419

A089

- 普通长度钻头套装
- Jogo de Brocas Série Normal
- Juego de Brocas, serie corta
- Jobber Drill Set

A=套件中的型号, B=套件中的数量, C=套件中的直径
A=Tipos no jogo B=No. no jogo C=Diâmetros no jogo
A=Tipos en el juego, B=No. en el Juego, C=Diámetros en el Juego
A=Styles in Set, B=No. in Set, C=Diameters in Set

A089

NEW

Set

Nr.	A	B	C	A089
10	A002	5	A0024.0, A0025.0, A0026.0, A0028.0, A00210.0	A08910

A099

- 成套展示钻头 — A=套件中的型号, B=套件中的数量, C=套件中的直径
- Display de Brocas — A=Tipos no jogo B=No. no jogo C=Diâmetros no jogo
- Expositor de Brocas — A=Tipos en el juego, B=No. en el Juego, C=Diámetros en el Juego
- Counter Dispenser — A=Styles in Set, B=No. in Set, C=Diameters in Set

A099

Set

Set	A	B	C	A099
F1	A002	380	5 x (13/32, 7/16, 15/32, 1/2) inch; 10 x (5/64, 7/64, 9/64, 11/64, 13/64, 15/64, 17/64, 9/32, 19/64, 5/16, 21/64, 11/32, 23/64, 3/8) inch; 20 x (1/16, 7/32, 1/4) inch; 30 x 3/32 inch; 40 x (5/32, 3/16) inch; 50 x 1/8 inch	A099F1
M1	A002	340	5 x (10.50, 11.00, 11.50, 12.00, 12.50, 13.00) mm; 10 x (1.50, 2.50, 3.50, 4.50, 5.50, 6.50, 7.00, 7.50, 8.00, 8.50, 9.00, 9.50, 10.00) mm; 20 x (1.00, 5.00, 6.00) mm; 30 x 2.00 mm; 40 x 4.00 mm; 50 x 3.00 mm	A099M1

A099DRILLBOY

Set

Set	A	B	C	A099
DRILLBOY	A002	43	3 x (3.0 mm, 3.3 mm, 3.5 mm, 4.0 mm) 2 x (4.2 mm, 4.5 mm, 5.0 mm, 5.5 mm, 6.0 mm, 6.5 mm, 6.8 mm, 7.0 mm, 7.5 mm, 8.0 mm) + 8.5 mm, 9.0 mm, 9.5 mm, 10.0 mm, 10.2 mm, 10.5 mm, 11.0 mm, 11.5 mm, 12.0 mm, 12.5 mm, 13.0 mm	A099DRILLBOY

A199

- 成套展示钻头
- Display de Brocas
- Counter Dispenser
- Counter Dispenser

A=套件中的型号, B=套件中的数量, C=套件中的直径
A=Tipos no jogo B=No. no jogo C=Diâmetros no jogo
A=Styles in Set, B=No. in Set, C=Diameters in Set
A=Styles in Set, B=No. in Set, C=Diameters in Set

A199

Set

Set	A	B	C	A199
F1	A100	380	5 x (13/32, 7/16, 15/32, 1/2) inch; 10 x (5/64, 7/64, 9/64, 11/64, 13/64, 15/64, 17/64, 9/32, 19/64, 5/16, 21/64, 11/32, 23/64, 3/8) inch; 20 x (1/16, 7/32, 1/4) inch; 30 x 3/32 inch; 40 x (5/32, 3/16) inch; 50 x 1/8 inch	A199F1
M1	A100	340	5 x (10.50, 11.00, 11.50, 12.00, 12.50, 13.00) mm; 10 x (1.50, 2.50, 3.50, 4.50, 5.50, 6.50, 7.00, 7.50, 8.00, 8.50, 9.00, 9.50, 10.00) mm; 20 x (1.00, 5.00, 6.00) mm; 30 x 2.00 mm; 40 x 4.00 mm; 50 x 3.00 mm	A199M1

A080

- 成套展示钻头
- Display de Brocas
- Expositor de Brocas
- Counter Dispenser

分配器已空
Dispenser vazio
Empty Dispenser
Empty Dispenser

Nr.	d Ø mm	A080 Set **A080**
M1EMPTY	(1.00, 1.50, 2.00, 2.50, 3.00, 3.50, 4.00, 4.50, 5.00, 5.50, 6.00, 6.50, 7.00, 7.50, 8.00, 8.50, 9.00, 9.50, 10.00, 10.50, 11.00, 11.50, 12.00) mm	A080M1EMPTY
F1EMPTY	(1/16, 5/64, 3/32, 7/64, 1/8, 9/64, 5/32, 11/64, 3/16, 13/64, 7/32, 15/64, 1/4, 17/64, 9/32, 19/64, 5/16, 21/64, 11/32, 3/8, 13/32, 7/16, 1/2) inch	A080F1EMPTY

A190

- 普通长度钻头套装
- Jogo de Brocas Série Normal
- Juego de Brocas, serie corta
- Jobber Drill Set

A=套件中的型号, B=套件中的数量, C=套件中的直径
A=Tipos no jogo B=No. no jogo C=Diâmetros no jogo
A=Tipos en el juego, B=No. en el Juego, C=Diámetros en el Juego
A=Styles in Set, B=No. in Set, C=Diameters in Set

A190

Set

Set	A	B	C	A190
3	A100	21	1/16 inch - 3/8 inch x 1/64 inch	A1903
12	A100	60	No.1 - No.60	A19012
18	A100	29	1/16 inch - 1/2 inch x 1/64 inch	A19018
20	A100	15	1/16 inch - 1/2 inch x 1/32 inch	A19020
201	A100	19	1.0 mm - 10.0 mm x 0.5 mm	A190201
202	A100	51	1.0 mm - 6.0 mm x 0.1 mm	A190202
203	A100	41	6.0 mm - 10.0 mm x 0.1 mm	A190203
204	A100	25	1.0 mm - 13.0 mm x 0.5 mm	A190204
206	A100	29	1.0 mm - 13.0 mm x 0.5 mm + 3.3 mm, 4.2 mm, 6.8 mm, 10.2 mm	A190206
209	A100	91	1.0 mm - 10.0 mm x 0.1 mm	A190209 [8]

[8] A190209以2盒装出售：第1盒（1.0-5.9 x 0.1 mm）+ 第2盒（6.0-10.0 x 0.1 mm） / O A190209 é vendido em 2 caixas: caixa 1 (1,0-5,9 x 0,1mm) + caixa 2 (6,0-10,0 x 0,1mm) / A190209 is sold in 2 boxes: box1 (1.0-5.9 x 0.1mm) + box2 (6.0-10.0 x 0.1mm) / Sold in 2 boxes: box 1 contains sizes (1.0-5.9 x 0.1mm); box 2 contains sizes (6.0-10.0 x 0.1mm)

A191

- 普通长度钻头套装 — 小于1.0 mm, 3/46”,和 N60 为光亮, A=套件中的型号, B=套件中的数量, C=套件中的直径
- Jogo de Brocas Série Normal — Brilhante abaixo de 1,0mm, 3/64’’ A=Tipos no jogo B=No. no jogo C=Diâmetros no jogo
- Juego de Brocas, serie corta — Brillante por debajo de 1,0mm,3/64”, N60.A=Tipos en el juego, B=No.Brocas en el Juego, C=Diámetros en el Juego
- Jobber Drill Set — Bright below 1.0mm, 3/64”, N60. A=Styles in Set, B=No. in Set, C=Diameters in Set

A191

Set

Set	A	B	C	A191
31M	A100	20	0.3 mm - 1.0 mm x 0.05 mm + 0.38 mm, 0.52 mm, 0.58 mm, 0.78 mm, 0.82 mm	A19131M
61-80	A100	20	No.61 - No. 80	A19161-80
413	A100	13	1.5 mm - 6.5 mm x 0.5 mm + 3.3 mm, 4.2 mm	A191413
419	A100	19	1.0 mm - 10.0 mm x 0.5 mm	A191419

A188

- 套装普通长度钻头
- Jogo de Brocas Série Normal
- Juego de Brocas, serie corta
- Jobber Drill Set

A=套件中的型号, B=套件中的数量, C=套件中的直径
A=Tipos no jogo, B=No. no jogo C=Diâmetros no jogo
A=Tipos en el juego, B=No. en el Juego, C=Diámetros en el Juego
A=Styles in Set, B=No. in Set, C=Diameters in Set

Nr.	A	B	C	A188
201	A108	19	1.0 mm - 10.0 mm x 0.5 mm	A188201
204	A108	25	1.0 mm - 13.0 mm x 0.5 mm	A188204

A295

- 套装普通长度钻头
- Jogo de Brocas Série Normal
- Juego de Brocas, serie corta
- Jobber Drill Set

不大于 1.4 mm 为 4 后面钻尖, A=套件中的型号, B=套件中的数量, C=套件中的直径

Afiação em cruz a partir de 1,4mm, A=Tipos no jogo B=No. no Jogo C=Diâmetros no jogo

Punta de 4 caras hasta 1.4 mm. A=Tipos en el juego, B=No. en el Juego, C=Diámetros en el Juego

4 Facet Point up to 1.4mm. A=Styles in Set, B=No. in Set, C=Diameters in Set

A295

Set

Set	A	B	C	A295
219	A777	19	1.0 mm - 10.0 mm x 0.5 mm	A295219
225	A777	25	1.0 mm - 13.0 mm x 0.5 mm	A295225

A296

- 中心钻套装
- Jogo de Brocas de Centrar
- Juego de Brocas de Centrar
- Centre Drill Set

A296200 - 118° 顶角, DIN333A; A296225 - 120° 顶角, BS328. A=套件中的型号, B=套件中的数量, C=套件中的直径

A296200 - ponta 118° DIN333A, A296225 - ponta 120° BS328
A=Tipos no jogo B=No. no Jogo C=Diâmetros no jogo

A296200 - 118° DIN333A, A296225 - 120° BS328. A=Tipos en el juego, B=No. en el Juego, C=Diámetros en el Juego

A296200 - 118° point DIN333A, A296225 - 120° point BS328. A=Styles in Set, B=No. in Set, C=Diameters in Set

A296

Set

Nr.	A	B	C	A296
200	A200	5	1.00 mm, 2.00 mm, 2.50 mm, 3.15 mm, 4.00 mm	A296200
225	A225	5	BS1, BS2, BS3, BS4, BS5	A296225

137 - 194

DORMER

材料	Material	Material	Material
涂层	Tratamento	Tratamiento superficial	Coating
标准	Norma	Estándar	Standard
加工方向	Direção	Dirección	Direction
柄部	Haste	Mango	Shank
槽型	Tipo de Canal	Tipo de Canal	Flute Style
公差	Tolerância	Tolerancia	Tolerance
锥度	Escala de conicidade	Escala de conicidad	Taper gradient
■ 性能卓越	Excelente para a Aplicação	Excelente para Aplicación	Excellent for Application
● 性能良好	Bom para a Aplicação	Bueno para Aplicación	Good for Application
实例 10 = 外缘处的切削速度，米/分，+/- 10%	Exemplo 10 = Velocidade periférica em metros/minuto +/- 10%	Ejemplo 10 = Velocidad Periférica en metros/minuto +/- 10%	Example 10 = Peripheral speed in metres/minute +/- 10%
产品型号	Código	Código de producto	Product Codes
尺寸范围	Gama de medidas	Rango de Diámetros	Size Range

AMG	中文	Português	Español	English
1.1	铁磁性低碳钢	Aço macio magnético	Acero blando	Magnetic soft steel
1.2	结构钢, 表面渗碳钢	Aço estrutural, Aço cementado	Acero de construcción/cementación	Structural steel, case carburizing steel
1.3	普通碳钢	Aço-carbono	Acero al carbono	Plain Carbon steel
1.4	合金钢	Aço de liga	Acero aleado	Alloy steel
1.5	合金钢, 淬火回火钢	Aço de liga, Aço temperado	Acero aleado/temple y revenido	Alloy steel, Hardened and tempered steel
1.6	合金钢, 淬火回火钢	Aço de liga, Aço temperado	Acero aleado/temple y revenido	Alloy steel, Hardened and tempered steel
1.7	热处理合金钢	Aço de liga temperado	Acero aleado cementado	Alloy steel, Heat treated
1.8	淬火合金钢, 耐磨钢	Aço de liga temperado	Acero aleado cementado	Alloy steel, Hardened & Wear resistant steel
2.1	易切削不锈钢	Aço inoxidável de maquinagem fácil	Acero inoxidable fácil mecanizado	Free machining, Stainless Steel
2.2	奥氏体不锈钢	Austenítico	Austenítico	Austenitic
2.3	铁素体 + 奥氏体, 马氏体不锈钢	Ferrítico + Austenítico + Martensítico	Ferritico, Ferr. + Aust., Marten	Ferritic + Austenitic, Ferritic, Martensitic
2.4	沉淀硬化不锈钢	Aço inoxidável de fácil usinagem	Acero Inoxidable Templado	Precipitation Hardened
3.1	灰铸铁	Grafite laminar	Con grafito laminar	Lamellar graphite
3.2	灰铸铁	Grafite laminar	Con grafito laminar	Lamellar graphite
3.3	球墨铸铁, 可锻铸铁	Grafite nodular/ Ferro fundido maleável	Con graf. laminar, fundic. maleable	Nodular graphite, Malleable Cast Iron
3.4	球墨铸铁, 可锻铸铁	Grafite nodular/ Ferro fundido maleável	Con graf. laminar, fundic. maleable	Nodular graphite, Malleable Cast Iron
4.1	纯钛	Titânio, sem liga	Titanio no aleado	Titanium, unalloyed
4.2	钛合金	Titânio, com liga	Titanio aleado	Titanium, alloyed
4.3	钛合金	Titânio, com liga	Titanio aleado	Titanium, alloyed
5.1	纯镍	Níquel, sem liga	Níquel no aleado	Nickel, unalloyed
5.2	镍合金	Níquel, com liga	Níquel aleado	Nickel, alloyed
5.3	镍合金	Níquel, com liga	Níquel aleado	Nickel, alloyed
6.1	紫铜	Cobre	Cobre	Copper
6.2	β黄铜, 青铜	Latão beta, bronze	β-Latón, bronce	β-Brass, Bronze
6.3	α黄铜	Latão alfa	α-Latón	α-Brass
6.4	高强度青铜	Bronze de alta resistência	Metal AMPCO	High Strength Bronze
7.1	纯铝, 纯镁	Al, Mg, sem liga	Al, Mg, no aleado	Al, Mg, unalloyed
7.2	铝合金, 硅含量 < 0.5%	Al com liga, Si<0.5%	Al aleado con Si < 0.5%	Al alloyed, Si < 0.5%
7.3	铝合金, 硅含量 > 0.5% < 10%	Al com liga, Si>0.5%<10%	Al aleado con Si > 0.5% < 10%	Al alloyed, Si > 0.5% < 10%
7.4	铝合金, 硅含量 > 10% 晶须增强铝合金, 镁合金	Al com liga, Si>10% reforçadas com monocristais filiformes, ligas de Al/Mg	Al aleado, Si>10% Reforzado por filamentos, Al-aleados, Mg-aleados	Al alloyed, Si > 10% Whisker reinforced Al-alloys Mg-alloys
8.1	调整字体大小, 适应排版需要	Termoplásticos	Termoplásticos	Thermoplastics
8.2	热固性塑料	Plásticos termoduros	Plásticos endurecidos por calor	Thermosetting plastics
8.3	增强塑料	Materiais plásticos reforçados	Materiales plásticos reforzados	Reinforced plastic materials
9.1	金属陶瓷	Cerametal (metalocerâmica)	Cerametales (metales-cerámicas)	Cermets (metals-ceramics)
10.1	标准石墨	Grafite standard	Grafito standard	Graphite

	HM	HM	HM	HM	HM	HSS	HSS	HSS	HSS-E	HSS	HSS	HSS	HSS	HSS-E	HSS-E	HSS-E	HSS-E
						ST			ST	ST	ST		ST Bronze				
	DIN 8093	DIN 8093	DIN 8050	DIN 8094	DIN 8051	DIN 206	DORMER	DORMER	BS 328	BS 328	DIN 9	DIN 9	ANSI	DIN 2179	DIN 212	DIN 212	DIN 212
		DIN 6535HA													DIN 6535HA		
	B	B	A	B	A	B			B	A	A	B			B	B	E
	H7	Ø.95-5.5 0.+0.004 Ø6.51-12 0.+0.006	H7	H7	H7	H7			H7						H7	Ø.95-5.5 0.+0.004 Ø6.51-12 0.+0.006	H7
										1:48	1:50	1:50		1:50			
																	
	B400	B481	B441	B411	B442	B100	B334	B335	B901	B301	B903	B952	B122	B953	B180	B170	B157
	1.00 - 20.00	0.98 - 12.05	10.00 - 20.00	5.00 - 30.00	10.00 - 20.00	1.50 - 50.00	N000 - N16	N000BLADES - N16NUT	1.50 - 1/2	1/16 - 1/2	1.50 - 20.00	1.20 - 50.00	3/8 - 1.1/16	1.00 - 12.00	1.50 - 20.0	0.98 - 12.00	2.00 - 20.00

AMG	146	147	149	150	151	152	154	155	156	157	158	159	160	161	162	164	167	ISO
1.1	•18B	•18B	•18B	•18B	•18B	■18C	■18C		■18C	■18C	■18C	■18C	■18C	•25C	■25C	■25C	■25C	P 1
1.2	•18B	•18B	•18B	•18B	•18B	■14C	■14C		■14C	■14C	■14C	■14C	■14C	•20C	■20C	■20C	■20C	P 1
1.3	•14B	•14B	•14B	•14B	•14B	■11C	■11C		■11C	■11C	■11C	■11C	■11C	•16C	■16C	■16C	■16C	P 2
1.4	•14B	•14B	•14B	•14B	•14B	■10B	■10B		■10B	■10B	■10B	■10B	■10B	•15B	■15B	■15B	■15B	P 3
1.5	■10C	■10C	■10C	■10C	■10C	•5B	•5B		•5B	•5B	•5B	•5B	•5B	•9B	•9B	•9B	•9B	P 4
1.6	■10C	■10C	■10C	■10C	■10C	•4A	•4A		•4A	•4A	•4A	•4A	•4A	•5A	•5A	•5A	•5A	H 1
1.7																		H 3
1.8																		H 4
2.1						■8F	■8F		■8C	■8C	■8C	■8C	■8C	■11C	■11C	■11C	■11C	M 1
2.2										•5B	•5B	•5B	•5B	■6B	•6B	•6B	■6B	M 3
2.3										•6B	•6B	•6B	•6B	■8B	•8B	•8B	■8B	M 2
2.4															•6B			S 2
3.1	■17D	■17D	■17D	■17D	■17D	■14E	■14E		■14E	■14E	■14E	■14E	■14E		•16E	•16E		K 1
3.2	■17D	■17D	■17D	■17D	■17D	•11D	•11D		•11D	•11D	•11D	•11D	•11D		•15D	•15D		K 2
3.3	■17D	■17D	■17D	■17D	■17D	•10C	•10C		•10C	•10C	•10C	•10C	•10C		•13C	•13C		K 3
3.4	■14D	■14D	■14D	■14D	■14D	•9C	•9C		•9C	•9C	•9C	•9C	•9C		•11C	•11C		K 4
4.1	■14C	■14C	■14C	■14C	■14C	■11C	■11C		■11C	■11C	■11C	■11C	■11C	■15C	•15C	•15C	■15C	S 1
4.2	■14C	■14C	■14C	■14C	■14C	•5B	•5B		•5B	•5B	•5B	•5B	•5B	■9B	■9B	■9B	■9B	S 2
4.3	■10B	■10B	■10B	■10B	■10B	•4B	•4B		•4B	•4B	•4B	•4B	•4B	■5B	•5B	•5B	■5B	S 3
5.1	■10C	■10C	■10C	■10C	■10C	•5D	•5D		•5D	•5D	•5D	•5D	•5D	■8D	■8D	■8D	■8D	S 1
5.2	■10B	■10B	■10B	■10B	■10B	•3C	•3C		•3C					■5C	•5C	•5C	■5C	S 2
5.3	■10B	■10B	■10B	■10B	■10B	•2C	•2C		•2C					■3C	•3C	•3C	■3C	S 3
6.1	■38E	■38E	■38E	■38E	■38E	•18D	•18D		•18D	•18D	•18D	•18D	•18D	■25D	•25D	•25D	■25D	N 3
6.2	■38E	■38E	■38E	■38E	■38E	■20E	■20E		■20E	■20E	■20E	■20E	■20E	•28E	•28E	•28E	•28E	N 4
6.3	■38E	■38E	■38E	■38E	■38E	•18D	•18D		•18D	•18D	•18D	•18D	•18D		•25D	•25D		N 3
6.4	■38D	■38D	■38D	■38D	■38D	•11D	•11D		•11D	•11D	•11D	•11D	•11D		•14D	•14D		N 4
7.1	■60D	■60D	■60D	■60D	■60D	•23F	•23F		•23F	•23F	•23F	•23F	•23F	■28F			■28F	N 1
7.2	■60D	■60D	■60D	■60D	■60D	•18F	•18F		•18F	•18F	•18F	•18F	•18F	■25F			■25F	N 1
7.3	■25D	■25D	■25D	■25D	■25D					•15E	•15E	•15E	•15E	■20E			■20E	N 1
7.4	■25D	■25D	■25D	■25D	■25D					•14D	•14D	•14D	•14D	■16D			■16D	N 2
8.1	■25C	■25C	■25C	■25C	■25C									■30B			■30B	O
8.2	■13C	■13C	■13C	■13C	■13C	•21B	•21B		•21B	•21B	•21B	•21B	•21B					O
8.3																		O
9.1														•3A			•3A	H
10.1																		O

DORMER

	HSS-E	HSS-E	HSS	HSS-E	HSS-E	HSS-E		
		ST	ST		ST			
	DIN 208	BS 328	DIN 311	DIN 2180	DIN 219	DIN 217		
	B	B			B			
	H7	H7	k11		H7			
				1:50				
								
	B161	B101	B121	B954	B955	B956	B957	
	3.00 - 50.00	3.00 - 2“	10.00 - 30.00	5.00 - 30.00	25.00 - 80.00	13.00 - 40.00	N3DRIVER - N9WASHER	

AMG	168	170	172	173	174	175	176	ISO
1.1	■25C	■18C	■18C	●25C	■18C			P 1
1.2	■20C	■14C	■14C	●20C	■14C			P 1
1.3	■16C	■11C	■11C	●16C	■11C			P 2
1.4	■15B	■10B	■10B	●15B	■10B			P 3
1.5	●9B	●5B	●5B	●9B	●5B			P 4
1.6	●5A	●4A	●4A	●5A	●4A			H 1
1.7								H 3
1.8								H 4
2.1	■11C	■8C		■11C	■8C			M 1
2.2	●6B			■6B	●5B			M 3
2.3	●8B			■8B	●6B			M 2
2.4								S 2
3.1	●16E	■14E	■14E		●14E			K 1
3.2	●15D	●11D	●11D					K 2
3.3	●13C	●10C	●10C					K 3
3.4	●11C	●9C	●9C					K 4
4.1	■15C	■11C	■11C	■15C	■11C			S 1
4.2	●9B	●5B		■9B	●5B			S 2
4.3	●5B	●4B		■5B	●4B			S 3
5.1	■8D	●5D		■8D	■5D			S 1
5.2	●5C	●3C		■5C	●3C			S 2
5.3	●3C	●2C		■3C	●2C			S 3
6.1	●25D	●18D		■25D	●18D			N 3
6.2	●28E	■20E		●28E	●20E			N 4
6.3	●25D	●18D						N 3
6.4	●14D	●11D						N 4
7.1		●23F		■28F	●23F			N 1
7.2		●18F		■25F	●18F			N 1
7.3				■20E	●15E			N 1
7.4				■16D	●14D			N 2
8.1				■30B				O
8.2		●21B	●21B		●21B			O
8.3								O
9.1				●3A				H
10.1								O

DORMER

材料	Material	Material	Material
涂层	Tratamento	Tratamiento superficial	Coating
标准	Norma	Estándar	Standard
加工方向	Direção	Dirección	Direction
应用	Aplicação	Aplicaciones	Application
柄部	Haste	Mango	Shank
锪孔度数	Ângulo de Escareado	º de avellanado	Countersink º

■ 性能卓越	Excelente para a Aplicação	Excelente para Aplicación	Excellent for Application
● 性能良好	Bom para a Aplicação	Bueno para Aplicación	Good for Application
实例 10 = 外缘处的切削速度，米/分，+/- 10%	Exemplo 10 = Velocidade periférica em metros/minuto +/- 10%	Ejemplo 10 = Velocidad Periférica en metros/minuto +/- 10%	Example 10 = Peripheral speed in metres/minute +/- 10%

产品型号	Código	Código de producto	Product Codes
尺寸范围	Gama de medidas	Rango de Diámetros	Size Range

AMG	中文	Português	Español	English
1.1	铁磁性低碳钢	Aço macio magnético	Acero blando	Magnetic soft steel
1.2	结构钢, 表面渗碳钢	Aço estrutural, Aço cementado	Acero de construcción/cementación	Structural steel, case carburizing steel
1.3	普通碳钢	Aço-carbono	Acero al carbono	Plain Carbon steel
1.4	合金钢	Aço de liga	Acero aleado	Alloy steel
1.5	合金钢, 淬火回火钢	Aço de liga, Aço temperado	Acero aleado/temple y revenido	Alloy steel, Hardened and tempered steel
1.6	合金钢, 淬火回火钢	Aço de liga, Aço temperado	Acero aleado/temple y revenido	Alloy steel, Hardened and tempered steel
1.7	热处理合金钢	Aço de liga temperado	Acero aleado cementado	Alloy steel, Heat treated
1.8	淬火合金钢, 耐磨钢	Aço de liga temperado	Acero aleado cementado	Alloy steel, Hardened & Wear resistant steel
2.1	易切削不锈钢	Aço inoxidável de maquinagem fácil	Acero inoxidable fácil mecanizado	Free machining, Stainless Steel
2.2	奥氏体不锈钢	Austenítico	Austenítico	Austenitic
2.3	铁素体 + 奥氏体, 马氏体不锈钢	Ferrítico + Austenítico + Martensítico	Ferritico, Ferr. + Aust., Marten	Ferritic + Austenitic, Ferritic, Martensitic
2.4	沉淀硬化不锈钢	Aço inoxidável de fácil usinagem	Acero Inoxidable Templado	Precipitation Hardened
3.1	灰铸铁	Grafite laminar	Con grafito laminar	Lamellar graphite
3.2	灰铸铁	Grafite laminar	Con grafito laminar	Lamellar graphite
3.3	球墨铸铁, 可锻铸铁	Grafite nodular/ Ferro fundido maleável	Con graf. laminar, fundic. maleable	Nodular graphite, Malleable Cast Iron
3.4	球墨铸铁, 可锻铸铁	Grafite nodular/ Ferro fundido maleável	Con graf. laminar, fundic. maleable	Nodular graphite, Malleable Cast Iron
4.1	纯钛	Titânio, sem liga	Titanio no aleado	Titanium, unalloyed
4.2	钛合金	Titânio, com liga	Titanio aleado	Titanium, alloyed
4.3	钛合金	Titânio, com liga	Titanio aleado	Titanium, alloyed
5.1	纯镍	Níquel, sem liga	Níquel no aleado	Nickel, unalloyed
5.2	镍合金	Níquel, com liga	Níquel aleado	Nickel, alloyed
5.3	镍合金	Níquel, com liga	Níquel aleado	Nickel, alloyed
6.1	紫铜	Cobre	Cobre	Copper
6.2	β黄铜, 青铜	Latão beta, bronze	β-Latón, bronce	β-Brass, Bronze
6.3	α黄铜	Latão alfa	α-Latón	α-Brass
6.4	高强度青铜	Bronze de alta resistência	Metal AMPCO	High Strength Bronze
7.1	纯铝, 纯镁	Al, Mg, sem liga	Al, Mg, no aleado	Al, Mg, unalloyed
7.2	铝合金, 硅含量 < 0.5%	Al com liga, Si<0.5%	Al aleado con Si < 0.5%	Al alloyed, Si < 0.5%
7.3	铝合金, 硅含量 > 0.5% < 10%	Al com liga, Si>0.5%<10%	Al aleado con Si > 0.5% < 10%	Al alloyed, Si > 0.5% < 10%
7.4	铝合金, 硅含量 > 10% 晶须增强铝合金, 镁合金	Al com liga, Si>10% reforçadas com monocristais filiformes, ligas de Al/Mg	Al aleado, Si>10% Reforzado por filamentos, Al-aleados, Mg-aleados	Al alloyed, Si > 10% Whisker reinforced Al-alloys Mg-alloys
8.1	调整字体大小, 适应排版需要	Termoplásticos	Termoplásticos	Thermoplastics
8.2	热固性塑料	Plásticos termoduros	Plásticos endurecidos por calor	Thermosetting plastics
8.3	增强塑料	Materiais plásticos reforçados	Materiales plásticos reforzados	Reinforced plastic materials
9.1	金属陶瓷	Cerametal (metalocerâmica)	Cerametales (metales-cerámicas)	Cermets (metals-ceramics)
10.1	标准石墨	Grafite standard	Grafito standard	Graphite

	HM	HSS	HSS	HSS	HSS	HSS	HSS-E	HSS	HSS	HSS	HSS	HSS	HSS-E	HSS-E
			TiN						TiAlN		TiAlN		AlTiCrN	
	DIN 335C	DIN 334C	DIN 334C	DIN 334D	DIN 335C	DORMER	DORMER	DIN 335C	DIN 335C	DIN 335C	DIN 335C	DIN 335C	DIN 335C	DORMER
	90°	60°	60°	60°	82°	90°	90°	90°	90°	90°	90°	90°	90°	90°
														
	G400	**G135**	**G335**	**G137**	**G154**	**G129**	**G149**	**G136**	**G560**	**G106**	**G506**	**G142**	**G570**	**G107**
	6.30 - 31.00	6.30 - 25.00	6.30 - 25.00	16.00 - 80.00	6.30 - 25.00	6.00 - 31.50	5.00 - 50.00	4.30 - 31.00	6.30 - 31.00	6.30 - 50.00	6.30 - 50.00	4.80 - 31.00	6.30 - 31.00	6.30 - 20.50
										NEW	NEW			NEW
AMG	**177**	**178**	**178**	**179**	**180**	**181**	**182**	**183**	**183**	**183**	**183**	**185**	**185**	**186**	**ISO**
1.1	■30F	■30F	■50E	■30F	■30F	■30D	■30D	■30F	■50E	■30F	■50E	■30F	●45E	■30F	P 1
1.2	■25E	■25E	■40E	■25E	■25E	■25D	■25D	■25E	■40E	■25E	■40E	■25E	●36E	■25E	P 1
1.3	■20D	■20D	■30D	■20D	■20D	■20C	■20C	■20D	■30D	■20D	■30D	●20D	●27D	■20D	P 2
1.4	■15D	■15D	●20D	■15D	■15D	■15B	■15B	■15D	■20D	■15D	●20D	●15D	■22D	■15D	P 3
1.5	■10B	■10B	●15B	■10B	■10B	●10A	●10A	●10B	■15B	■10B	●15B		■17B	■10B	P 4
1.6	●6A	●6A	●10B	●6A	●6A	●6A	●6A	●6A	●10B	●6A	●10B		●12B	●6A	H 1
1.7															H 3
1.8															H 4
2.1	●8C	●8C		●8C	●8C	●8B	●8B	●8C	■8C	●8C		■8C	■17C	●8C	M 1
2.2	●6B	●6B		●6B	●6B	●6A	●6A	●6B	●6B	●6B		■6B	■12B	●6B	M 3
2.3	●4A	●4A		●4A	●4A			●4A	●4A	●4A		■4A	■15A	●4A	M 2
2.4													●10A		S 2
3.1	●25F	●25F	■45F	●25F	●25F	●25D	●25D	●25F	■45F	●25F	■45F		●40C	●25F	K 1
3.2	●15D	●15D	■35D	●15D	●15D	●15C	●15C	●15D	■35D	●15D	■35D		●32C	●15D	K 2
3.3	●12C	●12C	■30C	●12C	●12C	●12A	●12A	●12C	■30C	●12C	■30C		●27C	●12C	K 3
3.4	●8C	●8C	■30C	●8C	●8C	●8A	●8A	●8C	■30C	●8C	■30C		●24C	●8C	K 4
4.1	■12C	■12C	●20C	■12C	■12C	■12B	■12B	■12C	●20C	■12C	●20C	■12C		■12C	S 1
4.2	■10A	■10A	●15A	■10A	■10A	■10A	■10A	■10A	●15A	■10A	●15A	●10A		■10A	S 2
4.3	■8A	■8A	●10A	■8A	■8A	●8A	●8A	●8A	●10A	■8A	●10A			■8A	S 3
5.1	■12C	■12C	●20C	■12C	■12C	■12B	■12B	■12C	■20C	■12C	●20C	■12C		■12C	S 1
5.2	■6B	■6B	●10B	■6B	■6B	■6A	■6A	■6B	■10B	■6B	●10B	●6B	●6A	■6B	S 2
5.3	■4A	■4A	●6A	■4A	■4A	●4A	●4A	●4A	■6A	■4A	●6A		●4A	■4A	S 3
6.1	■25D	■25D	●40D	■25D	■25D	■25B	■25B	■25D	●40D	■25D	●40D	■25D	●40D	■25D	N 3
6.2	■20F	■20F	●30F	■20F	■20F	■20C	■20C	■20F	●30F	■20F	●30F	■20F	●30F	■20F	N 4
6.3	■25F	■25F	●40F	■25F	■25F	■25C	■25C	■25F	●40F	■25F	●40F	●25F	●40F	■25F	N 3
6.4	●10D	●10D	●15D	●10D	●10D	●10B	●10B	●10D	●15D	●10D	●15D		●15D	●10D	N 4
7.1	●30G	●30G	■50G	●30G	●30G	■30D	■30D	■30G	●50G	●30G	■50G	■30G	●45G	●30G	N 1
7.2	●25F	●25F	■40F	●25F	●25F	■25C	■25C	■25F	●40F	●25F	■40F	■25F	●36F	●25F	N 1
7.3	●20F	●20F	■30F	●20F	●20F	●20C	●20C	●20F	■30F	●20F	■30F	●20F	●27F	●20F	N 1
7.4	●10F	●10F	■15F	●10F	●10F	●10C	●10C	●10F	■15F	●10F	■15F	●10F	●13F	●10F	N 2
8.1	●30G	●30G	●50G	●30G	●30G	●30D	●30D	■30G	●50G	●30G	●50G	■30G		●30G	O
8.2	●20G	●20G	●30G	●20G	●20G	●20D	●20D	●20G	●30G	●20G	●30G	■20G		●20G	O
8.3															O
9.1															H
10.1															O

DORMER

	HSS	HSS	HSS	HSS	HSS	HSS	HSS	HSS	
				TiN	TiAlN	ST			
	DORMER	DIN 335A	DIN 335D	DIN 335D	DIN 335C	DORMER	DORMER	DIN 373	
	90°	90°	90°	90°	100°	20°	20°	180°	
									
	G600	G132	G138	G338	G171	M138	G314	G125	G236
	6.30 - 25.00	8.00 - 20.00	25.00 - 80.00	25.00 - 63.00	6.30 - 25.00	No.1 - No.6	4.00 - 9.00	6.50 - 20.00	Set
									NEW
AMG	187	188	189	189	190	191	192	193	194	ISO
1.1	■22F		■30F	■50F	■50E	■30D	■30D	■30E		P 1
1.2	■17E		■25E	■40E	■40E	■25D	■25D	■25E		P 1
1.3	■15D	●20E	■20D	■30D	■30D	■20C	■20C	■20D		P 2
1.4	■12D	●15D	■15D	■20D	●20D	■15B	■15B	●15D		P 3
1.5	■8B	■10D	■10B	■15B	●15B	●10A	●10A	●10C		P 4
1.6	●6A	■6B	●6A	●10A	●10B	●6A	●6A	●6C		H 1
1.7										H 3
1.8										H 4
2.1	●8C		●8C			●8B	●8B	■8D		M 1
2.2	●6B		●6B			●6A	●6A	●6C		M 3
2.3	●4A	●4B	●4A			●4A	●4A			M 2
2.4										S 2
3.1	●25F		●25F	■45F	■45F	●25D	●25D	■25E		K 1
3.2	●15D		●15D	■35D	■35D	●15C	●15C	■15E		K 2
3.3	●12C		●12C	■30C	■30C	●12A	●12A	●12D		K 3
3.4		■8D	●8C	■30C	■30C	●8A	●8A	●8C		K 4
4.1			■12C	●20C	●20C	■12B	■12B	●12E		S 1
4.2		■8A	■10A	●15A	●15A	■10A	■10A	●10E		S 2
4.3		■8A	■8A	●10A	●10A	■8A	■8A	●8E		S 3
5.1			■12C	●20C	●20C	■12B	■12B	●12E		S 1
5.2		■6C	■6B	●10B	●10B	■6A	■6A	●6C		S 2
5.3		■4B	■4A	●6A	●6A	■4A	■4A	●4E		S 3
6.1	●25D		■25D	●40D	●40D	■25B	■25B	●25C		N 3
6.2	●20F		■20F	●30F	●30F	■20C	■20C	●20C		N 4
6.3	●25F		■25F	●40F	●40F	■25C	■25C	●25C		N 3
6.4	●10D	■10F	●10D	●15D	●15D	●10B	●10B			N 4
7.1	●30G		●30G	■50G	■50G	■30D	■30D	■30G		N 1
7.2	●25F		●25F	■40F	■40F	■25C	■25C	■25G		N 1
7.3	●20F		●20F	■30F	■30F	●20C	●20C	●20G		N 1
7.4	●10F		●10F	■15F	■15F	●10C	●10C	●10E		N 2
8.1			●30G	●50G	●50G	■30D	■30D	■30C		O
8.2			●20G	●30G	●30G	■20D	■20D	●20C		O
8.3		●5G								O
9.1										H
10.1										O

	Ø mm												
	1,5	2	3	5	8	10	12	16	20	25	30	40	50
A	0,045	0,055	0,078	0,100	0,150	0,170	0,185	0,220	0,250	0,280	0,320	0,390	0,440
B	0,055	0,072	0,110	0,150	0,180	0,210	0,240	0,280	0,310	0,360	0,400	0,500	0,550
C	0,065	0,085	0,135	0,185	0,220	0,260	0,285	0,335	0,390	0,440	0,480	0,600	0,680
D	0,080	0,110	0,160	0,200	0,270	0,320	0,360	0,410	0,470	0,540	0,600	0,730	0,850
E	0,100	0,140	0,180	0,250	0,350	0,390	0,430	0,500	0,530	0,640	0,750	0,910	1,100
F	0,140	0,180	0,260	0,350	0,440	0,500	0,550	0,630	0,700	0,800	0,930	1,200	1,500
	mm/REV ± 15 %												

	Ø mm									
	6	8	10	16	20	25	32	40	60	80
A	0.03	0.04	0.05	0.06	0.08	0.09	0.10	0.12	0.14	0.16
B	0.04	0.05	0.06	0.08	0.10	0.12	0.14	0.16	0.18	0.20
C	0.05	0.06	0.08	0.10	0.12	0.14	0.16	0.18	0.20	0.22
D	0.06	0.08	0.10	0.12	0.15	0.18	0.20	0.22	0.25	0.28
E	0.08	0.10	0.12	0.15	0.18	0.20	0.25	0.27	0.30	0.32
F	0.09	0.11	0.13	0.16	0.19	0.21	0.26	0.29	0.33	0.36
G	0.10	0.12	0.15	0.18	0.20	0.22	0.28	0.32	0.36	0.40
H	0.12	0.15	0.18	0.20	0.22	0.25	0.30	0.35	0.40	0.45
	mm/REV									

● 预钻孔时确定铰削余量的一般准则 ● Regras gerais para material a ser removido durante a furação ● Guía general para la eliminación de material cuando existe agujero pre-taladrado ● General guidelines for stock removal when pre-drilling holes

	Ø (mm)					
	3 - 5mm	**5.1 - 10mm**	**10.1 - 20mm**	**20.1 - 30mm**	**> 30mm**	
1.1	0.1-0.2	0.2	0.2-0.3	0.3-0.4	0.4-.05	P 1
1.2	0.1-0.2	0.2	0.2-0.3	0.3-0.4	0.4-.05	P 1
1.3	0.1-0.2	0.2	0.2-0.3	0.3-0.4	0.4-.05	P 2
1.4	0.1-0.2	0.2	0.2	0.3	0.3-0.4	P 3
1.5	0.1-0.2	0.2	0.2	0.3	0.3-0.4	P 4
1.6	0.1-0.2	0.2	0.2	0.3	0.3-0.4	H 1
1.7	0.1-0.2	0.2	0.2	0.3	0.3-0.4	H 3
1.8	0.1-0.2	0.2	0.2	0.3	0.3-0.4	H 4
2.1	0.1-0.2	0.2	0.2	0.3	0.3-0.4	M 1
2.2	0.1-0.2	0.2	0.2	0.3	0.3-0.4	M 3
2.3	0.1-0.2	0.2	0.2	0.3	0.3-0.4	M 2
2.4	0.1-0.2	0.2	0.2	0.3	0.3-0.4	S 2
3.1	0.1-0.2	0.2	0.2-0.3	0.3-0.4	0.4-0.5	K 1
3.2	0.1-0.2	0.2	0.2-0.3	0.3-0.4	0.4-0.5	K 2
3.3	0.1-0.2	0.2	0.3	0.4	0.5	K 3
3.4	0.1-0.2	0.2	0.3	0.4	0.5	K 4
4.1	0.1-0.2	0.2	0.2-0.3	0.3-0.4	0.3-0.4	S 1
4.2	0.1-0.2	0.2	0.2	0.3	0.3-0.4	S 2
4.3	0.1-0.2	0.2	0.2	0.3	0.3-0.4	S 3
5.1	0.1-0.2	0.2	0.2-0.3	0.3-0.4	0.4-.05	S 1
5.2	0.1-0.2	0.2	0.2	0.3	0.3-0.4	S 2
5.3	0.1-0.2	0.2	0.2	0.3	0.3-0.4	S 3
6.1	0.1-0.2	0.2-0.3	0.3-0.4	0.4-0.5	0.5	N 3
6.2	0.1-0.2	0.2	0.2-0.3	0.3	0.3-0.4	N 4
6.3	0.1-0.2	0.2	0.2-0.3	0.3	0.3-0.4	N 3
6.4	0.1-0.2	0.2	0.2-0.3	0.3	0.3-0.4	N 4
7.1	0.1-0.2	0.2-0.3	0.3-0.4	0.4-0.5	0.5	N 1
7.2	0.1-0.2	0.2-0.3	0.3-0.4	0.4-0.5	0.5	N 1
7.3	0.1-0.2	0.2-0.3	0.3-0.4	0.4-0.5	0.5	N 1
7.4	0.1-0.2	0.2-0.3	0.3-0.4	0.4-0.5	0.5	N 2
8.1	0.1-0.2	0.3	0.4	0.4-0.5	0.5	O
8.2	0.1-0.2	0.2	0.2	0.3	0.3-0.4	O
8.3	0.1-0.2	0.2	0.2	0.3	0.3-0.4	O
9.1	0.1-0.2	0.2	0.2	0.3	0.3-0.4	H
10.1	0.1-0.2	0.2	0.2-0.3	0.3-0.4	0.4-0.5	O

对于可调铰刀或镶片铰刀，把铰削余量减少 30%； 对于大螺旋角铰刀，把铰削余量增加 50% / Para alargadores ajustáveis reduza o sobremetal em 30%. Para alargadores com hélice rápida aumente em 50% / Para escariadores ajustables y con cuchillas reducir la eliminación de material un 30%.Para escariadores de hélice rápida incrementar un 50% / For adjustable or blade reamers reduce stock removal by 30%. For quick helix reamers increase by 50%

B400

- 左旋直柄铰刀
- Alargador Máquina com Espaçamento Extremamente Desigual
- Escariador de máquina Espacio desigual
- Machine Reamer Extremely unequal spacing

B400																					
	▪	1.5	1.6	3.1	3.2	3.3	3.4	4.1	4.2	4.3	5.1	5.2	5.3	6.1	6.2	6.3	6.4	7.1	7.2	7.3	7.4
		8.1	8.2																		
	•	1.1	1.2	1.3	1.4																

B400 HM | DIN 8093 | B | H7

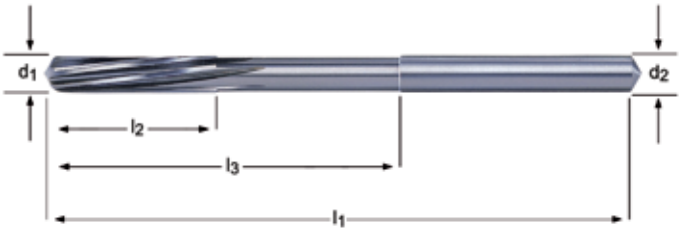

B400

1.00 - 20.00

d_1 Ø mm	l_1 mm	l_2 mm	l_3 mm	z	d_2 Øh_9 mm	B400
1.0	34	6	15	3	1.0	B4001.0 [1]
1.2	38	8	16.5	3	1.2	B4001.2 [1]
1.4	40	8	18	3	1.4	B4001.4 [1]
1.5	40	8	18	3	1.5	B4001.5 [1]
1.6	49	11	26	3	1.6	B4001.6 [1]
1.8	49	11	25	4	1.8	B4001.8 [1]
2.0	49	11	24	4	2.0	B4002.0 [1]
2.2	57	15	30	4	2.2	B4002.2 [1]
2.5	57	15	28	4	2.5	B4002.5 [1]
2.8	61	15	32	4	2.8	B4002.8 [1]
3.0	61	15	30	6	3.0	B4003.0 [1]
3.2	70	18	33	6	3.2	B4003.2 [1]
3.5	70	18	33	6	3.5	B4003.5 [1]
4.0	75	19	44	6	4.0	B4004.0 [1]
4.5	80	21	46	6	4.5	B4004.5 [1]
5.0	86	23	53	6	5.0	B4005.0 [1]
5.5	93	26	56	6	5.6	B4005.5 [1]
6.0	93	26	56	6	5.6	B4006.0 [1]
6.5	101	28	63	6	6.3	B4006.5 [2]
7.0	109	31	69	6	7.1	B4007.0 [2]
8.0	117	33	75	6	8.0	B4008.0 [2]
9.0	125	36	81	6	9.0	B4009.0 [2]
10.0	133	38	87	6	10.0	B40010.0 [2]
12.0	151	44	105	6	10.0	B40012.0 [2]
14.0	160	47	110	8	12.5	B40014.0 [2]
16.0	170	52	120	8	12.5	B40016.0 [2]
18.0	182	56	130	6	14.0	B40018.0 [3]
20.0	195	60	137	6	16.0	B40020.0 [3]

[1] 整体硬质合金 / Inteiriço em metal duro / Monobloc de Metal Duro / Solid Carbide
[2] 硬质合金刀头 / Cabeça soldada de metal duro / Cabeza de Metal Duro / Carbide Head
[3] 硬质合金镶片 / Facas soldadas de metal duroo / Punta de Metal Duro / Carbide Tipped

B481

- NC-用于高精度夹头以丝为单位的铰刀
- NC - Alargador Centesimal para Porta Ferramentas de Alta Precisão
- NC - Escariador Centesimal para portas de alta precisión
- NC - Centesimal Reamer for High Precision Chucks

极不等距
Espaçamento Extremamente Desigual
Espacio extremadamente irregular
Extremely unequal spacing

B481																					
	▪	1.5	1.6	3.1	3.2	3.3	3.4	4.1	4.2	4.3	5.1	5.2	5.3	6.1	6.2	6.3	6.4	7.1	7.2	7.3	7.4
		8.1	8.2																		
	•	1.1	1.2	1.3	1.4																

B481 HM DIN 8093 DIN 6535HA B Ø.95-5.5 0,+0.004 Ø5.51-12 0,+0.005

B481

0.98 - 12.05

d_1 Ø mm	l_1 mm	l_2 mm	l_3 mm	z	d_2 Øh_6 mm	B481
0.98	49.5	6	21.5	3	4	B4810.98
0.99	49.5	6	21.5	3	4	B4810.99
1.00	49.5	6	21.5	3	4	B4811.00
1.01	49.5	6	21.5	3	4	B4811.01
1.02	49.5	6	21.5	3	4	B4811.02
1.03	49.5	9	21.5	3	4	B4811.03
1.48	49	9	21	3	4	B4811.48
1.49	49	9	21	3	4	B4811.49
1.50	49	9	21	3	4	B4811.50
1.51	49	9	21	3	4	B4811.51
1.52	49	9	21	3	4	B4811.52
1.53	49	9	21	3	4	B4811.53
1.98	49	12	21	4	4	B4811.98
1.99	49	12	21	4	4	B4811.99
2.00	49	12	21	4	4	B4812.00
2.01	49	12	21	4	4	B4812.01
2.02	49	12	21	4	4	B4812.02
2.03	49	12	21	4	4	B4812.03
2.48	59	16	31	4	4	B4812.48
2.49	59	16	31	4	4	B4812.49
2.50	59	16	31	4	4	B4812.50
2.51	59	16	31	4	4	B4812.51
2.52	59	16	31	4	4	B4812.52
2.53	59	16	31	4	4	B4812.53
2.97	62.5	17	35	6	4	B4812.97
2.98	62.5	17	35	6	4	B4812.98
2.99	62.5	17	35	6	4	B4812.99
3.00	62.5	17	35	6	4	B4813.00
3.01	62.5	17	35	6	4	B4813.01
3.02	62.5	17	35	6	4	B4813.02
3.03	62.5	17	35	6	4	B4813.03
3.97	75	19	47	6	4	B4813.97
3.98	75	19	47	6	4	B4813.98
3.99	75	19	47	6	4	B4813.99
4.00	75	19	47	6	4	B4814.00
4.01	75	19	47	6	4	B4814.01
4.02	75	19	47	6	4	B4814.02
4.03	75	19	47	6	4	B4814.03

d_1 Ø mm	l_1 mm	l_2 mm	l_3 mm	z	d_2 Øh_6 mm	B481
4.97	86	23	50	6	6	B4814.97
4.98	86	23	50	6	6	B4814.98
4.99	86	23	50	6	6	B4814.99
5.00	86	23	50	6	6	B4815.00
5.01	86	23	50	6	6	B4815.01
5.02	86	23	50	6	6	B4815.02
5.03	86	23	50	6	6	B4815.03
5.97	93	26	57	6	6	B4815.97
5.98	93	26	57	6	6	B4815.98
5.99	93	26	57	6	6	B4815.99
6.00	93	26	57	6	6	B4816.00
6.01	93	26	57	6	6	B4816.01
6.02	93	26	57	6	6	B4816.02
6.03	93	26	57	6	6	B4816.03
7.97	117	33	81	6	8	B4817.97
7.98	117	33	81	6	8	B4817.98
7.99	117	33	81	6	8	B4817.99
8.00	117	33	81	6	8	B4818.00
8.01	117	33	81	6	8	B4818.01
8.02	117	33	81	6	8	B4818.02
8.03	117	33	81	6	8	B4818.03
8.04	117	33	81	6	8	B4818.04
9.97	133	38	93	6	10	B4819.97
9.98	133	38	93	6	10	B4819.98
9.99	133	38	93	6	10	B4819.99
10.00	133	38	93	6	10	B48110.00
10.01	133	38	93	6	10	B48110.01
10.02	133	38	93	6	10	B48110.02
10.03	133	38	93	6	10	B48110.03
10.04	133	38	93	6	10	B48110.04
10.05	133	38	93	6	10	B48110.05
11.97	151	44	106	6	12	B48111.97
11.98	151	44	106	6	12	B48111.98
11.99	151	44	106	6	12	B48111.99
12.00	151	44	106	6	12	B48112.00
12.01	151	44	106	6	12	B48112.01
12.02	151	44	106	6	12	B48112.02
12.03	151	44	106	6	12	B48112.03
12.04	151	44	106	6	12	B48112.04
12.05	151	44	106	6	12	B48112.05

B441

- 极不等距机用铰刀
- Alargador Máquina com Espaçamento Extremamente Desigual
- Escariador de máquina Espacio desigual
- Machine Reamer Extremely unequal spacing

B441	▪	1.5 1.6 3.1 3.2 3.3 3.4 4.1 4.2 4.3 5.1 5.2 5.3 6.1 6.2 6.3 6.4 7.1 7.2 7.3 7.4 8.1 8.2
	•	1.1 1.2 1.3 1.4

B441 HM DIN 8050 A H7

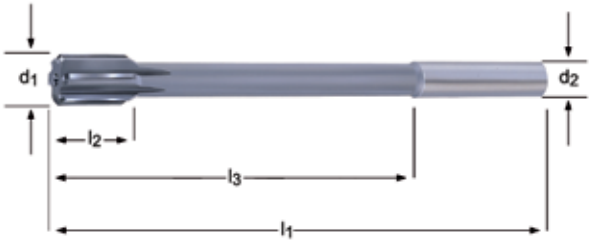

B441

10.00 - 20.00

d_1 Ø mm	l_1 mm	l_2 mm	l_3 mm	z	d_2 Øh_9 mm	B441
10.0	133	19	87	6	10	B44110.0 [3]
11.0	142	19	96	6	10	B44111.0 [3]
12.0	151	19	105	6	10	B44112.0 [3]
13.0	151	19	105	6	10	B44113.0 [3]
14.0	160	19	110	6	12.5	B44114.0 [3]
15.0	162	19	112	6	12.5	B44115.0 [3]
16.0	170	22	120	6	12.5	B44116.0 [3]
17.0	175	22	123	6	14	B44117.0 [3]
18.0	182	22	130	6	14	B44118.0 [3]
19.0	189	22	131	6	16	B44119.0 [3]
20.0	195	22	137	6	16	B44120.0 [3]

[3] 硬质合金镶片 / Facas soldadas de metal duro / Punta de Metal Duro / Carbide Tipped

B411

- 极不等距机用铰刀
- Alargador Máquina com Espaçamento Extremamente Desigual
- Escariador de máquina Espacio desigual
- Machine Reamer Extremely unequal spacing

B411																					
	▪	1.5	1.6	3.1	3.2	3.3	3.4	4.1	4.2	4.3	5.1	5.2	5.3	6.1	6.2	6.3	6.4	7.1	7.2	7.3	7.4
		8.1	8.2																		
	•	1.1	1.2	1.3	1.4																

B411 HM DIN 8094 B H7

B411

5.00 - 30.00

d_1 Ø mm	l_1 mm	l_2 mm	l_3 mm	z	MK	B411
5.0	133	23	67.5	6	1	B4115.0 [2]
6.0	138	26	72.5	6	1	B4116.0 [2]
7.0	150	31	84.5	6	1	B4117.0 [2]
8.0	156	33	90.5	6	1	B4118.0 [2]
9.0	162	36	96.5	6	1	B4119.0 [2]
10.0	168	38	102.5	6	1	B41110.0 [2]
12.0	182	44	116.5	6	1	B41112.0 [2]
14.0	189	47	123.5	8	1	B41114.0 [2]
15.0	204	50	124	8	2	B41115.0 [2]
16.0	210	52	130	8	2	B41116.0 [2]
17.0	214	54	134	6	2	B41117.0 [3]
18.0	219	56	139	6	2	B41118.0 [3]
19.0	223	58	143	6	2	B41119.0 [3]
20.0	228	60	148	6	2	B41120.0 [3]
22.0	237	64	157	6	2	B41122.0 [3]
24.0	268	68	169	8	3	B41124.0 [3]
25.0	268	68	169	8	3	B41125.0 [3]
26.0	273	70	174	8	3	B41126.0 [3]
30.0	281	73	182	8	3	B41130.0 [3]

[2] 硬质合金刀头 / Cabeça soldada de metal duro / Cabeza de Metal Duro / Carbide Head
[3] 硬质合金镶片 / Facas soldadas de metal duro / Punta de Metal Duro / Carbide Tipped

B442

- 极不等距机用铰刀
- Alargador Máquina com Espaçamento Extremamente Desigual
- Escariador de máquina Espacio desigual
- Machine Reamer Extremely unequal spacing

B442																					
	▪	1.5	1.6	3.1	3.2	3.3	3.4	4.1	4.2	4.3	5.1	5.2	5.3	6.1	6.2	6.3	6.4	7.1	7.2	7.3	7.4
		8.1	8.2																		
	•	1.1	1.2	1.3	1.4																

B442 HM DIN 8051 A H7

B442

10.00 - 20.00

d_1 Ø mm	l_1 mm	l_2 mm	l_3 mm	z	MK	B442
10.0	168	19	102.5	6	1	B44210.0
12.0	182	19	116.5	6	1	B44212.0
14.0	189	19	123.5	6	1	B44214.0
15.0	204	19	124	6	2	B44215.0
16.0	210	22	130	6	2	B44216.0
17.0	214	22	134	6	2	B44217.0
18.0	219	22	139	6	2	B44218.0
19.0	223	22	143	6	2	B44219.0
20.0	228	22	148	6	2	B44220.0

B100

- 手用铰刀
- Alargador Manual
- Escariador de mano
- Hand Reamer

d2 = d1, 公差为 e9
d2=d1 com tolerância e9
d2=d1 Tolerancia e9
d2=d1 with tolerance e9

B100 ▪ 1.1 1.2 1.3 1.4 2.1 3.1 4.1 6.2
• 1.5 1.6 3.2 3.3 3.4 4.2 4.3 5.1 5.2 5.3 6.1 6.3 6.4 7.1 7.2 8.2

B100 HSS ST DIN 206 B H7

B100

1.50 - 50.00

d_1 Ø Inch	d_1 Ø mm	l_1 mm	l_2 mm	l_3 mm	z	a mm	B100
	1.50	41	20	5	3	1.12	B1001.5
1/16	1.59	41	20	5	3	1.12	B1001/16
	1.60	44	21	5	3	1.25	B1001.6
5/64	1.98	47	23	6	4	1.40	B1005/64
	2.00	50	25	6	4	1.60	B1002.0
3/32	2.38	54	27	7	4	1.80	B1003/32
	2.50	58	29	7	4	2.10	B1002.5
7/64	2.78	62	31	8	6	2.10	B1007/64
	3.00	62	31	8	6	2.40	B1003.0
1/8	3.18	66	33	8	6	2.40	B1001/8
	3.20	66	33	8	6	2.40	B1003.2
	3.50	71	35	9	6	2.70	B1003.5
9/64	3.57	71	35	9	6	2.70	B1009/64
5/32	3.97	76	38	10	6	3.00	B1005/32
	4.00	76	38	10	6	3.00	B1004.0
11/64	4.37	81	41	10	6	3.40	B10011/64
	4.50	81	41	10	6	3.40	B1004.5
3/16	4.76	87	44	11	6	3.80	B1003/16
	5.00	87	44	11	6	3.80	B1005.0
13/64	5.16	87	44	11	6	3.80	B10013/64
	5.50	93	47	12	6	4.30	B1005.5
7/32	5.56	93	47	12	6	4.30	B1007/32
15/64	5.95	93	47	12	6	4.90	B10015/64
	6.00	93	47	12	6	4.90	B1006.0
1/4	6.35	100	50	13	6	4.90	B1001/4
	6.50	100	50	13	6	4.90	B1006.5
17/64	6.75	107	54	14	6	5.50	B10017/64
	7.00	107	54	14	6	5.50	B1007.0
9/32	7.14	107	54	14	6	6.20	B1009/32
	7.50	107	54	14	6	6.20	B1007.5
19/64	7.54	115	58	15	6	6.20	B10019/64
5/16	7.94	115	58	15	6	6.20	B1005/16
	8.00	115	58	15	6	6.20	B1008.0
21/64	8.33	115	58	15	6	7.00	B10021/64
	8.50	115	58	15	6	7.00	B1008.5
11/32	8.73	124	62	16	6	7.00	B10011/32
	9.00	124	62	16	6	7.00	B1009.0
23/64	9.13	124	62	16	6	8.00	B10023/64
	9.50	124	62	16	6	8.00	B1009.5
3/8	9.52	124	62	17	6	8.00	B1003/8

d_1 Ø Inch	d_1 Ø mm	l_1 mm	l_2 mm	l_3 mm	z	◪ a mm	B100
25/64	9.92	133	66	17	6	8.00	B10025/64
	10.00	133	66	17	6	8.00	B10010.0
13/32	10.32	133	66	17	6	8.00	B10013/32
	10.50	133	66	17	6	8.00	B10010.5
	11.00	142	71	18	6	9.00	B10011.0
7/16	11.11	142	71	18	6	9.00	B1007/16
	11.50	142	71	18	6	9.00	B10011.5
	12.00	152	76	19	6	9.00	B10012.0
	12.50	152	76	19	6	10.00	B10012.5
1/2	12.70	152	76	19	6	10.00	B1001/2
	13.00	152	76	19	6	10.00	B10013.0
17/32	13.49	163	81	20	8	11.00	B10017/32
	13.50	163	81	20	8	11.00	B10013.5
	14.00	163	81	20	8	11.00	B10014.0
9/16	14.29	163	81	20	8	11.00	B1009/16
	14.50	163	81	20	8	11.00	B10014.5
	15.00	163	81	20	8	12.00	B10015.0
19/32	15.08	163	81	22	8	12.00	B10019/32
5/8	15.88	175	87	22	8	12.00	B1005/8
	16.00	175	87	22	8	12.00	B10016.0
	17.00	175	87	22	8	13.00	B10017.0
11/16	17.46	188	93	23	8	14.50	B10011/16
	18.00	188	93	23	8	14.50	B10018.0
	19.00	188	93	23	8	14.50	B10019.0
3/4	19.05	188	93	25	8	14.50	B1003/4
	20.00	201	100	25	8	16.00	B10020.0
13/16	20.64	201	100	25	8	16.00	B10013/16
	21.00	201	100	25	8	16.00	B10021.0
	22.00	215	107	27	8	18.00	B10022.0
7/8	22.22	215	107	27	8	18.00	B1007/8
	23.00	215	107	27	8	18.00	B10023.0
	24.00	231	115	29	8	18.00	B10024.0
	25.00	231	115	29	8	20.00	B10025.0
1“	25.40	231	115	29	8	20.00	B1001
	26.00	231	115	29	8	20.00	B10026.0
	27.00	247	124	31	10	22.00	B10027.0
	28.00	247	124	31	10	22.00	B10028.0
	29.00	247	124	31	10	22.00	B10029.0
	30.00	247	124	31	10	24.00	B10030.0
	31.00	265	133	33	10	24.00	B10031.0
	32.00	265	133	33	10	24.00	B10032.0
	33.00	265	133	33	10	26.00	B10033.0
	34.00	284	142	36	10	26.00	B10034.0
	35.00	284	142	36	10	29.00	B10035.0
	36.00	284	142	36	10	29.00	B10036.0
	37.00	284	142	36	10	29.00	B10037.0
	38.00	305	152	38	10	29.00	B10038.0
	39.00	305	152	38	10	32.00	B10039.0
	40.00	305	152	38	10	32.00	B10040.0
	45.00	326	163	41	12	35.00	B10045.0
	50.00	347	174	44	12	39.00	B10050.0

B334

- 手用快调铰刀
- Alargador Manual Ajuste Rápido
- Escariador de mano extensible
- Hand Reamer Quickly Adjustable

B334																	
	■	1.1	1.2	1.3	1.4	2.1	3.1	4.1	6.2								
	•	1.5	1.6	3.2	3.3	3.4	4.2	4.3	5.1	5.2	5.3	6.1	6.3	6.4	7.1	7.2	8.2

B334 HSS

B334

N000 - N16

Nr.	d min-max mm	l_1 mm	l_2 mm	l_3 mm	z	◪ a mm	B334
000	6.4 - 7.2	110	32	7	4	3.0	B334000
00	7.2 - 8.0	110	32	7	4	3.4	B33400
0	8.0 - 9.0	115	34	9	5	3.8	B3340
1	9.0 - 10.0	115	34	9	5	4.3	B3341
2	10.0 - 11.0	115	34	9	5	4.9	B3342
3	11.0 - 12.0	125	35	9	5	4.9	B3343
4	12.0 - 13.5	135	41	9	5	6.2	B3344
5	13.5 - 15.5	146	50	12	5	7.0	B3345
6	15.5 - 18.0	166	60	12	5	8.0	B3346
7	18.0 - 21.0	178	65	15	5	9.0	B3347
8	21.0 - 24.0	195	76	15	5	11.0	B3348
9	24.0 - 27.5	218	82	18	5	12.0	B3349
10	27.5 - 31.5	245	86	18	5	14.5	B33410
11	31.5 - 37.0	280	98	18	6	18.0	B33411
12	37.0 - 45.0	325	108	20	6	20.0	B33412
13	45.0 - 55.0	370	118	20	6	26.0	B33413
14	55.0 - 67.0	400	125	20	6	32.0	B33414
15	67.0 - 80.0	435	140	23	8	39.0	B33415
16	80.0 - 95.0	475	155	23	8	49.0	B33416

B335

- 手用快调铰刀配件 (B334)
- Alargador Manual Ajuste Rápido - Acessórios (B334)
- Accesorios para el porta-escariador tipo B334
- Hand Reamer Quickly Adjustable - Spare Parts (B334)

B335 HSS

BLADES

NUT

B335

N000BLADES - N16NUT

Nr.	B335
000	B335000BLADES
000	B335000NUT
00	B33500BLADES
00	B33500NUT
0	B3350BLADES
0	B3350NUT
1	B3351BLADES
1	B3351NUT
2	B3352BLADES
2	B3352NUT
3	B3353BLADES
3	B3353NUT
4	B3354BLADES
4	B3354NUT
5	B3355BLADES
5	B3355NUT
6	B3356BLADES
6	B3356NUT
7	B3357BLADES
7	B3357NUT
8	B3358BLADES
8	B3358NUT
9	B3359BLADES
9	B3359NUT
10	B33510BLADES
10	B33510NUT
11	B33511BLADES
11	B33511NUT
12	B33512BLADES
12	B33512NUT
13	B33513BLADES
13	B33513NUT
14	B33514BLADES
14	B33514NUT
15	B33515BLADES
15	B33515NUT
16	B33516BLADES
16	B33516NUT

B901

- 机用铰刀 — d2 = d1 - 0.025
- Alargador Máquina — d2=d1 - 0.025
- Escariador de máquina — d2=d1 - 0.025
- Machine Reamer — d2=d1 - 0.025

B901 ▪ 1.1 1.2 1.3 1.4 2.1 3.1 4.1 6.2

• 1.5 1.6 3.2 3.3 3.4 4.2 4.3 5.1 5.2 5.3 6.1 6.3 6.4 7.1 7.2 8.2

B901 HSS-E ST BS 328 B H7

B901

1.50 - 1/2

d_1 Ø Inch	d_1 Ø mm	l_1 mm	l_2 mm	z	B901
	1.50	44	21	4	B9011.5
1/16	1.59	44	21	4	B9011/16
	2.00	50	25	4	B9012.0
3/32	2.38	58	29	4	B9013/32
	2.50	58	29	4	B9012.5
	3.00	62	31	4	B9013.0
1/8	3.18	66	33	4	B9011/8
	3.50	71	35	4	B9013.5
5/32	3.97	76	38	6	B9015/32
	4.00	76	38	6	B9014.0
	4.50	81	41	6	B9014.5
3/16	4.76	87	44	6	B9013/16
	5.00	87	44	6	B9015.0
13/64	5.16	87	44	6	B90113/64
	5.50	93	47	6	B9015.5
7/32	5.56	93	47	6	B9017/32
15/64	5.95	93	47	6	B90115/64
	6.00	93	47	6	B9016.0
1/4	6.35	100	50	6	B9011/4
	7.00	107	54	6	B9017.0
9/32	7.14	107	54	6	B9019/32
5/16	7.94	115	58	6	B9015/16
	8.00	115	58	6	B9018.0
	9.00	124	62	6	B9019.0
3/8	9.52	133	66	6	B9013/8
	10.00	133	66	6	B90110.0
	11.00	142	71	6	B90111.0
7/16	11.11	142	71	6	B9017/16
	12.00	152	76	6	B90112.0
1/2	12.70	152	76	6	B9011/2

B301

- 手用锥销铰刀
- Alargador Manual para Pino Cônico
- Escariador de mano para pasadores cónicos
- Hand Taper Pin Reamer

B301																			
	■	1.1	1.2	1.3	1.4	2.1	3.1	4.1	6.2										
	•	1.5	1.6	2.2	2.3	3.2	3.3	3.4	4.2	4.3	5.1	6.1	6.3	6.4	7.1	7.2	7.3	7.4	8.2

B301 HSS ST BS 328 A 1:48

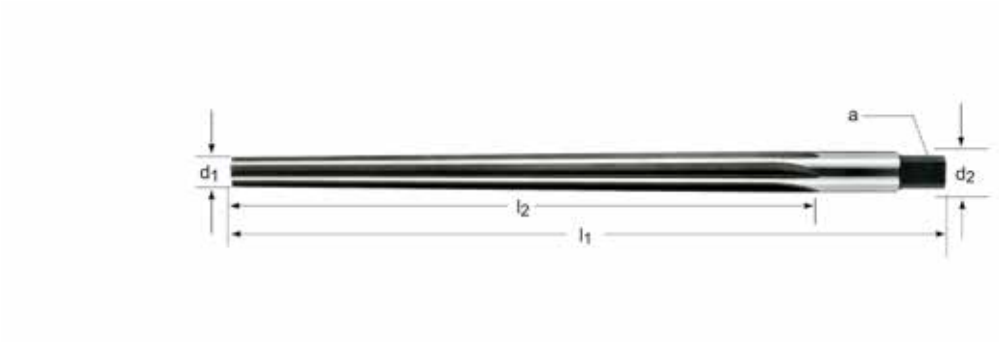

B301

1/16 - 1/2

nom Ø	d_1 Ø mm	l_1 mm	l_2 mm	z	◪ a mm	d_2 Ø mm	B301
1/16	1.10	51	25	4	1.2	1.63	B3011/16 [4]
5/64	1.50	51	25	4	1.6	2.03	B3015/64 [4]
3/32	1.75	57	32	4	2.0	2.41	B3013/32 [4]
7/64	2.03	64	38	4	2.2	2.82	B3017/64 [4]
1/8	2.30	70	44	4	2.5	3.23	B3011/8 [4]
9/64	2.64	73	48	4	2.8	3.63	B3019/64 [4]
5/32	2.95	76	51	4	3.1	4.01	B3015/32 [4]
11/64	3.23	89	57	4	3.6	4.42	B30111/64 [4]
3/16	3.50	102	70	4	4.0	4.95	B3013/16 [4]
7/32	4.13	102	70	6	4.5	5.59	B3017/32 [4]
1/4	4.64	117	86	6	5.0	6.43	B3011/4 [5]
9/32	5.23	143	105	6	5.6	7.42	B3019/32 [5]
5/16	5.84	143	105	6	6.3	8.03	B3015/16 [5]
11/32	6.43	152	114	6	7.1	8.81	B30111/32 [5]
3/8	7.03	165	127	6	8.0	9.68	B3013/8 [5]
13/32	7.42	191	146	6	8.0	10.46	B30113/32 [5]
7/16	8.21	191	146	6	9.0	11.25	B3017/16 [5]
1/2	9.41	210	165	6	10.0	12.85	B3011/2 [5]

[4] 公差极限 + 0.0030 / Limite de tolerância +0.0030 / Límite de tolerancia +0.0030 / Limit of tolerance +0.0030
[5] 公差极限 + 0.0050 / Limite de tolerância +0.0050 / Límite de tolerancia +0.0050 / Limit of tolerance +0.0050

B903

- 手用锥销铰刀
- Alargador Manual para Pino Cônico
- Escariador de mano para pasadores cónicos
- Hand Taper Pin Reamer

B903																			
▪	1.1	1.2	1.3	1.4	2.1	3.1	4.1	6.2											
•	1.5	1.6	2.2	2.3	3.2	3.3	3.4	4.2	4.3	5.1	6.1	6.3	6.4	7.1	7.2	7.3	7.4	8.2	

B903 HSS ST DIN 9 A 1:50

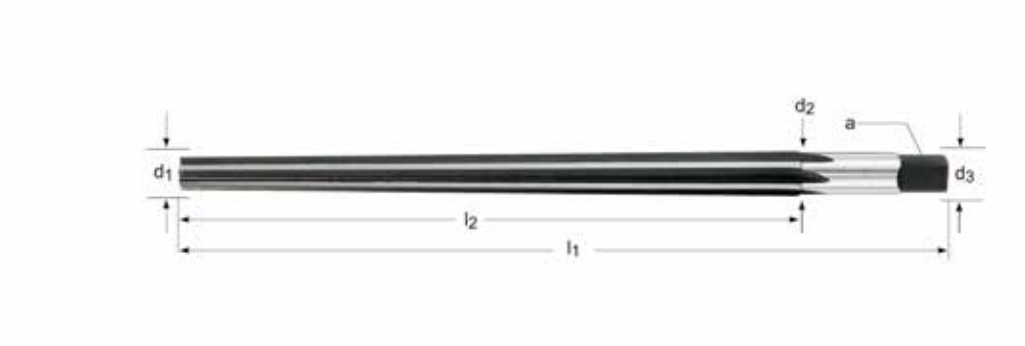

B903

1.50 - 20.00

nom Ø	d_1 Ø mm	d_2 Ø mm	l_1 mm	l_2 mm	z	◪ a mm	d_3 Øh_{11} mm	B903
1.5	1.40	2.14	57	37	4	1.80	2.14	B9031.5 [6]
2.0	1.90	2.86	68	48	4	2.24	2.86	B9032.0 [6]
2.5	2.40	3.36	68	48	4	2.80	3.36	B9032.5 [6]
3.0	2.90	4.06	80	58	4	3.15	4.00	B9033.0 [6]
4.0	3.90	5.26	93	68	4	4.00	5.00	B9034.0 [6]
5.0	4.90	6.36	100	73	4	5.00	6.30	B9035.0 [6]
6.0	5.90	8.00	135	105	6	6.30	7.90	B9036.0 [7]
8.0	7.90	10.80	180	145	6	8.00	10.50	B9038.0 [7]
10.0	9.90	13.40	215	175	6	10.00	13.30	B90310.0 [7]
12.0	11.80	16.00	255	210	8	11.20	16.00	B90312.0 [7]
13.0	12.86	16.74	255	210	8	12.50	16.74	B90313.0 [7]
14.0	13.86	17.74	255	210	8	12.50	17.74	B90314.0 [7]
16.0	15.80	20.40	280	230	8	14.00	20.40	B90316.0 [7]
20.0	19.80	24.80	310	250	8	18.00	24.80	B90320.0 [7]

[6] 公差极限 + 0.0750 / Limite de tolerância +0.0750 / Límite de tolerancia +0.0750 / Limit of tolerance +0.0750
[7] 公差极限 + 0.125 / Limite de tolerância +0.125 / Límite de tolerancia +0.125 / Limit of tolerance +0.125

B952

- 手用锥销铰刀
- Alargador Manual para Pino Cônico
- Escariador de mano para pasadores cónicos
- Hand Taper Pin Reamer

B952																			
	■	1.1	1.2	1.3	1.4	2.1	3.1	4.1	6.2										
	•	1.5	1.6	2.2	2.3	3.2	3.3	3.4	4.2	4.3	5.1	6.1	6.3	6.4	7.1	7.2	7.3	7.4	8.2

B952 HSS DIN 9 B 1:50

B952

1.20 - 50.00

nom Ø	d_1 Ø mm	d_2 Ø mm	l_1 mm	l_2 mm	z	a mm	d_3 Øh_{11} mm	B952
1.2	1.1	1.74	50	32	3	2.4	3.15	B9521.2 [8]
1.5	1.4	2.14	57	37	3	2.4	3.15	B9521.5 [8]
2.0	1.9	2.86	68	48	3	2.4	3.15	B9522.0 [8]
2.5	2.4	3.36	68	48	4	2.4	3.15	B9522.5 [8]
3.0	2.9	4.06	80	58	5	3.0	4.00	B9523.0
3.5	3.4	4.66	87	63	5	3.4	4.50	B9523.5
4.0	3.9	5.26	93	68	5	3.8	5.00	B9524.0
4.5	4.4	5.80	95	70	5	4.3	5.60	B9524.5
5.0	4.9	6.36	100	73	5	4.9	6.30	B9525.0
5.5	5.4	7.20	118	90	6	5.5	7.10	B9525.5
6.0	5.9	8.00	135	105	6	6.2	8.00	B9526.0
6.5	6.4	8.60	140	110	6	6.2	8.00	B9526.5
7.0	6.9	9.40	160	125	6	7.0	9.00	B9527.0
8.0	7.9	10.8	180	145	6	8.0	10.00	B9528.0
9.0	8.9	12.1	195	160	6	9.0	11.20	B9529.0
10.0	9.9	13.4	215	175	6	10.0	12.50	B95210.0
12.0	11.8	16.0	255	210	8	11.0	14.00	B95212.0
13.0	12.8	17.0	255	210	8	12.0	16.00	B95213.0
14.0	13.8	18.0	255	210	8	12.0	16.00	B95214.0
16.0	15.8	20.4	280	230	8	14.5	18.00	B95216.0
20.0	19.8	24.8	310	250	8	18.0	22.40	B95220.0
25.0	24.7	30.7	370	300	10	22.0	28.00	B95225.0
30.0	29.7	36.1	400	320	10	24.0	31.50	B95230.0
40.0	39.7	46.5	430	340	12	32.0	40.00	B95240.0
50.0	49.7	56.9	460	360	12	39.0	50.00	B95250.0

[8] 直槽, A 型 / Canal Reto, forma A / Estrias rectas, forma A / Straight Flute, form A

B122

- 左螺旋槽铰刀
- Alargador Piloto Canal Helicoidal
- Escariadores de máquina cilíndricos, hélice a izquierda
- Straight Car Reamers, LH Helical Flute

B122																			
▪	1.1	1.2	1.3	1.4	2.1	3.1	4.1	6.2											
•	1.5	1.6	2.2	2.3	3.2	3.3	3.4	4.2	4.3	5.1	6.1	6.3	6.4	7.1	7.2	7.3	7.4	8.2	

B122 HSS ST Bronze ANSI

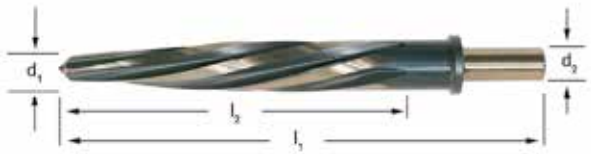

B122

3/8 - 1.1/16

d_1 Ø Inch	d_1 decimal Inch	l_1 Inch	l_2 Inch	z	d_2 Ø Inch	B122
3/8	0.3750	4.5/8	2.1/2	4	3/8	B1223/8
1/2	0.5000	5.7/8	3.3/4	5	1/2	B1221/2
9/16	0.5625	5.7/8	3.3/4	5	1/2	B1229/16
5/8	0.6250	6.3/8	4.1/4	5	1/2	B1225/8
11/16	0.6875	6.3/8	4.1/4	5	1/2	B12211/16
3/4	0.7500	6.7/8	4.1/2	5	1/2	B1223/4
13/16	0.8125	6.7/8	4.1/2	5	1/2	B12213/16
7/8	0.8750	6.7/8	4.1/2	5	1/2	B1227/8
15/16	0.9375	6.7/8	4.1/2	5	1/2	B12215/16
1“	1.0000	6.7/8	4.1/2	5	1/2	B1221
1.1/16	1.0625	6.7/8	4.1/2	5	1/2	B1221.1/16

B953

- 45度左旋机用铰刀
- Alargador Máquina para pinos cônicos com corte a esquerda - Hélice 45°
- Escariador de máquina para pasadores cónicos Hélice a izquierdas 45°
- Machine Reamer for Conical Pin Left Hand Helix 45°

扁尾符合 DIN 1809
Arraste de acordo com a DIN 1809
Lengüeta según DIN 1809
Tang to DIN 1809

B953																
	■	2.1	2.2	2.3	4.1	4.2	4.3	5.1	5.2	5.3	6.1	7.1	7.2	7.3	7.4	8.1
	•	1.1	1.2	1.3	1.4	1.5	1.6	6.2	9.1							

B953 HSS-E DIN 2179 1:50

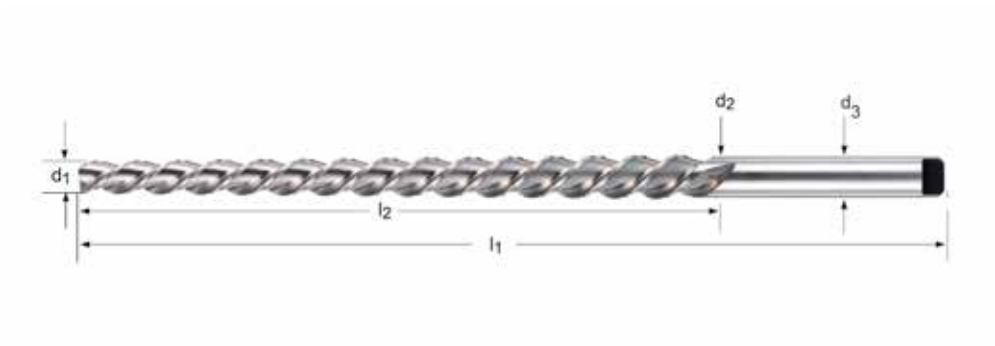

B953

1.00 - 12.00

nom Ø	d_1 Ø mm	d_2 Ø mm	l_1 mm	l_2 mm	z	d_3 Øh_9 mm	B953
1.0	0.8	1.46	60	33	2	1.4	B9531.0
1.5	1.4	2.14	70	37	2	2.1	B9531.5
2.0	1.9	2.86	86	48	3	3.15	B9532.0
2.5	2.4	3.36	86	48	3	3.15	B9532.5
3.0	2.9	4.06	100	58	3	4.0	B9533.0
4.0	3.9	5.26	112	68	3	5.0	B9534.0
5.0	4.9	6.36	122	73	3	6.3	B9535.0
6.0	5.9	8.00	160	105	3	8.0	B9536.0
6.5	6.4	8.78	188	119	3	8.5	B9536.5
8.0	7.9	10.80	207	145	3	10.0	B9538.0
10.0	9.9	13.40	245	175	3	12.5	B95310.0
12.0	11.8	16.00	290	210	3	16.0	B95312.0

DORMER

B180

- NC-用于高精度夹头的铰刀
- NC - Alargador para mandris de alta precisão
- Escariador para portas de alta precision
- NC - Reamer for High Precision Chucks

B180																		
■	1.1	1.2	1.3	1.4	2.1	4.2	5.1											
•	1.5	1.6	2.2	2.3	2.4	3.1	3.2	3.3	3.4	4.1	4.3	5.2	5.3	6.1	6.2	6.3	6.4	

B180 HSS-E DIN 212 DIN 6535HA B H7

B180

1.50 - 20.0

d_1 Ø mm	l_1 mm	l_2 mm	l_3 mm	z	d_2 Øh_6 mm	B180
1.5	40	8	18	3	2	B1801.5
1.6	43	9	20	3	2	B1801.6
1.7	43	9	20	3	2	B1801.7
1.8	46	10	22	4	2	B1801.8
1.9	46	10	22	4	2	B1801.9
2.0	49	11	24	4	2	B1802.0
2.1	49	11	24	4	2	B1802.1
2.2	53	12	26	4	3	B1802.2
2.3	53	12	26	4	3	B1802.3
2.4	57	14	28	4	3	B1802.4
2.5	57	14	28	4	3	B1802.5
2.6	57	14	28	4	3	B1802.6
2.7	61	15	32	6	3	B1802.7
2.8	61	15	32	6	3	B1802.8
2.9	61	15	32	6	3	B1802.9
3.0	61	15	32	6	3	B1803.0
3.1	65	16	35	6	4	B1803.1
3.2	65	16	35	6	4	B1803.2
3.3	65	16	35	6	4	B1803.3
3.4	70	18	40	6	4	B1803.4
3.5	70	18	40	6	4	B1803.5
3.6	70	18	40	6	4	B1803.6
3.7	70	18	40	6	4	B1803.7
3.8	75	19	43	6	4	B1803.8
3.9	75	19	43	6	4	B1803.9
4.0	75	19	43	6	4	B1804.0
4.1	75	19	43	6	4	B1804.1
4.2	75	19	43	6	4	B1804.2
4.3	80	21	47	6	5	B1804.3
4.4	80	21	47	6	5	B1804.4
4.5	80	21	47	6	5	B1804.5
4.6	80	21	47	6	5	B1804.6
4.7	80	21	47	6	5	B1804.7
4.8	86	23	52	6	5	B1804.8
4.9	86	23	52	6	5	B1804.9
5.0	86	23	52	6	5	B1805.0
5.1	86	23	52	6	5	B1805.1
5.2	86	23	52	6	5	B1805.2
5.3	86	23	52	6	5	B1805.3
5.4	93	26	57	6	6	B1805.4

d_1 Ø mm	l_1 mm	l_2 mm	l_3 mm	z	d_2 Øh_6 mm	B180
5.5	93	26	57	6	6	B1805.5
5.6	93	26	57	6	6	B1805.6
5.7	93	26	57	6	6	B1805.7
5.8	93	26	57	6	6	B1805.8
5.9	93	26	57	6	6	B1805.9
6.0	93	26	57	6	6	B1806.0
6.1	101	28	63	6	6	B1806.1
6.2	101	28	63	6	6	B1806.2
6.3	101	28	63	6	6	B1806.3
6.4	101	28	63	6	6	B1806.4
6.5	101	28	63	6	6	B1806.5
6.6	101	28	63	6	6	B1806.6
6.7	101	28	63	6	6	B1806.7
6.8	109	31	69	6	8	B1806.8
6.9	109	31	69	6	8	B1806.9
7.0	109	31	69	6	8	B1807.0
7.1	109	31	69	6	8	B1807.1
7.2	109	31	69	6	8	B1807.2
7.3	109	31	69	6	8	B1807.3
7.4	109	31	69	6	8	B1807.4
7.5	109	31	69	6	8	B1807.5
7.6	117	33	75	6	8	B1807.6
7.7	117	33	75	6	8	B1807.7
7.8	117	33	75	6	8	B1807.8
7.9	117	33	75	6	8	B1807.9
8.0	117	33	75	6	8	B1808.0
8.1	117	33	75	6	8	B1808.1
8.2	117	33	75	6	8	B1808.2
8.3	117	33	75	6	8	B1808.3
8.4	117	33	75	6	8	B1808.4
8.5	117	33	75	6	8	B1808.5
8.6	125	36	81	6	10	B1808.6
8.7	125	36	81	6	10	B1808.7
8.8	125	36	81	6	10	B1808.8
8.9	125	36	81	6	10	B1808.9
9.0	125	36	81	6	10	B1809.0
9.1	125	36	81	6	10	B1809.1
9.2	125	36	81	6	10	B1809.2
9.3	125	36	81	6	10	B1809.3
9.4	125	36	81	6	10	B1809.4
9.5	125	36	81	6	10	B1809.5
9.6	133	38	87	6	10	B1809.6
9.7	133	38	87	6	10	B1809.7
9.8	133	38	87	6	10	B1809.8
9.9	133	38	87	6	10	B1809.9
10.0	133	38	87	6	10	B18010.0
11.0	142	41	96	6	10	B18011.0
12.0	151	44	105	6	10	B18012.0
13.0	151	44	105	6	10	B18013.0
14.0	160	47	110	8	14	B18014.0
15.0	162	50	112	8	14	B18015.0
16.0	170	52	120	8	14	B18016.0
17.0	175	54	123	8	14	B18017.0
18.0	182	56	130	8	14	B18018.0
19.0	189	58	131	8	16	B18019.0
20.0	195	60	137	8	16	B18020.0

DORMER

B170

- 以丝为单位的机用铰刀
- Alargador máquina centesimal
- Escariador de máquina centesimal
- Machine Centesimal Reamer

B170																	
▪	1.1	1.2	1.3	1.4	2.1	4.2	5.1										
•	1.5	1.6	2.2	2.3	3.1	3.2	3.3	3.4	4.1	4.3	5.2	5.3	6.1	6.2	6.3	6.4	

B170 HSS-E | DIN 212 | B | Ø.95-5.5 0,+0.004 Ø5.51-12 0,+0.005

B170

0.98 - 12.00

d_1 Ø mm	l_1 mm	l_2 mm	l_3 mm	z	d_2 Øh_9 mm	B170
0.98	34	5.5	15	3	1.0	B170.98
0.99	34	5.5	15	3	1.0	B170.99
1.00	34	5.5	15	3	1.0	B1701.0
1.01	34	5.5	15	3	1.0	B1701.01
1.02	34	5.5	15	3	1.0	B1701.02
1.03	34	5.5	15	3	1.0	B1701.03
1.04	34	5.5	15	3	1.0	B1701.04
1.05	34	5.5	15	3	1.0	B1701.05
1.49	40	8.0	18	3	1.5	B1701.49
1.50	40	8.0	18	3	1.5	B1701.5
1.51	43	9.0	20	3	1.6	B1701.51
1.52	43	9.0	20	3	1.6	B1701.52
1.98	49	11.0	24	4	2.0	B1701.98
1.99	49	11.0	24	4	2.0	B1701.99
2.00	49	11.0	24	4	2.0	B1702.0
2.01	49	11.0	24	4	2.0	B1702.01
2.02	49	11.0	24	4	2.0	B1702.02
2.03	49	11.0	24	4	2.0	B1702.03
2.04	49	11.0	24	4	2.0	B1702.04
2.05	49	11.0	24	4	2.0	B1702.05
2.49	57	14.0	28	4	2.5	B1702.49
2.50	57	14.0	28	4	2.5	B1702.5
2.51	57	14.0	28	4	2.5	B1702.51
2.52	57	14.0	28	4	2.5	B1702.52
2.98	61	15.0	32	6	3.0	B1702.98
2.99	61	15.0	32	6	3.0	B1702.99
3.00	61	15.0	32	6	3.0	B1703.0
3.01	65	16.0	35	6	3.2	B1703.01
3.02	65	16.0	35	6	3.2	B1703.02
3.03	65	16.0	35	6	3.2	B1703.03
3.04	65	16.0	35	6	3.2	B1703.04
3.05	65	16.0	35	6	3.2	B1703.05
3.49	70	18.0	40	6	3.5	B1703.49
3.50	70	18.0	40	6	3.5	B1703.5
3.51	70	18.0	40	6	3.5	B1703.51
3.52	70	18.0	40	6	3.5	B1703.52
3.98	75	19.0	43	6	4.0	B1703.98
3.99	75	19.0	43	6	4.0	B1703.99
4.00	75	19.0	43	6	4.0	B1704.0
4.01	75	19.0	43	6	4.0	B1704.01

d_1 Ø mm	l_1 mm	l_2 mm	l_3 mm	z	d_2 Øh_9 mm	B170
4.02	75	19.0	43	6	4.0	B1704.02
4.03	75	19.0	43	6	4.0	B1704.03
4.04	75	19.0	43	6	4.0	B1704.04
4.05	75	19.0	43	6	4.0	B1704.05
4.49	80	21.0	47	6	4.5	B1704.49
4.50	80	21.0	47	6	4.5	B1704.5
4.51	80	21.0	47	6	4.5	B1704.51
4.52	80	21.0	47	6	4.5	B1704.52
4.98	86	23.0	52	6	5.0	B1704.98
4.99	86	23.0	52	6	5.0	B1704.99
5.00	86	23.0	52	6	5.0	B1705.0
5.01	86	23.0	52	6	5.0	B1705.01
5.02	86	23.0	52	6	5.0	B1705.02
5.03	86	23.0	52	6	5.0	B1705.03
5.04	86	23.0	52	6	5.0	B1705.04
5.05	86	23.0	52	6	5.0	B1705.05
5.49	93	26.0	57	6	5.6	B1705.49
5.50	93	26.0	57	6	5.6	B1705.5
5.51	93	26.0	57	6	5.6	B1705.51
5.52	93	26.0	57	6	5.6	B1705.52
5.98	93	26.0	57	6	5.6	B1705.98
5.99	93	26.0	57	6	5.6	B1705.99
6.00	93	26.0	57	6	5.6	B1706.0
6.01	101	28.0	63	6	6.3	B1706.01
6.02	101	28.0	63	6	6.3	B1706.02
6.03	101	28.0	63	6	6.3	B1706.03
6.04	101	28.0	63	6	6.3	B1706.04
6.05	101	28.0	63	6	6.3	B1706.05
6.49	101	28.0	63	6	6.3	B1706.49
6.50	101	28.0	63	6	6.3	B1706.5
6.51	101	28.0	63	6	6.3	B1706.51
6.52	101	28.0	63	6	6.3	B1706.52
6.98	109	31.0	69	6	7.1	B1706.98
6.99	109	31.0	69	6	7.1	B1706.99
7.00	109	31.0	69	6	7.1	B1707.0
7.01	109	31.0	69	6	7.1	B1707.01
7.02	109	31.0	69	6	7.1	B1707.02
7.03	109	31.0	69	6	7.1	B1707.03
7.04	109	31.0	69	6	7.1	B1707.04
7.05	109	31.0	69	6	7.1	B1707.05
7.49	109	31.0	69	6	7.1	B1707.49
7.50	109	31.0	69	6	7.1	B1707.5
7.51	117	33.0	75	6	8.0	B1707.51
7.52	117	33.0	75	6	8.0	B1707.52
7.98	117	33.0	75	6	8.0	B1707.98
7.99	117	33.0	75	6	8.0	B1707.99
8.00	117	33.0	75	6	8.0	B1708.0
8.01	117	33.0	75	6	8.0	B1708.01
8.02	117	33.0	75	6	8.0	B1708.02
8.03	117	33.0	75	6	8.0	B1708.03
8.04	117	33.0	75	6	8.0	B1708.04
8.05	117	33.0	75	6	8.0	B1708.05
8.49	117	33.0	75	6	8.0	B1708.49
8.50	117	33.0	75	6	8.0	B1708.5
8.51	125	36.0	81	6	9.0	B1708.51
8.52	125	36.0	81	6	9.0	B1708.52
8.98	125	36.0	81	6	9.0	B1708.98
8.99	125	36.0	81	6	9.0	B1708.99
9.00	125	36.0	81	6	9.0	B1709.0
9.01	125	36.0	81	6	9.0	B1709.01
9.02	125	36.0	81	6	9.0	B1709.02
9.03	125	36.0	81	6	9.0	B1709.03
9.04	125	36.0	81	6	9.0	B1709.04
9.05	125	36.0	81	6	9.0	B1709.05
9.49	125	36.0	81	6	9.0	B1709.49
9.50	125	36.0	81	6	9.0	B1709.5
9.51	133	38.0	87	6	10.0	B1709.51
9.52	133	38.0	87	6	10.0	B1709.52
9.98	133	38.0	87	6	10.0	B1709.98
9.99	133	38.0	87	6	10.0	B1709.99

d_1 Ø mm	l_1 mm	l_2 mm	l_3 mm	z	d_2 Øh_9 mm	B170
10.00	133	38.0	87	6	10.0	B17010.0
10.01	133	38.0	87	6	10.0	B17010.01
10.02	133	38.0	87	6	10.0	B17010.02
10.03	133	38.0	87	6	10.0	B17010.03
10.04	133	38.0	87	6	10.0	B17010.04
10.05	133	38.0	87	6	10.0	B17010.05
10.49	133	38.0	87	6	10.0	B17010.49
10.50	133	38.0	87	6	10.0	B17010.5
10.51	133	38.0	87	6	10.0	B17010.51
10.52	133	38.0	87	6	10.0	B17010.52
10.98	142	41.0	96	6	10.0	B17010.98
10.99	142	41.0	96	6	10.0	B17010.99
11.00	142	41.0	96	6	10.0	B17011.0
11.01	142	41.0	96	6	10.0	B17011.01
11.02	142	41.0	96	6	10.0	B17011.02
11.03	142	41.0	96	6	10.0	B17011.03
11.04	142	41.0	96	6	10.0	B17011.04
11.05	142	41.0	96	6	10.0	B17011.05
11.49	142	41.0	96	6	10.0	B17011.49
11.50	142	41.0	96	6	10.0	B17011.5
11.51	142	41.0	96	6	10.0	B17011.51
11.52	142	41.0	96	6	10.0	B17011.52
11.98	151	44.0	105	6	10.0	B17011.98
11.99	151	44.0	105	6	10.0	B17011.99
12.00	151	44.0	105	6	10.0	B17012.0

B157

- 45 度左螺旋机用铰刀
- Alargador Máquina com corte a esquerda - Hélice 45°
- Escariador de máquina Hélice a izquierdas 45°
- Machine Reamer Left Hand Helix 45°

B157																				
	■	1.1	1.2	1.3	1.4	2.1	2.2	2.3	4.1	4.2	4.3	5.1	5.2	5.3	6.1	7.1	7.2	7.3	7.4	8.1
	•	1.5	1.6	6.2	9.1															

B157 HSS-E DIN 212 E H7

B157

2.00 - 20.00

d_1 Ø mm	l_1 mm	l_2 mm	l_3 mm	l_4 mm	z	d_2 Øh_9 mm	B157
2.0	49	11	3.5	24	3	2.0	B1572.0
3.0	61	15	4.0	32	3	3.0	B1573.0
4.0	75	19	4.0	43	3	4.0	B1574.0
5.0	86	23	4.5	52	3	5.0	B1575.0
6.0	93	26	6.0	57	3	5.6	B1576.0
7.0	109	31	7.0	69	3	7.1	B1577.0
8.0	117	33	9.0	75	3	8.0	B1578.0
9.0	125	36	9.5	81	3	9.0	B1579.0
10.0	133	38	10.0	87	3	10.0	B15710.0
11.0	142	41	10.5	96	3	10.0	B15711.0
12.0	151	44	11.0	105	3	10.0	B15712.0
13.0	151	44	11.5	105	3	10.0	B15713.0
14.0	160	47	12.0	110	3	12.5	B15714.0
15.0	162	50	12.5	112	3	12.5	B15715.0
16.0	170	52	13.0	120	3	12.5	B15716.0
17.0	175	54	13.5	123	3	14.0	B15717.0
18.0	182	56	14.0	130	3	14.0	B15718.0
19.0	189	58	14.5	131	3	16.0	B15719.0
20.0	195	60	15.0	137	3	16.0	B15720.0

B161

- 机用铰刀
- Alargador Máquina
- Escariador de máquina
- Machine Reamer

B161																	
▪	1.1	1.2	1.3	1.4	2.1	4.1	5.1										
•	1.5	1.6	2.2	2.3	3.1	3.2	3.3	3.4	4.2	4.3	5.2	5.3	6.1	6.2	6.3	6.4	

B161 HSS-E | DIN 208 | B | H7

B161

3.00 - 50.00

d_1 Ø mm	l_1 mm	l_2 mm	l_3 mm	z	MK	B161
3.0	113	15	47.5	6	1	B1613.0
4.0	124	19	58.5	6	1	B1614.0
5.0	133	23	67.5	6	1	B1615.0
6.0	138	26	72.5	6	1	B1616.0
7.0	150	31	84.5	6	1	B1617.0
8.0	156	33	90.5	6	1	B1618.0
9.0	162	36	96.5	6	1	B1619.0
10.0	168	38	102.5	6	1	B16110.0
11.0	175	41	109.5	6	1	B16111.0
12.0	182	44	116.5	6	1	B16112.0
13.0	182	44	116.5	6	1	B16113.0
14.0	189	47	123.5	8	1	B16114.0
15.0	204	50	124	8	2	B16115.0
16.0	210	52	130	8	2	B16116.0
17.0	214	54	134	8	2	B16117.0
18.0	219	56	139	8	2	B16118.0
19.0	223	58	143	8	2	B16119.0
20.0	228	60	148	8	2	B16120.0
21.0	232	62	152	8	2	B16121.0
22.0	237	64	157	8	2	B16122.0
23.0	241	66	161	8	2	B16123.0
24.0	268	68	169	8	3	B16124.0
25.0	268	68	169	8	3	B16125.0
26.0	273	70	174	8	3	B16126.0
27.0	277	71	178	10	3	B16127.0
28.0	277	71	178	10	3	B16128.0
29.0	281	73	182	10	3	B16129.0
30.0	281	73	182	10	3	B16130.0
31.0	285	75	186	10	3	B16131.0
32.0	317	77	193	10	4	B16132.0
33.0	317	77	193	10	4	B16133.0
34.0	321	78	197	10	4	B16134.0
35.0	321	78	197	10	4	B16135.0
36.0	325	79	201	10	4	B16136.0
38.0	329	81	205	10	4	B16138.0
40.0	329	81	205	10	4	B16140.0
42.0	333	82	209	12	4	B16142.0
44.0	336	83	212	12	4	B16144.0

d_1 Ø mm	l_1 mm	l_2 mm	l_3 mm	z	MK	B161
45.0	336	83	212	12	4	B16145.0
46.0	340	84	216	12	4	B16146.0
47.0	340	84	216	12	4	B16147.0
48.0	344	86	220	12	4	B16148.0
50.0	344	86	220	12	4	B16150.0

B101

- 机用铰刀
- Alargador Máquina
- Escariador de máquina
- Machine Reamer

B101 ▪ 1.1 1.2 1.3 1.4 2.1 3.1 4.1 6.2

• 1.5 1.6 3.2 3.3 3.4 4.2 4.3 5.1 5.2 5.3 6.1 6.3 6.4 7.1 7.2 8.2

B101 HSS-E ST BS 328 B H7

B101

3.00 - 2"

d_1 Ø Inch	d_1 Ø mm	l_1 mm	l_2 mm	z	MK	B101
	3.00	112	33	4	1	B1013.0
1/8	3.18	112	33	4	1	B1011/8
	3.50	115	35	6	1	B1013.5
	4.00	117	38	6	1	B1014.0
	4.50	120	41	6	1	B1014.5
3/16	4.76	124	44	6	1	B1013/16
	5.00	124	44	6	1	B1015.0
	5.50	127	47	6	1	B1015.5
	6.00	127	47	6	1	B1016.0
1/4	6.35	130	50	6	1	B1011/4
	6.50	130	50	6	1	B1016.5
	7.00	134	54	6	1	B1017.0
5/16	7.94	138	58	6	1	B1015/16
	8.00	138	58	6	1	B1018.0
	8.50	138	58	6	1	B1018.5
	9.00	142	62	6	1	B1019.0
	9.50	142	62	6	1	B1019.5
3/8	9.52	146	66	6	1	B1013/8
	10.00	146	66	6	1	B10110.0
	10.50	146	66	6	1	B10110.5
	11.00	151	71	6	1	B10111.0
7/16	11.11	151	71	6	1	B1017/16
	12.00	156	76	6	1	B10112.0
	12.50	156	76	6	1	B10112.5
1/2	12.70	156	76	6	1	B1011/2
	13.00	156	76	6	1	B10113.0
	13.50	161	81	6	1	B10113.5
	14.00	161	81	8	1	B10114.0
9/16	14.29	181	81	8	2	B1019/16
	14.50	181	81	8	2	B10114.5
	15.00	181	81	8	2	B10115.0
	15.50	187	87	8	2	B10115.5
5/8	15.88	187	87	8	2	B1015/8
	16.00	187	87	8	2	B10116.0
	16.50	187	87	8	2	B10116.5
	17.00	187	87	8	2	B10117.0
	18.00	193	93	8	2	B10118.0
	19.00	193	93	8	2	B10119.0
3/4	19.05	200	100	8	2	B1013/4
	20.00	200	100	8	2	B10120.0

d_1 Ø Inch	d_1 Ø mm	l_1 mm	l_2 mm	z	MK	B101
13/16	20.64	200	100	8	2	B10113/16
	21.00	200	100	8	2	B10121.0
	22.00	207	107	8	2	B10122.0
7/8	22.22	207	107	8	2	B1017/8
	23.00	207	107	8	2	B10123.0
	24.00	242	115	8	3	B10124.0
	25.00	242	115	10	3	B10125.0
1“	25.40	242	115	10	3	B1011
	26.00	242	115	10	3	B10126.0
	27.00	251	124	10	3	B10127.0
	28.00	251	124	10	3	B10128.0
1.1/8	28.58	251	124	10	3	B1011.1/8
	29.00	251	124	10	3	B10129.0
	30.00	251	124	10	3	B10130.0
	31.00	260	133	10	3	B10131.0
1.1/4	31.75	260	133	10	3	B1011.1/4
	32.00	293	133	10	4	B10132.0
	34.00	302	142	10	4	B10134.0
1.3/8	34.93	302	142	10	4	B1011.3/8
	35.00	302	142	10	4	B10135.0
	36.00	302	142	10	4	B10136.0
	37.00	302	142	10	4	B10137.0
	38.00	312	152	10	4	B10138.0
1.1/2	38.10	312	152	10	4	B1011.1/2
	39.00	312	152	10	4	B10139.0
	40.00	312	152	10	4	B10140.0
	41.00	312	152	10	4	B10141.0
	42.00	312	152	10	4	B10142.0
	43.00	323	163	10	4	B10143.0
	44.00	323	163	10	4	B10144.0
1.3/4	44.45	323	163	10	4	B1011.3/4
	45.00	323	163	12	4	B10145.0
	46.00	323	163	12	4	B10146.0
	47.00	323	163	12	4	B10147.0
	48.00	334	174	12	4	B10148.0
	50.00	334	174	12	4	B10150.0
2“	50.80	334	174	12	4	B1012

B121

- 莫氏锥柄扩孔铰刀
- Alargador Cônico com Haste Cônica
- MTS Escariador de mango cónico
- Morse Taper Shank Bridge Reamer

起始锥度 (l3) 为 1:10
Com 1:10 de conicidade inicial
Conicidad 1:10
With 1:10 starting taper (l3)

B121						
■	1.1	1.2	1.3	1.4	3.1	4.1
●	1.5	1.6	3.2	3.3	3.4	8.2

B121 HSS ST DIN 311 k11

B121

10.00 - 30.00

d_1 Ø mm	l_1 mm	l_2 mm	l_3 mm	z	MK	B121
10.0	171	95	30	4	1	B12110.0
11.0	176	100	33	4	1	B12111.0
12.0	199	105	39	4	2	B12112.0
13.0	199	105	39	4	2	B12113.0
14.0	209	115	42	4	2	B12114.0
15.0	219	125	45	4	2	B12115.0
16.0	229	135	48	4	2	B12116.0
17.0	251	135	51	4	3	B12117.0
18.0	261	145	58	4	3	B12118.0
19.0	261	145	58	4	3	B12119.0
20.0	271	155	62	4	3	B12120.0
21.0	271	155	62	4	3	B12121.0
22.0	281	165	66	4	3	B12122.0
23.0	281	165	66	4	3	B12123.0
24.0	296	180	72	4	3	B12124.0
25.0	296	180	72	4	3	B12125.0
26.0	296	180	72	4	3	B12126.0
30.0	311	195	78	5	3	B12130.0

B954

- 45度左旋机用锥度铰刀
- Alargador Máquina para pinos cônicos com corte a esquerda - Hélice 45°
- Escariador de máquina para pasadores cónicos Hélice a izquierdas 45°
- Machine Reamer for Conical Pin Left Hand Helix 45°

B954	▪	2.1	2.2	2.3	4.1	4.2	4.3	5.1	5.2	5.3	6.1	7.1	7.2	7.3	7.4	8.1
	•	1.1	1.2	1.3	1.4	1.5	1.6	6.2	9.1							

B954 HSS-E DIN 2180 1:50

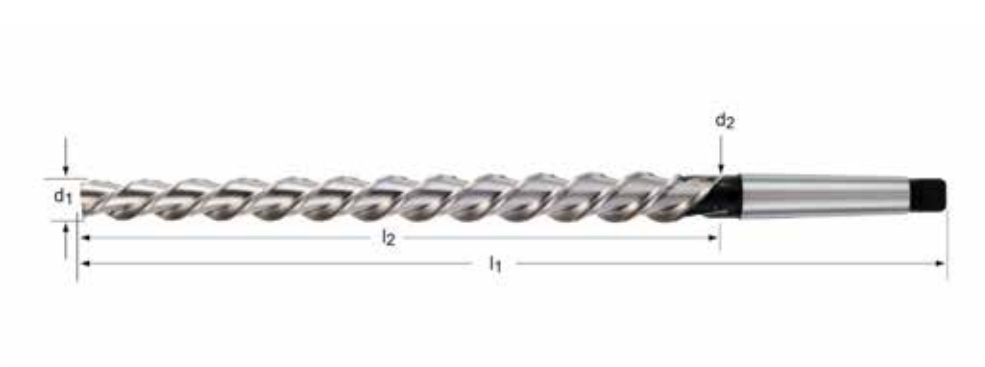

B954

5.00 - 30.00

nom Ø	d_1 Ø mm	d_2 Ø mm	l_1 mm	l_2 mm	z	MK	B954
5.0	4.90	6.36	155	73	3	1	B9545.0
6.0	5.90	8.00	187	105	3	1	B9546.0
8.0	7.90	10.80	227	145	3	1	B9548.0
10.0	9.90	13.40	257	175	3	1	B95410.0
12.0	11.80	16.00	315	210	3	2	B95412.0
13.0	12.86	16.74	295	194	3	2	B95413.0
14.0	13.86	17.74	295	194	3	2	B95414.0
16.0	15.80	20.40	335	230	3	2	B95416.0
20.0	19.80	24.80	377	250	3	3	B95420.0
25.0	24.70	30.70	427	300	3	3	B95425.0
30.0	29.70	36.10	475	320	4	4	B95430.0

B955

- 套式铰刀
- Cabeça Intercambiável de Alargador Caracol
- Escariador hueco
- Shell Reamer

d2 = B956 的标称直径 d1
d2=Diâmetro nominal d1 do B956
d2=Diámetro nominal d1de B956
d2=Nominal diameter d1of B956

B955 ▪ 1.1 1.2 1.3 1.4 2.1 4.1 5.1
• 1.5 1.6 2.2 2.3 3.1 4.2 4.3 5.2 5.3 6.1 6.2 7.1 7.2 7.3 7.4 8.2

B955 HSS-E ST DIN 219 B H7

B955

25.00 - 80.00

d_1 Ø mm	l_1 mm	l_2 mm	z	d_2 Ø mm	B955
25.0	45	32	8	13	B95525.0
26.0	45	32	8	13	B95526.0
27.0	45	32	8	13	B95527.0
28.0	45	32	8	13	B95528.0
29.0	45	32	8	13	B95529.0
30.0	45	32	8	13	B95530.0
31.0	50	36	10	16	B95531.0
32.0	50	36	10	16	B95532.0
34.0	50	36	10	16	B95534.0
35.0	50	36	10	16	B95535.0
36.0	56	40	10	19	B95536.0
37.0	56	40	10	19	B95537.0
38.0	56	40	10	19	B95538.0
40.0	56	40	10	19	B95540.0
42.0	56	40	10	19	B95542.0
44.0	63	45	12	22	B95544.0
45.0	63	45	12	22	B95545.0
48.0	63	45	12	22	B95548.0
50.0	63	45	12	22	B95550.0
52.0	71	50	12	27	B95552.0
55.0	71	50	12	27	B95555.0
58.0	71	50	12	27	B95558.0
60.0	71	50	12	27	B95560.0
65.0	80	56	14	32	B95565.0
70.0	80	56	14	32	B95570.0
75.0	90	63	14	40	B95575.0
80.0	90	63	14	40	B95580.0

B956

- 莫氏锥柄铰刀刀杆（B955）
- Haste Cônica Alargador Caracol (B955)
- Mango cónico Portaescariadores para escariadores huecos
- Morse Taper Shank Shell Reamer Arbor (B955)

B956 HSS-E DIN 217

B956

13.00 - 40.00

d_1 Ø mm	l_1 mm	l_2 mm	l_3 mm	MK	B956
13.0	250	45	151	3	B95613.0
16.0	261	50	162	3	B95616.0
19.0	298	56	174	4	B95619.0
22.0	312	63	188	4	B95622.0
27.0	359	71	203	5	B95627.0
32.0	376	80	220	5	B95632.0
40.0	396	90	240	5	B95640.0

B957

- 套式铰刀心轴配件 (B956)
- Alargador Caracol - Acessório (B956)
- Portaescariadores para escariadores huecos - Accesorios (B956)
- Shell Reamer Arbor - Spare Parts (B956)

B957

N3DRIVER - N9WASHER

Nr.	d	B957
3	13.00	B957N3DRIVER
3		B957N3NUT
3		B957N3WASHER
4	16.00	B957N4DRIVER
4		B957N4NUT
4		B957N4WASHER
5	19.00	B957N5DRIVER
5		B957N5NUT
5		B957N5WASHER
6	22.00	B957N6DRIVER
6		B957N6NUT
6		B957N6WASHER
7	27.00	B957N7DRIVER
7		B957N7NUT
7		B957N7WASHER
8	32.00	B957N8DRIVER
8		B957N8NUT
8		B957N8WASHER
9	40.00	B957N9DRIVER
9		B957N9NUT
9		B957N9WASHER

G400

- 高精密 - 90°锪钻
- Escareador para chanfrar - 90º
- Avellanadores para portas de alta precisión - 90°
- Countersink for High Precision Chucks - 90°

G400															
	■	1.1	1.2	1.3	1.4	1.5	4.1	4.2	4.3	5.1	5.2	5.3	6.1	6.2	6.3
	•	1.6	2.1	2.2	2.3	3.1	3.2	3.3	3.4	6.4	7.1	7.2	7.3	7.4	8.1	8.2

G400 HM DIN 335C 90°

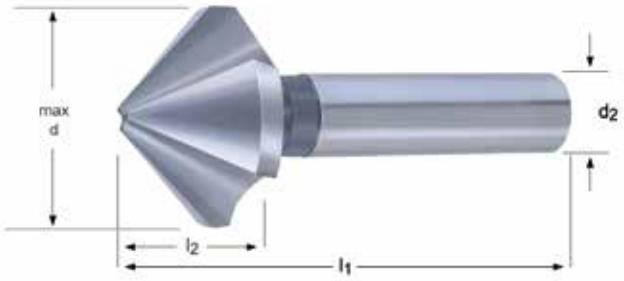

G400

6.30 - 31.00

max d mm	min d mm	l_2 mm	l_1 mm	d_2 Øh_6 mm	z	G400
6.3	1.5	5.0	45	5	3	G4006.3
8.3	2.0	6.0	50	6	3	G4008.3
10.4	2.5	7.1	50	6	3	G40010.4
12.4	2.8	8.0	56	8	3	G40012.4
16.5	3.2	10.0	60	10	3	G40016.5
20.5	3.5	12.5	63	10	3	G40020.5
25.0	3.8	15.0	67	10	3	G40025.0
31.0	4.2	18.0	71	12	3	G40031.0

G135
G335

- 锪钻 - 60°
- Escareador - 60°
- Avellanadores - 60°
- Countersink - 60°

G135	▪	1.1	1.2	1.3	1.4	1.5	4.1	4.2	4.3	5.1	5.2	5.3	6.1	6.2	6.3	
	•	1.6	2.1	2.2	2.3	3.1	3.2	3.3	3.4	6.4	7.1	7.2	7.3	7.4	8.1	8.2
G335	▪	1.1	1.2	1.3	3.1	3.2	3.3	3.4	7.1	7.2	7.3	7.4				
	•	1.4	1.5	1.6	4.1	4.2	4.3	5.1	5.2	5.3	6.1	6.2	6.3	6.4	8.1	8.2

G135 HSS DIN 334C 60°

G335 HSS TiN DIN 334C 60°

G135	G335
	
6.30 - 25.00	6.30 - 25.00

max d mm	min d mm	l_2 mm	l_1 mm	d_2 $Øh_9$ mm	z	G135	G335
6.3	1.6	6.8	45	5	3	G1356.3	G3356.3
8.0	2.0	8.5	50	6	3	G1358.0	G3358.0
10.0	2.5	7.6	50	6	3	G13510.0	G33510.0
12.5	3.2	11.7	56	8	3	G13512.5	G33512.5
16.0	4.0	14.5	63	10	3	G13516.0	G33516.0
20.0	5.0	17.5	67	10	3	G13520.0	G33520.0
25.0	6.3	20.5	71	10	3	G13525.0	G33525.0

G137

- 莫氏锥柄锪钻 - 60°
- Escareador de Haste Cônica - 60°
- Avellanadores de mango cónico - 60°
- Morse Taper Shank Countersink - 60°

G137															
	■	1.1	1.2	1.3	1.4	1.5	4.1	4.2	4.3	5.1	5.2	5.3	6.1	6.2	6.3
	•	1.6	2.1	2.2	2.3	3.1	3.2	3.3	3.4	6.4	7.1	7.2	7.3	7.4	8.1	8.2

G137 HSS DIN 334D 60°

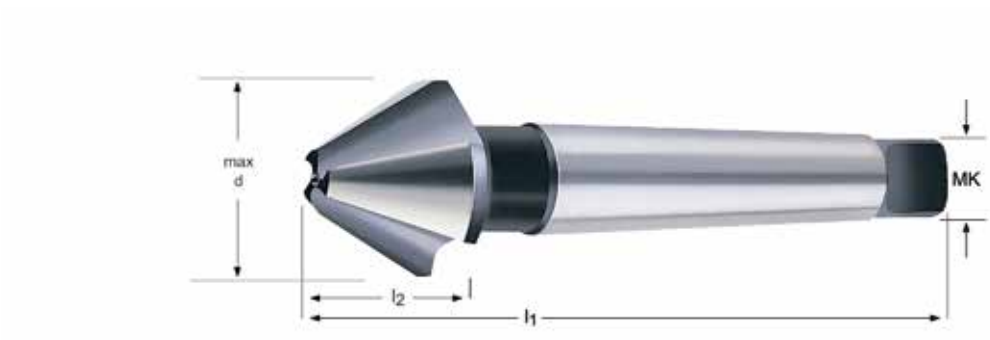

G137

16.00 - 80.00

max d mm	min d mm	l_2 mm	l_1 mm	MK	z	G137
16.0	4.0	14.5	90	1	3	G13716.0
20.0	5.0	17.5	106	2	3	G13720.0
25.0	6.3	20.0	112	2	3	G13725.0
31.5	10.0	23.0	118	2	3	G13731.5
40.0	12.5	28.5	150	3	3	G13740.0
50.0	16.0	36.0	160	3	3	G13750.0
63.0	20.0	43.0	190	4	3	G13763.0
80.0	25.0	54.0	200	4	3	G13780.0

G154

- 锪钻 - 82°
- Escareador - 82°
- Avellanadores - 82°
- Countersink - 82°

G154															
▪	1.1	1.2	1.3	1.4	1.5	4.1	4.2	4.3	5.1	5.2	5.3	6.1	6.2	6.3	
•	1.6	2.1	2.2	2.3	3.1	3.2	3.3	3.4	6.4	7.1	7.2	7.3	7.4	8.1	8.2

G154 HSS DIN 335C 82°

G154

6.30 - 25.00

max d mm	min d mm	l_2 mm	l_1 mm	d_2 Øh_9 mm	z	G154
6.3	1.5	5.5	45	5	3	G1546.3
8.3	2.0	6.5	50	6	3	G1548.3
10.4	2.5	7.6	50	6	3	G15410.4
12.4	2.8	8.5	56	8	3	G15412.4
16.5	3.2	10.5	60	10	3	G15416.5
20.5	3.5	13.0	63	10	3	G15420.5
25.0	3.8	15.5	67	10	3	G15425.0

G129

- 锪钻 - 90°
- Escareador - 90°
- Avellanadores - 90°
- Countersink - 90°

G129															
■	1.1	1.2	1.3	1.4	4.1	4.2	5.1	5.2	6.1	6.2	6.3	7.1	7.2		
•	1.1	1.6	2.1	2.2	3.1	3.2	3.3	3.4	4.3	5.3	6.4	7.3	7.4	8.1	8.2

G129 HSS 90°

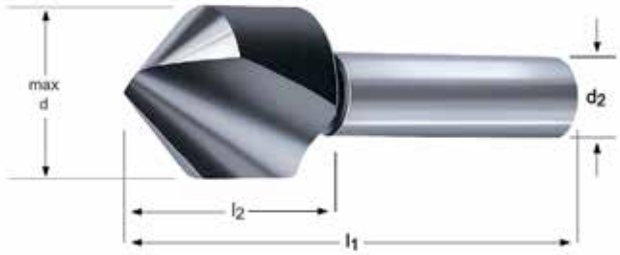

G129

6.00 - 31.50

max d mm	l_2 mm	l_1 mm	d_2 Øh9 mm	z	G129
6.0	0.0	45	6	1	G1296.0
8.0	0.0	50	8	1	G1298.0
10.0	17.0	49	8	1	G12910.0
12.5	17.0	49	8	1	G12912.5
16.0	20.0	56	10	1	G12916.0
20.0	24.0	60	10	1	G12920.0
25.0	25.0	75	12	1	G12925.0
31.5	29.0	80	12	1	G12931.5

G149

- 锪钻 - 90°
- Escareador - 90°
- Avellanadores - 90°
- Countersink - 90°

G149															
▪	1.1	1.2	1.3	1.4	4.1	4.2	5.1	5.2	6.1	6.2	6.3	7.1	7.2		
•	1.5	1.6	2.1	2.2	3.1	3.2	3.3	3.4	4.3	5.3	6.4	7.3	7.4	8.1	8.2

G149 HSS-E

G149

5.00 - 50.00

max d mm	min d mm	l_2 mm	l_1 mm	d_2 Ø mm	d_1 Ø mm	z	G149
5	2	19.0	45	6	10	1	G1495
10	5	23.0	48	8	14	1	G14910
15	10	34.0	65	10	21	1	G14915
20	15	43.0	84	12	28	1	G14920
25	20	48.0	102	15	35	1	G14925
30	25	61.0	115	15	44	1	G14930
35	30	65.0	127	15	48	1	G14935
40	35	66.0	136	15	53	1	G14940
50	40	85.0	166	20	60	1	G14950

G136
G560

- 锪钻 - 90°
- Escareador - 90°
- Avellanadores - 90°
- Countersink - 90°

G106
G506

- 90°锪钻-- 削平柄
- Escareador com haste de três faces planas - 90
- Avellanador 90° con mango con 3 planos
- Countersink with Tri-Flat shank - 90°

G136	■	1.1	1.2	1.3	1.4	4.1	4.2	5.1	5.2	6.1	6.2	6.3	7.1	7.2	8.1	
	•	1.5	1.6	2.1	2.2	2.3	3.1	3.2	3.3	3.4	4.3	5.3	6.4	7.3	7.4	8.2
G560	■	1.1	1.2	1.3	1.4	1.5	2.1	3.1	3.2	3.3	3.4	5.1	5.2	5.3	7.3	7.4
	•	1.6	2.2	2.3	4.1	4.2	4.3	6.1	6.2	6.3	6.4	7.1	7.2	8.1	8.2	
G106	■	1.1	1.2	1.3	1.4	1.5	4.1	4.2	4.3	5.1	5.2	5.3	6.1	6.2	6.3	
	•	1.6	2.1	2.2	2.3	3.1	3.2	3.3	3.4	6.4	7.1	7.2	7.3	7.4	8.1	8.2
G506	■	1.1	1.2	1.3	3.1	3.2	3.3	3.4	7.1	7.2	7.3	7.4				
	•	1.4	1.5	1.6	4.1	4.2	4.3	5.1	5.2	5.3	6.1	6.2	6.3	6.4	8.1	8.2

G136	HSS		DIN 335C				90°	G236 194
G560	HSS	TiAlN	DIN 335C				90°	G236 194
G106	HSS		DIN 335C				90°	G236 194
G506	HSS	TiAlN	DIN 335C				90°	G236 194

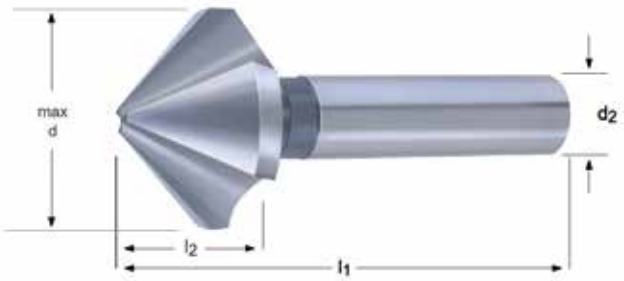

G136	G560	G106	G506
		 NEW	 NEW
4.30 - 31.00	6.30 - 31.00	6.30 - 50.00	6.30 - 50.00

max d mm	min d mm	l_2 mm	l_1 mm	d_2 $Øh_9$ mm	z	G136	G560	G106	G506
4.3	1.3	4.0	40	4	3	G1364.3			
5.0	1.5	4.5	40	4	3	G1365.0			
5.3	1.5	4.5	40	4	3	G1365.3			
5.8	1.5	5.0	45	5	3	G1365.8			
6.0	1.5	5.0	45	5	3	G1366.0			
6.3	1.5	5.5	45	5	3	G1366.3	G5606.3		
6.3	1.5	5.6	45	5	3			G1066.3	G5066.3
7.0	1.8	5.5	50	6	3	G1367.0			
7.3	1.8	6.1	50	6	3	G1367.3			
8.0	2.0	6.1	50	6	3	G1368.0	G5608.0		
8.3	2.0	6.5	50	6	3	G1368.3	G5608.3		

max d mm	min d mm	l_2 mm	l_1 mm	d_2 Øh_9 mm	z	G136	G560	G106	G506
8.3	2.0	6.9	50	6	3			G1068.3	G5068.3
9.4	2.2	7.2	50	6	3	G1369.4			
10.0	2.5	7.6	50	6	3	G13610.0	G56010.0		
10.4	2.5	7.6	50	6	3	G13610.4	G56010.4		
10.4	2.5	7.8	50	6	3			G10610.4	G50610.4
11.5	2.8	8.0	56	8	3	G13611.5			
12.4	2.8	8.5	56	8	3	G13612.4	G56012.4		
12.4	2.8	8.6	56	8	3			G10612.4	G50612.4
13.4	2.9	9.0	56	8	3	G13613.4			
15.0	3.2	9.5	60	10	3	G13615.0			
16.5	3.2	10.5	60	10	3	G13616.5	G56016.5		
16.5	3.2	11.1	60	10	3			G10616.5	G50616.5
19.0	3.5	11.7	63	10	3	G13619.0			
20.5	3.5	13.0	63	10	3	G13620.5	G56020.5		
20.5	3.5	12.9	63	10	3			G10620.5	G50620.5
23.0	3.8	13.7	67	10	3	G13623.0			
25.0	3.8	15.5	67	10	3	G13625.0	G56025.0		
25.0	3.8	15.7	67	10	3			G10625.0	G50625.0
26.0	3.8	15.5	67	10	3	G13626.0			
28.0	4.0	16.5	71	12	3	G13628.0			
30.0	4.2	18.5	71	12	3	G13630.0			
31.0	4.2	18.5	71	12	3	G13631.0	G56031.0	G10631.0	G50631.0
34.0	4.5	19.0	103	16	3			G10634.0	G50634.0
37.0	4.5	21.2	118	16	3			G10637.0	G50637.0
40.0	4.5	20.0	118	16	3			G10640.0	G50640.0
50.0	5.0	23.6	126	16	3			G10650.0	G50650.0

G142

- 锪钻 - 90°
- Escareador com Alívio Radial Extra - 90°
- Avellanadores con alívio radial extra - 90°
- Countersink with extra radial relief - 90°

G570

- 锪钻 - 90°
- Escareador - 90°
- Avellanadores - 90°
- Countersink - 90°

G142	▪	1.1 1.2 2.1 2.2 2.3 4.1 5.1 6.1 6.2 7.1 7.2 8.1 8.2
	•	1.3 1.4 4.2 5.2 6.3 7.3 7.4
G570	▪	1.4 1.5 2.1 2.2 2.3
	•	1.1 1.2 1.3 1.6 2.4 3.1 3.2 3.3 3.4 5.2 5.3 6.1 6.2 6.3 6.4 7.1 7.2 7.3 7.4

G142 HSS DIN 335C 90°

G570 HSS-E AlTiCN DIN 335C 90°

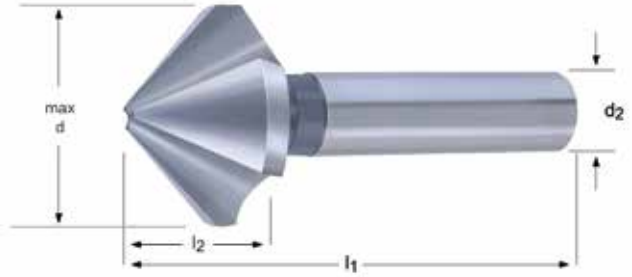

G142

4.80 - 31.00

G570

6.30 - 31.00

max d mm	min d mm	l_2 mm	l_1 mm	d_2 $Øh_9$ mm	z	G142	G570
4.8	1.3	4.5	40	4	3	G1424.8	
5.0	1.5	4.5	40	4	3	G1425.0	
6.0	1.5	5.0	45	5	3	G1426.0	
6.3	1.5	5.5	45	5	3	G1426.3	
6.3	1.5	6.5	45	5	3		G5706.3
7.0	1.8	5.5	50	6	3	G1427.0	
7.3	1.8	6.1	50	6	3	G1427.3	
8.0	2.0	6.1	50	6	3	G1428.0	
8.3	2.0	6.5	50	6	3	G1428.3	
8.3	2.0	8.2	50	6	3		G5708.3
10.0	2.5	7.6	50	6	3	G14210.0	
10.4	2.5	7.6	50	6	3	G14210.4	
10.4	2.5	9.7	50	6	3		G57010.4
11.5	2.8	8.0	56	8	3	G14211.5	
12.4	2.8	8.5	56	8	3	G14212.4	
12.4	2.8	10.6	56	8	3		G57012.4
15.0	3.2	9.5	60	10	3	G14215.0	
16.5	3.2	10.5	60	10	3	G14216.5	
16.5	3.2	13.9	60	10	3		G57016.5
19.0	3.5	11.7	63	10	3	G14219.0	
20.5	3.5	13.0	63	10	3	G14220.5	
20.5	3.5	17.1	63	10	3		G57020.5
23.0	3.8	13.7	67	10	3	G14223.0	
25.0	3.8	15.5	67	10	3	G14225.0	
25.0	3.8	21.4	67	10	3		G57025.0
31.0	4.2	18.5	71	12	3	G14231.0	
31.0	4.2	24.4	71	12	3		G57031.0

G107

- 90°锪钻-- 六角柄
- Escareador com haste sextavada - 90°
- Avellanador 90° con mango hexagonal
- Countersink with hexagonal shank - 90°

G107															
▪	1.1	1.2	1.3	1.4	1.5	4.1	4.2	4.3	5.1	5.2	5.3	6.1	6.2	6.3	
•	1.6	2.1	2.2	2.3	3.1	3.2	3.3	3.4	6.4	7.1	7.2	7.3	7.4	8.1	8.2

G107 HSS-E

G107

6.30 - 20.50

max d mm	min d mm	l_1 mm	d_2 Ø A/F mm	DIN 74	z	G107
6.3	1.5	50	1/4“	M2-M3	3	G1076.3
8.3	2.0	50	1/4“	M4	3	G1078.3
10.4	2.5	50	1/4“	M5	3	G10710.4
12.4	2.8	50	1/4“	M6	3	G10712.4
16.5	3.2	50	1/4“	M8	3	G10716.5
20.5	3.5	50	1/4“	M10	3	G10720.5

G600

- 锪钻，超长 - 90°
- Escareador Extra Longo - 90°
- Avellanadores, extra largos - 90°
- Countersink, Extra Long - 90°

G600																
	■	1.1	1.2	1.3	1.4	1.5										
	•	1.6	2.1	2.2	2.3	3.1	3.2	3.3	6.1	6.2	6.3	6.4	7.1	7.2	7.3	7.4

G600 HSS 90°

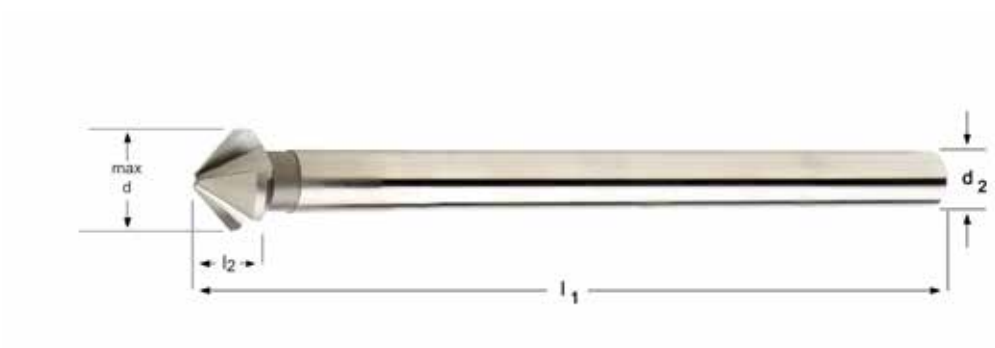

G600

6.30 - 25.00

max d mm	min d mm	l_2 mm	l_1 mm	d_2 Øh_9 mm	z	G600
6.3	1.3	5.6	154	5	3	G6006.3
8.3	1.8	6.9	155	6	3	G6008.3
10.4	2.2	7.8	157	6	3	G60010.4
12.4	2.5	8.6	158	8	3	G60012.4
15.0	2.8	10.3	159	10	3	G60015.0
16.5	2.8	11.1	161	10	3	G60016.5
20.5	3.0	12.9	164	10	3	G60020.5
25.0	3.2	15.7	168	10	3	G60025.0

G132

- 锪钻 - 90°
- Escareador - 90°
- Avellanadores - 90°
- Countersink - 90°

G132								
▪	1.5	1.6	3.4	4.2	4.3	5.2	5.3	6.4
•	1.3	1.4	2.3	8.3				

G132 HSS DIN 335A 90°

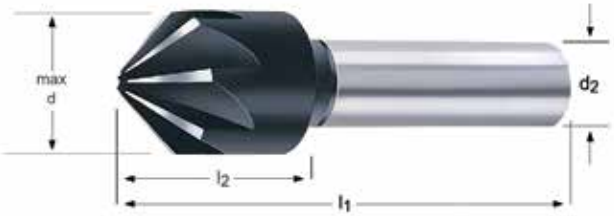

G132

8.00 - 20.00

max d mm	min d mm	l_2 mm	l_1 mm	d_2 Øh_9 mm	z	G132
8.0	-	0.0	48	8	5	G1328.0
12.5	2.0	15.5	48	8	5	G13212.5
16.0	3.2	19.5	56	10	7	G13216.0
20.0	5.0	23.0	60	10	7	G13220.0

G138
G338

- 莫氏锥柄锪钻 - 90°
- Escareador de Haste Cônica - 90°
- Avellanadores de mango cónico - 90°
- Morse Taper Shank Countersink - 90°

G138	▪	1.1	1.2	1.3	1.4	1.5	4.1	4.2	4.3	5.1	5.2	5.3	6.1	6.2	6.3	
	•	1.6	2.1	2.2	2.3	3.1	3.2	3.3	3.4	6.4	7.1	7.2	7.3	7.4	8.1	8.2
G338	▪	1.1	1.2	1.3	1.4	1.5	3.1	3.2	3.3	3.4	7.1	7.2	7.3	7.4		
	•	1.6	4.1	4.2	4.3	5.1	5.2	5.3	6.1	6.2	6.3	6.4	8.1	8.2		

G138 HSS DIN 335D 90°

G338 HSS TiN DIN 335D 90°

max d mm	min d mm	l_2 mm	l_1 mm	MK	z	G138	G338
25.0	3.8	15.5	106	2	3	G13825.0	G33825.0
30.0	4.2	18.5	112	2	3	G13830.0	
31.0	4.2	20.0	112	2	3	G13831.0	G33831.0
34.0	4.5	19.5	118	2	3	G13834.0	
37.0	4.8	21.7	118	2	3	G13837.0	G33837.0
40.0	10.0	20.5	140	3	3	G13840.0	G33840.0
50.0	14.0	24.1	150	3	3	G13850.0	G33850.0
63.0	16.0	28.5	180	4	3	G13863.0	G33863.0
80.0	22.0	36.0	190	4	3	G13880.0	

G171

- 锪钻 - 100°
- Escareador - 100°
- Avellanadores - 100°
- Countersink - 100°

G171																
▪	1.1	1.2	1.3	3.1	3.2	3.3	3.4	7.1	7.2	7.3	7.4					
•	1.4	1.5	1.6	4.1	4.2	4.3	5.1	5.2	5.3	6.1	6.2	6.3	6.4	8.1	8.2	

G171 HSS TiAlN DIN 335C 100°

G171

6.30 - 25.00

max d mm	min d mm	l_2 mm	l_1 mm	d_2 Øh_9 mm	z	G171
6.3	1.5	4.5	44	5	3	G1716.3
8.3	2.0	5.5	49	6	3	G1718.3
10.4	2.5	6.6	49	6	3	G17110.4
12.4	2.8	7.0	53	8	3	G17112.4
16.5	3.2	9.0	56	10	3	G17116.5
20.5	3.5	11.0	61	10	3	G17120.5
25.0	3.8	13.5	65	10	3	G17125.0

M138

- 圆锥钻
- Broca Cônica
- Broca Multi-diámetro
- Conical Drill

M138																		
■	1.1	1.2	1.3	1.4	4.1	4.2	4.3	5.1	5.2	5.3	6.1	6.2	6.3	7.1	7.2	8.1	8.2	
•	1.5	1.6	2.1	2.2	2.3	3.1	3.2	3.3	3.4	6.4	7.3	7.4						

M138 HSS ST DORMER 20°

M138

No.1 - No.6

Nr.	max d mm	min d mm	l_2 mm	l_1 mm	d_2 h11 mm	M138
1	14	3	36	58	6	M1381
2	20	8	40	62	8	M1382
3	30	16	48	70	10	M1383
4	40	26	51	76	10	M1384
5	50	36	54	79	10	M1385
6	60	46	57	82	13	M1386

G314

- 圆锥钻
- Broca Cônica
- Broca Multi-diámetro
- Conical Drill

G314																		
▪	1.1	1.2	1.3	1.4	4.1	4.2	4.3	5.1	5.2	5.3	6.1	6.2	6.3	7.1	7.2	8.1	8.2	
•	1.5	1.6	2.1	2.2	2.3	3.1	3.2	3.3	3.4	6.4	7.3	7.4						

G314 HSS 20°

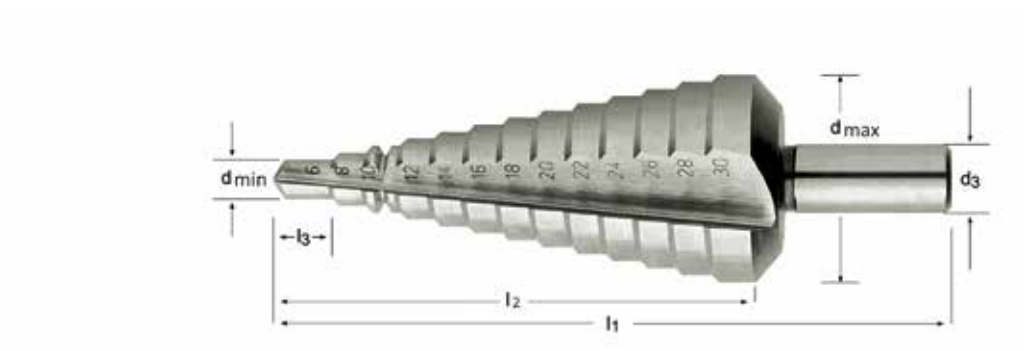

G314

4.00 - 9.00

Nr.	d min-max mm	l_3 mm	l_2 mm	l_1 mm	d_3 Ø mm	G314
412	4.0 mm ÷ 12.0 mm x 1.0 mm	5.0	61	80	6.0	G314412
1220	12.0 mm ÷ 20.0 mm x 1.0 mm	4.0	55	76	9.0	G3141220
2030	20.0 mm ÷ 30.0 mm x 1.0 mm	4.0	67	88	12.0	G3142030
3040	30.0 mm ÷ 40.0 mm x 1.0 mm	4.0	74	98	13.0	G3143040
420	4.0 mm ÷ 20.0 mm x 2.0 mm	4.0	48	76	8.0	G314420
630	6.0 mm ÷ 30.0 mm x 2.0 mm	4.0	73	98	10.0	G314630
M	9.0 mm ÷ 36.0 mm x 3.0 mm	3.0	57	86	12.0	G314M

G125

- 锪孔 - 180°
- Escareador - 180°
- Refrentadores - 180°
- Counterbore - 180°

G125																			
■	1.1	1.2	1.3	2.1	3.1	3.2	7.1	7.2	8.1										
•	1.4	1.5	1.6	2.2	3.3	3.4	4.1	4.2	4.3	5.1	5.2	5.3	6.1	6.2	6.3	7.3	7.4	8.2	

G125 HSS DIN 373 180°

G125

6.50 - 20.00

d_1 $Øz_9$ mm	d_3 $Øe_8$ mm	M	l_1 mm	l_2 mm	d_2 $Øh_9$ mm	z	G125
6.5	2.5	M 3 t	71	14	5.0	3	G1256.5X2.5 [1]
6.5	3.2	M 3 f	71	14	5.0	3	G1256.5X3.2 [2]
6.5	3.4	M 3 m	71	14	5.0	3	G1256.5X3.4 [3]
8.0	3.3	M 4 t	71	14	5.0	3	G1258.0X3.3 [1]
8.0	4.3	M 4 f	71	14	5.0	3	G1258.0X4.3 [2]
8.0	4.5	M 4 m	71	14	5.0	3	G1258.0X4.5 [3]
10.0	4.2	M 5 t	80	18	8.0	3	G12510.0X4.2 [1]
10.0	5.3	M 5 f	80	18	8.0	3	G12510.0X5.3 [2]
10.0	5.5	M 5 m	80	18	8.0	3	G12510.0X5.5 [3]
11.0	5.0	M 6 t	80	18	8.0	3	G12511.0X5.0 [1]
11.0	6.4	M 6 f	80	18	8.0	3	G12511.0X6.4 [2]
11.0	6.6	M 6 m	80	18	8.0	3	G12511.0X6.6 [3]
15.0	6.8	M 8 t	100	22	12.5	3	G12515.0X6.8 [1]
15.0	8.4	M 8 f	100	22	12.5	3	G12515.0X8.4 [2]
15.0	9.0	M 8 m	100	22	12.5	3	G12515.0X9.0 [3]
18.0	8.5	M 10 t	100	22	12.5	3	G12518.0X8.5 [1]
18.0	10.5	M 10 f	100	22	12.5	3	G12518.0X10.5 [2]
18.0	11.0	M 10 m	100	22	12.5	3	G12518.0X11.0 [3]
20.0	10.2	M 12 t	100	22	12.5	3	G12520.0X10.2 [1]
20.0	13.0	M 12 f	100	22	12.5	3	G12520.0X13.0 [2]
20.0	13.5	M 12 m	100	22	12.5	3	G12520.0X13.5 [3]

[1] t = 用于攻丝底孔 / t= para furo do macho / t = Para agujero roscado / t= for tap hole
[2] f = 用于通孔的精加工 / f = furo passante fino / f= para agujero pasante fino / f= for through hole fine
[3] m = 用于通孔的半精加工 / m = para furo passante médio / m= Para agujero pasante medio / m= for through hole medium

G236

- 锪钻套装
- Jogo de escareadores
- Juego de Avellanadores
- Countersink set

A=套件中的型号, B=套件中的数量, C=套件中的直径
A=Tipos no jogo, B=No. no jogo, C=Diâmetros no jogo
A=Tipos en el juego, B=No. en el Juego, C=Diámetros en el Juego
A=Styles in Set, B=No. in Set, C=Diameters in Set

G236

Set

Nr.	A	B	C	G236
1	G136	6	6.30 mm, 8.30 mm, 10.40 mm, 12.40 mm, 16.50 mm, 20.50 mm	G2361
2	G136	4	6.30 mm, 10.40 mm, 16.50 mm, 20.50 mm	G2362
3	G560	6	6.30 mm, 8.30 mm, 10.40 mm, 12.40 mm, 16.50 mm, 20.50 mm	G2363
4	G106	6	6.30 mm, 8.30 mm, 10.40 mm, 12.40 mm, 16.50 mm, 20.50 mm	G2364
5	G506	6	6.30 mm, 8.30 mm, 10.40 mm, 12.40 mm, 16.50 mm, 20.50 mm	G2365

195 - 206

DORMER

螺纹形式	Tipo de Rosca	Forma de Rosca	Thread form
标准	Norma	Estándar	Standard
深度	Profundidade	Profundidad	Depth
材料	Material	Material	Material
螺旋角	Ângulo de hélice	Ángulo de hélice	Helix angle
加工方向	Direção	Dirección	Direction
涂层	Tratamento	Tratamiento superficial	Coating
柄部	Haste	Mango	Shank
冷却	Refrigeração	Refrigeración	Coolant

■ 性能卓越	Excelente para a Aplicação	Excelente para Aplicación	Excellent for Application
■ 性能良好	Bom para a Aplicação	Bueno para Aplicación	Good for Application
实例 10 = 外缘处的切削速度，米/分，+/- 10%	Exemplo 10 = Velocidade periférica em metros/minuto +/- 10%	Ejemplo 10 = Velocidad Periférica en metros/minuto +/- 10%	Example 10 = Peripheral speed in metres/minute +/- 10%

产品型号	Código	Código de producto	Product Codes
尺寸范围	Gama de medidas	Rango de Diámetros	Size Range

AMG	中文	Português	Español	English
1.1	铁磁性低碳钢	Aço macio magnético	Acero blando	Magnetic soft steel
1.2	结构钢, 表面渗碳钢	Aço estrutural, Aço cementado	Acero de construcción/cementación	Structural steel, case carburizing steel
1.3	普通碳钢	Aço-carbono	Acero al carbono	Plain Carbon steel
1.4	合金钢	Aço de liga	Acero aleado	Alloy steel
1.5	合金钢, 淬火回火钢	Aço de liga, Aço temperado	Acero aleado/temple y revenido	Alloy steel, Hardened and tempered steel
1.6	合金钢, 淬火回火钢	Aço de liga, Aço temperado	Acero aleado/temple y revenido	Alloy steel, Hardened and tempered steel
1.7	热处理合金钢	Aço de liga temperado	Acero aleado cementado	Alloy steel, Heat treated
1.8	淬火合金钢, 耐磨钢	Aço de liga temperado	Acero aleado cementado	Alloy steel, Hardened & Wear resistant steel
2.1	易切削不锈钢	Aço inoxidável de maquinagem fácil	Acero inoxidable fácil mecanizado	Free machining, Stainless Steel
2.2	奥氏体不锈钢	Austenítico	Austenítico	Austenitic
2.3	铁素体 + 奥氏体, 马氏体不锈钢	Ferrítico + Austenítico + Martensítico	Ferritico, Ferr. + Aust., Marten	Ferritic + Austenitic, Ferritic, Martensitic
2.4	沉淀硬化不锈钢	Aço inoxidável de fácil usinagem	Acero Inoxidable Templado	Precipitation Hardened
3.1	灰铸铁	Grafite laminar	Con grafito laminar	Lamellar graphite
3.2	灰铸铁	Grafite laminar	Con grafito laminar	Lamellar graphite
3.3	球墨铸铁, 可锻铸铁	Grafite nodular/ Ferro fundido maleável	Con graf. laminar, fundic. maleable	Nodular graphite, Malleable Cast Iron
3.4	球墨铸铁, 可锻铸铁	Grafite nodular/ Ferro fundido maleável	Con graf. laminar, fundic. maleable	Nodular graphite, Malleable Cast Iron
4.1	纯钛	Titânio, sem liga	Titanio no aleado	Titanium, unalloyed
4.2	钛合金	Titânio, com liga	Titanio aleado	Titanium, alloyed
4.3	钛合金	Titânio, com liga	Titanio aleado	Titanium, alloyed
5.1	纯镍	Níquel, sem liga	Níquel no aleado	Nickel, unalloyed
5.2	镍合金	Níquel, com liga	Níquel aleado	Nickel, alloyed
5.3	镍合金	Níquel, com liga	Níquel aleado	Nickel, alloyed
6.1	紫铜	Cobre	Cobre	Copper
6.2	β黄铜, 青铜	Latão beta, bronze	β-Latón, bronce	β-Brass, Bronze
6.3	α黄铜	Latão alfa	α-Latón	α-Brass
6.4	高强度青铜	Bronze de alta resistência	Metal AMPCO	High Strength Bronze
7.1	纯铝, 纯镁	Al, Mg, sem liga	Al, Mg, no aleado	Al, Mg, unalloyed
7.2	铝合金, 硅含量 < 0.5%	Al com liga, Si<0.5%	Al aleado con Si < 0.5%	Al alloyed, Si < 0.5%
7.3	铝合金, 硅含量 > 0.5% < 10%	Al com liga, Si>0.5%<10%	Al aleado con Si > 0.5% < 10%	Al alloyed, Si > 0.5% < 10%
7.4	铝合金, 硅含量 > 10% 晶须增强铝合金, 镁合金	Al com liga, Si>10% reforçadas com monocristais filiformes, ligas de Al/Mg	Al aleado, Si>10% Reforzado por filamentos, Al-aleados, Mg-aleados	Al alloyed, Si > 10% Whisker reinforced Al-alloys Mg-alloys
8.1	调整字体大小, 适应排版需要	Termoplásticos	Termoplásticos	Thermoplastics
8.2	热固性塑料	Plásticos termoduros	Plásticos endurecidos por calor	Thermosetting plastics
8.3	增强塑料	Materiais plásticos reforçados	Materiales plásticos reforzados	Reinforced plastic materials
9.1	金属陶瓷	Cerametal (metalocerâmica)	Cerametales (metales-cerámicas)	Cermets (metals-ceramics)
10.1	标准石墨	Grafite standard	Grafito standard	Graphite

	M	M	M	M	MF	MF	UNC	UNF	G	NPT
	DORMER	DORMER	DORMER	DORMER	DORMER	DORMER	DORMER	DORMER	DORMER	DORMER
	2XD	2XD	2XD	2XD	1.5XD	1.5XD	2XD	2XD	1.5XD	
	HM	HM	HM	HM	HM	HM	HM	HM	HM	HM
	λ10°	λ10°	λ27°	λ27°	λ10°	λ10°	λ10°	λ10°	λ10°	λ10°
	Alcrona Pro	Alcrona Pro	Alcrona Pro	Alcrona Pro	Alcrona Pro	Alcrona Pro	Alcrona Pro	Alcrona Pro	Alcrona Pro	Alcrona Pro
	DIN 6535HA	DIN 6535HB	DIN 6535HA	DIN 6535HA	DIN 6535HA	DIN 6535HB	DIN 6535HB	DIN 6535HB	DIN 6535HA	DIN 6535HB
	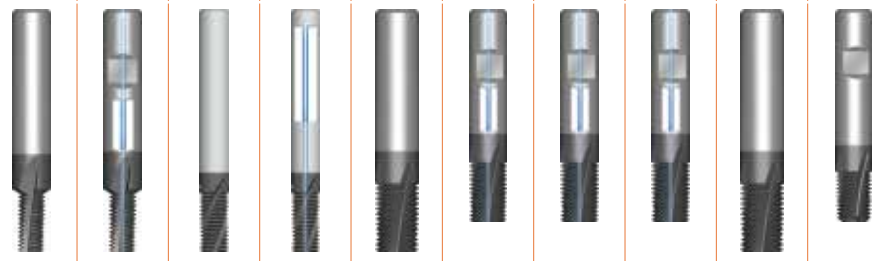									
	J200	J205	J210	J215	J220	J225	J235	J245	J280	J260
	M4 - M16	M8 - M16	M6 - M16	M6 - M16	M6 - M24	M10 - M18	1/4 - 3/4	1/4 - 3/4	1/8 - 3"	1/8 - 2"
	NEW	NEW	NEW	NEW	NEW	NEW	NEW	NEW	NEW	NEW
AMG	**199**	**199**	**200**	**200**	**201**	**201**	**202**	**203**	**204**	**205**	**ISO**
1.1	■170B	■170B	■175B	■175B	■170B	■170B	■170B	■170B	■170B	■170B	P 1
1.2	■170B	■170B	■175B	■175B	■170B	■170B	■170B	■170B	■170B	■170B	P 1
1.3	■140B	■140B	■145B	■145B	■140B	■140B	■140B	■140B	■140B	■140B	P 2
1.4	■130B	■130B	■135B	■135B	■130B	■130B	■130B	■130B	■130B	■130B	P 3
1.5	■100B	■100B	■105B	■105B	■100B	■100B	■100B	■100B	■100B	■100B	P 4
1.6	■80B	■80B	■85B	■85B	■80B	■80B	■80B	■80B	■80B	■80B	H 1
1.7	●50A	●50A	●50A	●50A	●50A	●50A	●50A	●50A	●50A	●50A	H 3
1.8	●30A	●30A	●30A	●30A	●30A	●30A	●30A	●30A	●30A	●30A	H 4
2.1	●50A	■50A	●50A	●50A	●50A	■50A	■50A	■50A	●50A	●50A	M 1
2.2	●40A	■40A	●40A	●40A	●40A	■40A	■40A	■40A	●40A	●40A	M 3
2.3	●30A	■30A	●30A	●30A	●30A	■30A	■30A	■30A	●30A	●30A	M 2
2.4	●25A	■25A	●25A	●25A	●25A	■25A	■25A	■25A	●25A	●25A	S 2
3.1	■150B	■150B	■155B	■155B	■150B	■150B	■150B	■150B	■150B	■150B	K 1
3.2	■130B	■130B	■135B	■135B	■130B	■130B	■130B	■130B	■130B	■130B	K 2
3.3	■150B	■150B	■155B	■155B	■150B	■150B	■150B	■150B	■150B	■150B	K 3
3.4	■120B	■120B	■125B	■125B	■120B	■120B	■120B	■120B	■120B	■120B	K 4
4.1	■170B	■170B	■175B	■175B	■170B	■170B	■170B	■170B	■170B	■170B	S 1
4.2	■80B	■80B	■80B	■80B	■80B	■80B	■80B	■80B	■80B	■80B	S 2
4.3	■50B	■50B	■50B	■50B	■50B	■50B	■50B	■50B	■50B	■50B	S 3
5.1	●250B	■250B	●250B	●255B	●250B	■250B	■250B	■250B	●250B	●250B	S 1
5.2	●40A	■40A	●40A	●40A	●40A	■40A	■40A	■40A	●40A	●40A	S 2
5.3	●25A	●25A	●25A	●25A	●25A	■25A	●25A	●25A	●25A	●25A	S 3
6.1	■400B	■400B	■405B	■405B	■400B	■400B	■400B	■400B	■400B	■400B	N 3
6.2	■400B	■400B	■405B	■405B	■400B	■400B	■400B	■400B	■400B	■400B	N 4
6.3	■400B	■400B	■405B	■405B	■400B	■400B	■400B	■400B	■400B	■400B	N 3
6.4	■60A	■60A	■60A	■60A	■60A	■60A	■60A	■60A	■60A	■60A	N 4
7.1	■800C	■800C	■805C	■805C	■800C	■800C	■800C	■800C	■800C	■800C	N 1
7.2	■800C	■800C	■805C	■805C	■800C	■800C	■800C	■800C	■800C	■800C	N 1
7.3	■700C	■700C	■705C	■705C	■700C	■700C	■700C	■700C	■700C	■700C	N 1
7.4	■340B	■340B	■345B	■345B	■340B	■340B	■340B	■340B	■340B	■340B	N 2
8.1	■340C	■340C	■345C	■345C	■340C	■340C	■340C	■340C	■340C	■340C	O
8.2	■210C	■210C	■215C	■215C	■210C	■210C	■210C	■210C	■210C	■210C	O
8.3	■180C	■180C	■185C	■185C	■180C	■180C	■180C	■180C	■180C	■180C	O
9.1											H
10.1	●200C	●200C	●210C	●205C	●200C	●200C	●200C	●200C	●200C	●200C	O

DORMER

M

	A		B		C	
Ø	ap= 1 x d_1	ap= 2 x d_1	ap= 1 x d_1	ap= 2 x d_1	ap= 1 x d_1	ap= 2 x d_1
3,2	0,010	0,005	0,011	0,006	0,017	0,012
4,1	0,009	0.007	0,012	0,008	0,014	0,011
4,8	0,012	0,009	0,015	0,010	0,017	0,014
6,5	0,017	0,014	0,027	0,017	0,030	0,025
8,2	0,021	0,018	0,034	0,029	0,040	0,033
9,9	0,024	0,020	0,039	0,024	0,048	0,032
11,6	0,031	0,025	0,050	0,031	0,059	0,035
13,6	0,039	0,032	0,062	0,051	0,071	0,048
16	0.061	0,033	0,064	0,036	0,066	0,033
19	0,085	0,044	0,089	0,048	0,095	0,044

MF

		A		B		C	
d_1	P	ap= 3/4 x d_1	ap= 1,5 x d_1	ap= 3/4 x d_1	ap= 1,5 x d_1	ap= 3/4 x d_1	ap= 1,5 x d_1
4,8	0,5	0,017	0,014	0,022	0,018	0,025	0,021
6	0,75	0,023	0,018	0,033	0,027	0,037	0,030
6	1	0,020	0,016	0,029	0,023	0,032	0,026
8	1	0,025	0,020	0,041	0,033	0,045	0,037
10	1	0,034	0,028	0,055	0,045	0,069	0,056
10	1,5	0,028	0,023	0,045	0,037	0,056	0,046
12	1	0,048	0,039	0,077	0,065	0,077	0,075
12	1,5	0,040	0,032	0,065	0,053	0.076	0.062
14	1	0,060	0,049	0,084	0,079	0,084	0,084
14	1,5	0,049	0,040	0,079	0,064	0,084	0,074
16	2	0,050	0,041	0,082	0,066	0,089	0,077
20	2	0,067	0,055	0,100	0,093	0,100	0,100

UNC

		A		B		C	
d_1	P	ap= 1 x d_1	ap= 2 x d_1	ap= 1 x d_1	ap= 2 x d_1	ap= 1 x d_1	ap= 2 x d_1
4,8	20	0.003	0,003	0,012	0,006	0,029	0,014
5,5	18	0,004	0,003	0,017	0,009	0,041	0,023
7,5	16	0,008	0,005	0,029	0,016	0,056	0,043
8	14	0,008	0,006	0,031	0,018	0,060	0,049
10	13	0,009	0,007	0,040	0,032	0,071	0,071
10	12	0,008	0,006	0,038	0,029	0,071	0,069
12	11	0,009	0,007	0,036	0,026	0,077	0,077
14	10	0,010	0,008	0,060	0,043	0,084	0,084

UNF

	A		B		C	
d_1	ap= 1 x d_1	ap= 2 x d_1	ap= 1 x d_1	ap= 2 x d_1	ap= 1 x d_1	ap= 2 x d_1
4,8	0.004	0,003	0,016	0,008	0,034	0,021
6	0,006	0,004	0,028	0,016	0,055	0,045
8	0,013	0,007	0,037	0,025	0,063	0,058
10	0,022	0,011	0,046	0,038	0,071	0,071
14	0,036	0,018	0,075	0,061	0,084	0,084

G

	A		B		C	
d_1	ap= 1 x d_1	ap= 2 x d_1	ap= 1 x d_1	ap= 2 x d_1	ap= 1 x d_1	ap= 2 x d_1
3,2	0,010	0,005	0,011	0,006	0,017	0,012
4,1	0,009	0.007	0,012	0,008	0,014	0,011
4,8	0,012	0,009	0,015	0,010	0,017	0,014
6,5	0,017	0,014	0,027	0,017	0,030	0,025
16	0.061	0,033	0,064	0,036	0,066	0,033
19	0,085	0,044	0,089	0,048	0,095	0,044

NPT

d_1	Ap=	A	B	C
7,9	Standard	0,026	0,044	0,069
9.9	Standard	0,029	0,046	0,070
15,9	Standard	0,053	0,087	0,089
19,9	Standard	0,064	0,1	0,1

ap =

d_1 =

J200

- M标准螺纹铣刀,螺旋角度10°
- Fresa Interpoladora de Rosca Métrica com Canal Helicoidal 10°
- Fresa de roscar M con ángulo de hélice de 10°
- M Thread Mill Spiral Flute 10°

内螺纹
Rosca Interna
Rosca interior
Internal Thread

J205

- M标准螺纹铣刀,螺旋角度10°,带内冷
- Fresa Interpoladora de Rosca Métrica com Canal Helicoidal 10° e refrigeração interna
- Fresa de roscar M con ángulo de hélice de 10° - refrigeración interna
- M Thread Mill Spiral Flute 10° Oil Feed

内螺纹
Rosca Interna
Rosca interior
Internal Thread

J200	▪	1.1 1.2 1.3 1.4 1.5 1.6 3.1 3.2 3.3 3.4 4.1 4.2 4.3 6.1 6.2 6.3 6.4 7.1 7.2 7.3 7.4 8.1 8.2 8.3
	•	1.7 1.8 2.1 2.2 2.3 2.4 5.1 5.2 5.3 10.1
J205	▪	1.1 1.2 1.3 1.4 1.5 1.6 2.1 2.2 2.3 2.4 3.1 3.2 3.3 3.4 4.1 4.2 4.3 5.1 5.2 6.1 6.2 6.3 6.4 7.1 7.2 7.3 7.4 8.1 8.2 8.3
	•	1.7 1.8 5.3 10.1

J200 M | DORMER | 2XD | HM | λ10° | Alcrona Pro | DIN 6535HA

J205 M | DORMER | 2XD | HM | λ10° | Alcrona Pro | DIN 6535HB

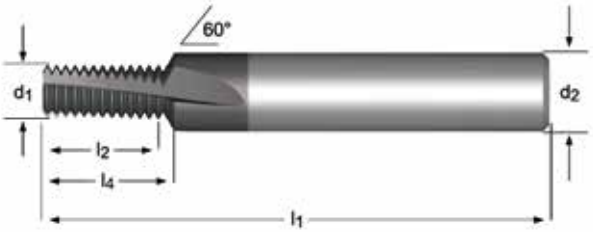

M4 - M16 | M8 - M16

≥	P mm	d_1 Ø mm	l_2 mm	l_1 mm	d_2 Ø mm	z	l_4 mm	J200	J205
M4	0.70	3.20	8.4	57	6	3	9.5	J2003.2X.7	
M5	0.80	4.10	11.2	57	6	3	12.1	J2004.1X.8	
M6	1.00	4.80	13.0	63	8	3	14.4	J2004.8X1.0	
M8	1.25	6.50	17.5	72	10	3	19.1	J2006.5X1.25	J2056.5X1.25
M10	1.50	8.20	21.0	83	12	3	22.8	J2008.2X1.5	J2058.2X1.50
M12	1.75	9.90	26.25	83	14	4	28.2	J2009.9X1.75	J2059.9X1.75
M14	2.00	11.60	30.0	92	16	4	32.2	J20011.6X2.0	J20511.6X2.0
M16	2.00	13.60	34.0	92	18	4	36.2	J20013.6X2.0	J20513.6X2.0

DORMER

J210

- M标准螺纹铣刀,螺旋角度27°
- Fresa Interpoladora de Rosca Métrica com Canal Helicoidal 27°
- Fresa de roscar M con ángulo de hélice de 27°
- M Thread Mill Spiral Flute 27°

内螺纹
Rosca Interna
Rosca interior
Internal Thread

J215

- M标准螺纹铣刀,螺旋角度27°,带内冷
- Fresa Interpoladora de Rosca Métrica com Canal Helicoidal 27° e refrigeração interna
- Fresa de roscar M con ángulo de hélice de 27° - refrigeración interna
- M Thread Mill Spiral Flute 27° Oil Feed

内螺纹
Rosca Interna
Rosca interior
Internal Thread

J210; J215																		
■	1.1	1.2	1.3	1.4	1.5	1.6	3.1	3.2	3.3	3.4	4.1	4.2	4.3	6.1	6.2	6.3	6.4	7.1
	7.2	7.3	7.4	8.1	8.2	8.3												
•	1.7	1.8	2.1	2.2	2.3	2.4	5.1	5.2	5.3	10.1								

J210	M	DORMER	2XD	HM	λ27°		Alcrona Pro	DIN 6535HA	
J215	M	DORMER	2XD	HM	λ27°		Alcrona Pro	DIN 6535HA	

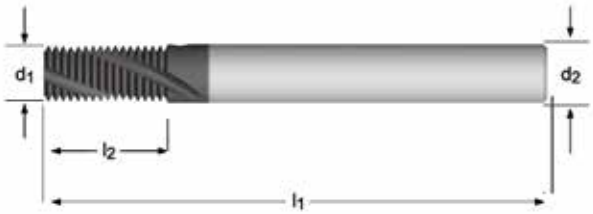

J210 — M6 - M16

J215 — M6 - M16

≥	P mm	d_1 Ø mm	l_2 mm	l_1 mm	d_2 Ø mm	z	J210	J215
M6	1.00	4.50	13.0	57	6	3	J2104.5X1.0	J2154.5X1.0
M8	1.25	6.00	17.5	65	6	3	J2106.0X1.25	J2156.0X1.25
M10	1.50	7.50	21.0	72	8	3	J2107.5X1.5	J2157.5X1.5
M12	1.75	9.50	26.25	80	10	3	J2109.5X1.75	J2159.5X1.75
M14	2.00	10.00	30.0	83	10	4	J21010.0X2.0	J21510.0X2.0
M16	2.00	12.00	34.0	92	12	4	J21012.0X2.0	J21512.0X2.0

DORMER

J220

- MF标准螺纹铣刀,螺旋角度10°
- Fresa Interpoladora de Rosca MF com Canal Helicoidal 10°
- Fresa de roscar MF con ángulo de hélice de 10°
- MF Thread Mill Spiral Flute 10°

内螺纹
Rosca Interna
Rosca interior
Internal Thread

J225

- MF标准螺纹铣刀,螺旋角度10°
- Fresa Interpoladora de Rosca MF com Canal Helicoidal 10° e refrigeração interna
- Fresa de roscar MF con ángulo de hélice de 10° - refrigeración interna
- MF Thread Mill Spiral Flute 10° Oil Feed

内螺纹
Rosca Interna
Rosca interior
Internal Thread

J220	▪	1.1 1.2 1.3 1.4 1.5 1.6 3.1 3.2 3.3 3.4 4.1 4.2 4.3 6.1 6.2 6.3 6.4 7.1 7.2 7.3 7.4 8.1 8.2 8.3
	•	1.7 1.8 2.1 2.2 2.3 2.4 5.1 5.2 5.3 10.1
J225	▪	1.1 1.2 1.3 1.4 1.5 1.6 2.1 2.2 2.3 2.4 3.1 3.2 3.3 3.4 4.1 4.2 4.3 5.1 5.2 5.3 6.1 6.2 6.3 6.4 7.1 7.2 7.3 7.4 8.1 8.2 8.3
	•	1.7 1.8 10.1

J220	MF	DORMER	1.5XD	HM	λ10°		Alcrona Pro	DIN 6535HA	
J225	MF	DORMER	1.5XD	HM	λ10°		Alcrona Pro	DIN 6535HB	

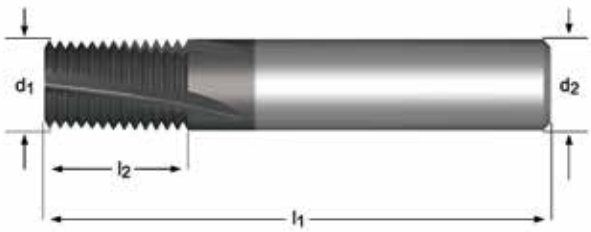

M6 - M24 | M10 - M18

≥	P mm	d_1 Ø mm	l_2 mm	l_1 mm	d_2 Ø mm	z	J220	J225
M6	0.50	4.80	10.0	57	6	3	J2204.8X.5	
M8	0.75	6.00	12.0	57	6	3	J2206.0X.75	
M8	1.00	6.00	12.0	57	6	3	J2206.0X1.0	
M10	1.00	8.00	16.0	63	8	4	J2208.0X1.0	J2258.0X1.0
M12	1.00	10.00	20.0	72	10	4	J22010.0X1.0	J22510.0X1.0
M12	1.50	10.00	20.0	72	10	4	J22010.0X1.5	J22510.0X1.5
M14	1.00	12.00	22.0	83	12	4	J22012.0X1.0	J22512.0X1.0
M14	1.50	12.00	22.0	83	12	4	J22012.0X1.5	J22512.0X1.5
M16	1.00	14.00	26.0	83	14	5	J22014.0X1.0	J22514.0X1.0
M16	1.50	14.00	26.0	83	14	5	J22014.0X1.5	J22514.0X1.5
M18	1.50	16.00	30.0	92	16	5		J22516.0X1.5
M20	2.00	16.00	30.0	92	16	5	J22016.0X2.0	
M20	2.50	16.00	42.5	105	16	5	J22016.0X2.5	
M24	2.00	20.00	35.0	104	20	5	J22020.0X2.0	
M24	3.00	19.00	50.0	125	20	5	J22019.0X3.0	

J235

- UNC标准螺纹铣刀,螺旋角度10°,带内冷
- Fresa Interpoladora de Rosca UNC com Canal Helicoidal 10° e refrigeração interna
- Fresa de roscar UNC con ángulo de hélice de 10° - refrigeración interna
- UNC Thread Mill Spiral Flute 10° Oil Feed

内螺纹
Rosca Interna
Rosca interior
Internal Thread

J235																					
▪	1.1	1.2	1.3	1.4	1.5	1.6	2.1	2.2	2.3	2.4	3.1	3.2	3.3	3.4	4.1	4.2	4.3	5.1	5.2	6.1
	6.2	6.3	6.4	7.1	7.2	7.3	7.4	8.1	8.2	8.3										
•	1.7	1.8	5.3	10.1																

J235 UNC | DORMER | 2XD | HM | λ10° | Alcrona Pro | DIN 6535HB

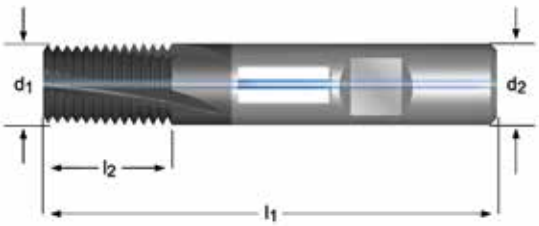

J235

NEW

1/4 - 3/4

≥	TPI	d_1 Ø mm	l_2 mm	l_1 mm	d_2 Ø mm	z	J235
1/4	20	4.80	14.0	57	6	3	J2354.8-20
5/16	18	5.50	14.0	57	6	3	J2355.5-18
3/8	16	7.50	19.0	63	8	4	J2357.5-16
7/16	14	8.00	19.0	63	8	4	J2358.0-14
1/2	13	10.00	22.0	72	10	4	J23510.0-13
9/16	12	10.00	22.0	72	10	4	J23510.0-12
5/8	11	12.00	26.0	83	12	4	J23512.0-11
3/4	10	14.00	32.0	83	14	5	J23514.0-10

J245

- UNF标准螺纹铣刀,螺旋角度10°,带内冷
- Fresa Interpoladora de Rosca UNF com Canal Helicoidal 10° e refrigeração interna
- Fresa de roscar UNF con ángulo de hélice de 10° - refrigeración interna
- UNF Thread Mill Spiral Flute 10° Oil Feed

内螺纹
Rosca Interna
Rosca interior
Internal Thread

J245																					
▪	1.1	1.2	1.3	1.4	1.5	1.6	2.1	2.2	2.3	2.4	3.1	3.2	3.3	3.4	4.1	4.2	4.3	5.1	5.2	6.1	
	6.2	6.3	6.4	7.1	7.2	7.3	7.4	8.1	8.2	8.3											
•	1.7	1.8	5.3	10.1																	

J245 UNF | DORMER | 2XD | HM | λ10° | Alcrona Pro | DIN 6535HB

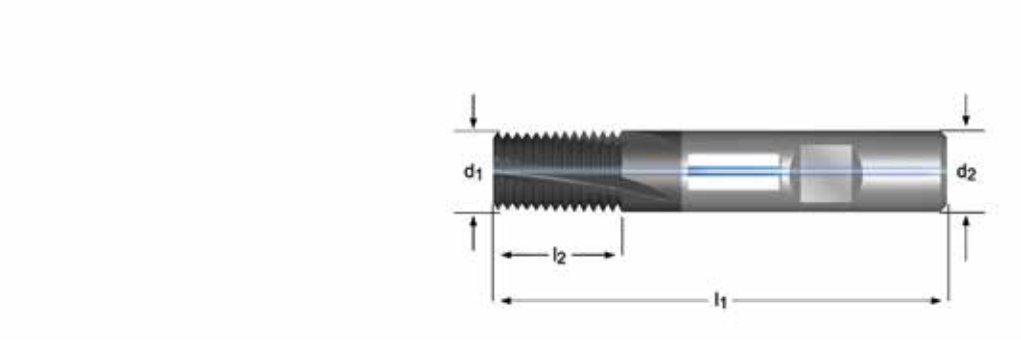

J245

1/4 - 3/4

≥	TPI	d_1 Ø mm	l_2 mm	l_1 mm	d_2 Ø mm	z	J245
1/4	28	4.80	14.0	57	6	3	J2454.8-28
5/16. 3/8	24	6.00	14.0	57	6	3	J2456.0-24
7/16. 1/2	20	8.00	19.0	63	8	4	J2458.0-20
9/16. 5/8	18	10.00	22.0	72	10	4	J24510.0-18
3/4	16	14.00	32.0	83	14	5	J24514.0-16

J280

- G(BSP)标准螺纹铣刀,螺旋角度10°
- Fresa Interpoladora de Rosca G(BSP) com Canal Helicoidal 10°
- Fresa de roscar G(BSP) con ángulo de hélice de 10°
- G(BSP) Thread Mill Spiral Flute 10°

内螺纹和外螺纹
Rosca Interna e Externa
Rosca exterior e interior
Internal and External Thread

J280																					
■	1.1	1.2	1.3	1.4	1.5	1.6	3.1	3.2	3.3	3.4	4.1	4.2	4.3	6.1	6.2	6.3	6.4	7.1	7.2	7.3	
	7.4	8.1	8.2	8.3																	
•	1.7	1.8	2.1	2.2	2.3	2.4	5.1	5.2	5.3	10.1											

J280 G | DORMER | 1.5XD | HM | λ10° | Alcrona Pro | DIN 6535HA

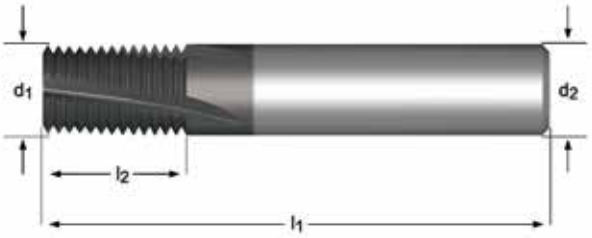

J280

1/8 - 3"

≥	TPI	d_1 Ø mm	l_2 mm	l_1 mm	d_2 Ø mm	z	J280
1/8	28	6.00	15.0	57	6	3	J2806.0-28
1/4	19	10.00	20.0	72	10	4	J28010.0-19
3/8	19	14.00	26.0	83	14	5	J28014.0-19
1/2. 5/8	14	16.00	30.0	92	16	5	J28016.0-14
5/8. 3/4. 7/8	14	20.00	35.0	104	20	5	J28020.0-14
1". 3"	11	25.00	45.0	121	25	6	J28025.0-11

J260

- NPT标准螺纹铣刀,螺旋角度10°
- Fresa Interpoladora de Rosca NPT com Canal Helicoidal 10°
- Fresa de roscar NPT con ángulo de hélice de 10°
- NPT Thread Mill Spiral Flute 10°

内螺纹
Rosca Interna
Rosca interior
Internal Thread

J260																						
▪	1.1	1.2	1.3	1.4	1.5	1.6	3.1	3.2	3.3	3.4	4.1	4.2	4.3	6.1	6.2	6.3	6.4	7.1	7.2	7.3	7.4	8.1	8.2	8.3
•	1.7	1.8	2.1	2.2	2.3	2.4	5.1	5.2	5.3	10.1														

J260 NPT DORMER HM λ10° Alcrona Pro DIN 6535HB

≥	TPI	d_1 Ø mm	l_2 mm	l_1 mm	d_2 Ø mm	z	J260
1/8	27	7.90	11.50	58	8	3	J2607.9-27
1/4. 3/8	18	9.90	15.92	66	10	3	J2609.9-18
1/2. 3/4	14	15.90	20.46	82	16	4	J26015.9-14
1". 2"	11.5	19.90	27.12	92	20	5	J26019.9-11.5

207 - 344

DORMER

螺纹形式	Tipo de Rosca	Forma de Rosca	Thread form
标准	Norma	Estándar	Standard
公差	Tolerância	Tolerancia	Tolerance
孔型	Tipo do furo	Tipo de agujero	Hole Type
深度	Profundidade	Profundidad	Depth
材料	Material	Material	Material
倒锥	Chanfro	Chaflán	Chamfer
槽型	Geometria	Geometría	Flute geometry
加工方向	Direção	Dirección	Direction
涂层	Tratamento	Tratamiento superficial	Coating
冷却	Refrigeração	Refrigeración	Coolant
■ 性能卓越	Excelente para a Aplicação	Excelente para Aplicación	Excellent for Application
● 性能良好	Bom para a Aplicação	Bueno para Aplicación	Good for Application
实例 10 = 外缘处的切削速度，米/分，+/- 10%	Exemplo 10 = Velocidade periférica em metros/minuto +/- 10%	Ejemplo 10 = Velocidad Periférica en metros/minuto +/- 10%	Example 10 = Peripheral speed in metres/minute +/- 10%

AMG	产品型号 尺寸范围 中文	Código Gama de medidas Português	Código de producto Rango de Diámetros Español	Product Codes Size Range English
1.1	铁磁性低碳钢	Aço macio magnético	Acero blando	Magnetic soft steel
1.2	结构钢, 表面渗碳钢	Aço estrutural, Aço cementado	Acero de construcción/cementación	Structural steel, case carburizing steel
1.3	普通碳钢	Aço-carbono	Acero al carbono	Plain Carbon steel
1.4	合金钢	Aço de liga	Acero aleado	Alloy steel
1.5	合金钢, 淬火回火钢	Aço de liga, Aço temperado	Acero aleado/temple y revenido	Alloy steel, Hardened and tempered steel
1.6	合金钢, 淬火回火钢	Aço de liga, Aço temperado	Acero aleado/temple y revenido	Alloy steel, Hardened and tempered steel
1.7	热处理合金钢	Aço de liga temperado	Acero aleado cementado	Alloy steel, Heat treated
1.8	淬火合金钢, 耐磨钢	Aço de liga temperado	Acero aleado cementado	Alloy steel, Hardened & Wear resistant steel
2.1	易切削不锈钢	Aço inoxidável de maquinagem fácil	Acero inoxidable fácil mecanizado	Free machining, Stainless Steel
2.2	奥氏体不锈钢	Austenítico	Austenítico	Austenitic
2.3	铁素体 + 奥氏体, 马氏体不锈钢	Ferrítico + Austenítico + Martensítico	Ferritico, Ferr. + Aust., Marten	Ferritic + Austenitic, Ferritic, Martensitic
2.4	沉淀硬化不锈钢	Aço inoxidável de fácil usinagem	Acero Inoxidable Templado	Precipitation Hardened
3.1	灰铸铁	Grafite laminar	Con grafito laminar	Lamellar graphite
3.2	灰铸铁	Grafite laminar	Con grafito laminar	Lamellar graphite
3.3	球墨铸铁, 可锻铸铁	Grafite nodular/ Ferro fundido maleável	Con graf. laminar, fundic. maleable	Nodular graphite, Malleable Cast Iron
3.4	球墨铸铁, 可锻铸铁	Grafite nodular/ Ferro fundido maleável	Con graf. laminar, fundic. maleable	Nodular graphite, Malleable Cast Iron
4.1	纯钛	Titânio, sem liga	Titanio no aleado	Titanium, unalloyed
4.2	钛合金	Titânio, com liga	Titanio aleado	Titanium, alloyed
4.3	钛合金	Titânio, com liga	Titanio aleado	Titanium, alloyed
5.1	纯镍	Níquel, sem liga	Níquel no aleado	Nickel, unalloyed
5.2	镍合金	Níquel, com liga	Níquel aleado	Nickel, alloyed
5.3	镍合金	Níquel, com liga	Níquel aleado	Nickel, alloyed
6.1	紫铜	Cobre	Cobre	Copper
6.2	β黄铜, 青铜	Latão beta, bronze	β-Latón, bronce	β-Brass, Bronze
6.3	α黄铜	Latão alfa	α-Latón	α-Brass
6.4	高强度青铜	Bronze de alta resistência	Metal AMPCO	High Strength Bronze
7.1	纯铝, 纯镁	Al, Mg, sem liga	Al, Mg, no aleado	Al, Mg, unalloyed
7.2	铝合金, 硅含量 < 0.5%	Al com liga, Si<0.5%	Al aleado con Si < 0.5%	Al alloyed, Si < 0.5%
7.3	铝合金, 硅含量 > 0.5% < 10%	Al com liga, Si>0.5%<10%	Al aleado con Si > 0.5% < 10%	Al alloyed, Si > 0.5% < 10%
7.4	铝合金, 硅含量 > 10% 晶须增强铝合金, 镁合金	Al com liga, Si>10% reforçadas com monocristais filiformes, ligas de Al/Mg	Al aleado, Si>10% Reforzado por filamentos, Al-aleados, Mg-aleados	Al alloyed, Si > 10% Whisker reinforced Al-alloys Mg-alloys
8.1	调整字体大小, 适应排版需要	Termoplásticos	Termoplásticos	Thermoplastics
8.2	热固性塑料	Plásticos termoduros	Plásticos endurecidos por calor	Thermosetting plastics
8.3	增强塑料	Materiais plásticos reforçados	Materiales plásticos reforzados	Reinforced plastic materials
9.1	金属陶瓷	Cerametal (metalocerâmica)	Cerametales (metales-cerámicas)	Cermets (metals-ceramics)
10.1	标准石墨	Grafite standard	Grafito standard	Graphite

	M	M	M	M	M	M	M	M	M	M	M	M	M	M	M	M
	DIN 371	DIN 371<10 376≥12	DIN 371	DIN 371<10 376≥12	DIN 371<10 376≥12	DIN 2174	DIN 352	DIN 352	DIN 352	DIN 371	DIN 376	DIN 371	DIN 376	DIN 371	DIN 376	DIN 371<10 376≥12
	6H	6HX	6HX	6H	6H	6HX	6H	6HX	6H	6H	6H	6H	6H	6HX	6HX	6HX
	2XD	2.5XD	2XD	2XD	2.5XD	3XD	1.5XD	1.5XD	1.5XD	1.5XD	1.5XD	1.5XD	1.5XD	2XD	2XD	2XD
	HM	HM	HM	HM	HM	HM	HSS	HSS-E	HSS	HSS-E PM	HSS-E PM	HSS-E PM	HSS-E PM	HSS-E PM	HSS-E PM	HSS-E PM
	C 2-3	C 2-3	C 2-3	C 2-3	C 2-3	C 2-3.5	C 2-3	C 2-3	C 2-3	A 6-8 C 2-3	A 6-8 C 2-3	C 2-3	C 2-3	C 2-3	C 2-3	C 2-3
				λ15°	λ15°											
	TiCN	Super B	TiCN			TiCN		ST						ST	ST	TiAlN
														SHARK LINE	SHARK LINE	SHARK LINE
	T200	T201	T210	T205	T206	T215	E100	E102	E101	E200	E250	E237	E251	E201	E252	E390
	M3 - M12	M5 - M16	M3 - M12	M3 - M12	M5 - M12	M3 - M10	M1.6 - M52	M3 - M30	M4 - M16	M2 - M10	M3 - M52	M3 - M10	M12 - M24	M3 - M10	M8 - M24	M3 - M20
	NEW	NEW	NEW	NEW	NEW	NEW										
AMG	220	220	220	222	222	223	224	224	224	226	226	226	226	228	228	228
1.1						■60	●1	●1	●1	●12	●12	●12	●12			
1.2						■60	●1	●1	●1	●10	●10	●10	●10			
1.3						■60	●1	●1	●1	●8	●8	●8	●8			
1.4						■40	●1	●1	●1	●6	●6	●6	●6			
1.5						■30	●1	●1	●1	●5	●5	●5	●5			
1.6																
1.7	■6		●6													
1.8	●4		■4													
2.1						■25		●1								
2.2						■25		●1								
2.3						■25		●1								
2.4						●25										
3.1	●60	■60		●40	●40		●1	●1	●1	●14	●14	●14	●14	■15	■15	■30
3.2	●30	■25		●15	●15		●1	●1	●1	●8	●8	●8	●8	■8	■8	■25
3.3		●38		■25	■25		●1	●1	●1	●12	●12	●12	●12	■15	■15	■35
3.4		●33		■15	■15		●1	●1	●1					●8	●8	●25
4.1								●1								
4.2								●1								
4.3								●1								
5.1						■35		●1								
5.2						●15		●1								
5.3								●1								
6.1						●40	●1	●1	●1							
6.2							●1	●1	●1	●16	●16	●16	●16	●20	●20	●30
6.3						●80	●1	●1	●1	●12	●12	●12	●12			
6.4	●7	●10					●1	●1	●1					●5	●5	●5
7.1						■70										
7.2						■80	●1	●1	●1	●20	●20	●20	●20			
7.3		●50		■35	■35	■80	●1	●1	●1	●12	●12	●12	●12			
7.4	●60	■40		■30	■30		●1	●1	●1					●15	●15	●20
8.1																
8.2	●50	●25		●25	●25		●1	●1	●1	●8	●8	●8	●8	■10	■10	■15
8.3	●30	●15		●15	●15		●1	●1	●1							
9.1																
10.1	●25	■25														

AMG	ISO
1.1	P 1
1.2	P 1
1.3	P 2
1.4	P 3
1.5	P 4
1.6	H 1
1.7	H 3
1.8	H 4
2.1	M 1
2.2	M 3
2.3	M 2
2.4	S 2
3.1	K 1
3.2	K 2
3.3	K 3
3.4	K 4
4.1	S 1
4.2	S 2
4.3	S 3
5.1	S 1
5.2	S 2
5.3	S 3
6.1	N 3
6.2	N 4
6.3	N 3
6.4	N 4
7.1	N 1
7.2	N 1
7.3	N 1
7.4	N 2
8.1	O
8.2	O
8.3	O
9.1	H
10.1	O

DORMER

	E500	E501	E504	E303	E600	E610	EP006H	EP006G	EP00TIN	EP016H	E297	E255	E256	E240	E241	E471	
	M	M	M	M	M	M	M	M	M	M	M	M	M	M	M	M	
	ISO 529	ISO 529	ISO 529	DIN 357	ISO 2283	ISO 2283	DIN 371+10 376+12	DIN 371+10 376+12	DIN 371+10 376+12	DIN 371+10 376+12	DIN 371+10 376+12	DIN 371+10 376+12	DIN 371+10 376+12	DIN 371+10 376+12	DIN 371+10 376+12	DIN 371+10 376+12	
	6H	6H	6H	6H	6H	6H	6H	6G	6H	6H	6H	6H	6H	6H	6H	6H	
	1.5XD	1.5XD	1.5XD	2XD	1.5XD	1.5XD	2.5XD	2.5XD	2.5XD	2.5XD	2.5XD	2.5XD	2.5XD	2.5XD	2.5XD	2.5XD	
	HSS	HSS	HSS	HSS-E	HSS-E PM	HSS-E PM	HSS-E PM	HSS-E PM	HSS-E PM	HSS-E PM	HSS-E PM	HSS-E PM	HSS-E PM	HSS-E PM	HSS-E PM	HSS-E PM	
				D18-20 C 2-3	C 2-3	C 2-3	B 3.5-5	B 3.5-5	B 3.5-5	B 3.5-5	B 3.5-5	B 3.5-5	B 3.5-5	B 3.5-5	B 3.5-5	B 3.5-5	
			TiN			TiN			TiN	ST	Cr		TiAlN Top	ST	Super B		
											SHARK LINE	SHARK LINE	SHARK LINE	SHARK LINE	SHARK LINE	SHARK LINE	
	M1 - M56	M3 - M24	M3 - M24	M3 - M20	M3 - M30	M3 - M16	M2 - M30	M3 - M20	M3 - M30	M2 - M30	M3 - M30	M3 - M20	M3 - M20	M3 - M30	M3 - M20	M3 - M20	
AMG	229	229	229	233	234	234	235	235	235	235	237	238	238	239	239	240	ISO
1.1	•7	•7	•14	•12	•7	•14	■25	■25	■40	■25	■25					•25	P 1
1.2	•6	•6	•12	•10	•6	•12	■22	■22	■40	■22	■22				•22	•22	P 1
1.3	•5	•5	•10	•8	•5	•10	■18	■18	■32	■18	■18				•18	•18	P 2
1.4	•4	•4	•8	•6	•4	•8	■16	■16	■27	■16	•16	■16	■30		•16		P 3
1.5	•3	•3	•6	•5	•3	•6	■10	■10	■13	■10	•10	•7	■17	•7	•10		P 4
1.6							•5	•5	•11	•5		•4	•11				H 1
1.7																	H 3
1.8																	H 4
2.1									■8	•7				■8	■14		M 1
2.2									■7	•6				■7	■10		M 3
2.3									•5	•4				■5	■6		M 2
2.4																	S 2
3.1	•12	•12	■18	•14	•12	■18	•15	•15	•22	•15							K 1
3.2	•7	•7	■12	•8	•7	■12	•8	•8	•18	•8							K 2
3.3	•10	•10	■22	•12	•10	■22	•15	•15	•25	•15							K 3
3.4	•5	•5	•12		•5	•12	•8	•8	•18	•8							K 4
4.1							•10	•10	•15								S 1
4.2							•5	•5	•7			•2	•3				S 2
4.3																	S 3
5.1							•12	•12	•18								S 1
5.2							•5	•5	•8			•2	•3				S 2
5.3																	S 3
6.1	•4	•4			•4		■12	■12	■18		■12					•12	N 3
6.2	•10	•10	•20	•16	•10	•20	•30	•30	•45		•30					■30	N 4
6.3	•7	•7	•14	•12	•7	•14	■20	■20	■35		■20					■20	N 3
6.4	•2	•2	•4		•2	•4											N 4
7.1							■16	■16								■16	N 1
7.2	•12	•12	•24	•20	•12	•24	■35	■35								■35	N 1
7.3	•7	•7	•14	•12	•7	•14	■20	■20	■30							■20	N 1
7.4	•5	•5	•10		•5	•10	■15	■15	■22							•15	N 2
8.1							•30	•30								■25	O
8.2	•5	•5	•10	•8	•5	•10			•45								O
8.3	•3	•3	•6		•3	•6											O
9.1																	H
10.1																	O

	E472	E000	E000TIN	E001	E606	E216	E266	E422	E423	E207	E258	E212	E263	EX006H	EX006G	EX00TIN	
	M	M	M	M	M	M	M	M	M	M	M	M	M	M	M	M	
	DIN 371+10 376+12	ISO 529	ISO 529	ISO 529	ISO 2283	DIN 371	DIN 376	DIN 371	DIN 376	DIN 371	DIN 376	DIN 371	DIN 376	DIN 371+10 376+12	DIN 371+10 376+12	DIN 371+10 376+12	
	6H	6H	6H	6H	6H	6H	6H	6H	6H	6H	6H	6H	6H	6H	6G	6H	
	2.5XD	2.5XD	2.5XD	2.5XD	2.5XD	3XD	3XD	3XD	3XD	1.5XD	1.5XD	1.5XD	1.5XD	2.5XD	2.5XD	2.5XD	
	HSS-E PM	HSS-E PM	HSS-E PM	HSS-E PM	HSS-E PM	HSS-E PM	HSS-E PM	HSS-E PM	HSS-E PM	HSS-E PM	HSS-E PM	HSS-E PM	HSS-E PM	HSS-E PM	HSS-E PM	HSS-E PM	
	B 3.5-5	B 3.5-5	B 3.5-5	B 3.5-5	B 3.5-5	B 3.5-5	B 3.5-5	B 3.5-5	B 3.5-5	C 2-3	C 2-3	C 2-3	C 2-3	C 2-3	C 2-3	C 2-3	
										λ15°	λ15°	λ15°	λ15°	λ45°	λ45°	λ45°	
	Super B		TN	ST				TN	TN			TN	TN			TN	
																	
	SHARK LINE																
	M3 - M20	M1.6 - M24	M3 - M20	M1.6 - M24	M3 - M24	M3 - M10	M12 - M24	M3 - M10	M12 - M24	M2 - M10	M4 - M36	M3 - M10	M12 - M36	M2 - M64	M3 - M20	M3 - M30	
AMG	240	241	241	241	242	243	243	243	243	244	244	244	244	246	246	246	ISO
1.1		■25	■40	■25	●20	●22	●22	●35	●35			●35	●35	■25	■25	■40	P 1
1.2	●40	■22	■40	■22	●18	■20	■20	■35	■35	●20	●20	●35	●35	■22	■22	■40	P 1
1.3	●32	■18	■32	■18	●14	■16	■16	■28	■28	■16	■16	■28	■28	■18	■18	■32	P 2
1.4		■16	■27	■16	●10	■12	■12	■24	■24	■12	■12	■24	■24	■16	■16	■27	P 3
1.5		■10	■13	■10	●5	●7	●7	●10	●10	●7	●7	●10	●10	■10	■10	■13	P 4
1.6		●5	●11	●5	●3												H 1
1.7																	H 3
1.8																	H 4
2.1			■8	●7	●6											■8	M 1
2.2			■7	●6	●4											■7	M 3
2.3			●5	●4	●3											●5	M 2
2.4																	S 2
3.1		●15	●22	●15		●12	●12	●18	●18							●22	K 1
3.2		●8	●18	●8		●7	●7	●15	●15							●18	K 2
3.3		●15	●25	●15		●10	●10	●20	●20							●25	K 3
3.4		●8	●18	●8		●5	●5	●15	●15							●18	K 4
4.1		●10	●15			●15	●15	●27	●27					●10	●10	●15	S 1
4.2		●5	●7									●10	●10	●5	●5	●7	S 2
4.3					●3	●4	●4	●5	●5			●7	●7				S 3
5.1		●12	●18		●10	●12	●12	●20	●20					●12	●12	●18	S 1
5.2		●5	●8		●4	●5	●5	●8	●8					●5	●5	●8	S 2
5.3																	S 3
6.1		■12	■18		●10	●12	●12	●18	●18								N 3
6.2	■45	●30	●45			●30	●30	●45	●45								N 4
6.3	●35	■20	■35		●15	●20	●20	●35	●35								N 3
6.4																	N 4
7.1	●35	■16			●10	●16	●16	●25	●25					■16	■16		N 1
7.2	■45	■35			●25	●35	●35	●45	●45	●30	●30	●35	●35	■35	■35		N 1
7.3	■30	■20	■30		●13	●20	●20	●30	●30	●15	●15	●20	●20	■20	■20	■30	N 1
7.4	■20	■15	■22		●10	●15	●15	●20	●20					■15	■15	■22	N 2
8.1	●30	●30			●20	●25	●25	●30	●30								O
8.2			●45														O
8.3																	O
9.1																	H
10.1																	O

DORMER

	M	M	M	M	M	M	M	M	M	M	M	M	M	M	M	M
	DIN 371+10 376+12	DIN 371+10 376+12	DIN 371+10 376+12	DIN 371+10 376+12	DIN 371+10 376+12	DIN 371+10 376+12	DIN 371+10 376+12	DIN 371+10 376+12	DIN 371+10 376+12	DIN 371+10 376+12	ISO 529	ISO 529	ISO 529	DORMER ISO	ISO 2283	DIN 2174
	6H	6H	6H	6H	6H	6H	6H	6H	6H	6H	6H	6H	6H	6H	6H	6HX
	2.5XD	2XD	3XD	2.5XD	2.5XD	2.5XD	2.5XD	3XD	2.5XD	2.5XD	2.5XD	2.5XD	2.5XD	1.5XD	2XD	3XD
	HSS-E PM	HSS-E PM	HSS-E PM	HSS-E PM	HSS-E PM	HSS-E PM	HSS-E PM	HSS-E PM	HSS-E PM	HSS-E PM	HSS-E PM	HSS-E PM	HSS-E PM	HSS	HSS-E PM	HSS-E
	C 2-3	C 2-3	C 2-3	C 2-3	C 2-3	C 2-3	C 2-3	C 2-3	C 2-3	C 2-3	C 2-3	C 2-3	C 2-3	C 2-3	C 2-3	C 2-3.5
	λ45°	λ40°	λ48°	λ45°	λ45°	λ40°	λ40°	λ48°	λ35°	λ35°	λ45°	λ45°	λ45°	λ30°	λ40°	
	ST	Cr	TWIN Top		TWIN Top	ST	Super S	Super S		Super S		TiN	ST	ST		
																
		SHARK LINE	SHARK LINE	SHARK LINE	SHARK LINE	SHARK LINE	SHARK LINE	SHARK LINE	SHARK LINE	SHARK LINE						
	EX016H	E298	E412	E260	E261	E238	E239	E414	E473	E474	E002	E002TIN	E003	E650	E605	E291
	M2 - M64	M3 - M30	M3 - M30	M3 - M20	M3 - M20	M3 - M30	M3 - M20	M3 - M20	M3 - M20	M3 - M20	M2 - M24	M3 - M20	M2 - M24	M3 - M16	M3 - M20	M1.6 - M16
			NEW					NEW								
AMG	246	248	249	250	250	251	251	252	253	253	254	254	254	255	256	257	ISO
1.1	■25	■25	■50						●25		■25	■40	■25	●25		■30	P 1
1.2	■22	■22	■50				●22		●22	●40	■22	■40	■22	●22	●18	■27	P 1
1.3	■18	■18	■35				●18	●32	●18	●32	■18	■32	■18	●18	●14	■23	P 2
1.4	■16	●16	■30	■16	■35		●16	●27			■16	■27	■16	●15	●10	■20	P 3
1.5	■10	●10	■16	●7	■20	●7	●10	●13			■10	■13	■10		●5		P 4
1.6				●4	●11												H 1
1.7																	H 3
1.8																	H 4
2.1	■7		●14			■8	■14	■16				■8	●7		●6		M 1
2.2	■6		●10			■7	■10	■12				■7	●6		●4		M 3
2.3	●4		●6			■5	■6	■8				●5	●4		●3		M 2
2.4								■6									S 2
3.1												●22					K 1
3.2												●18		●8			K 2
3.3												●25					K 3
3.4												●18					K 4
4.1											●10	●15					S 1
4.2				●2	●3						●5	●7					S 2
4.3																	S 3
5.1											●12	●18					S 1
5.2				●2	●3						●5	●8			●4		S 2
5.3																	S 3
6.1		■12							●12								N 3
6.2		●30							■30	■45				●30			N 4
6.3		■20							■20	●35				●20			N 3
6.4																	N 4
7.1			●16						■16	●35	■16			●18	●10	■26	N 1
7.2			●16						■35	■45	■35			●35	●25	■38	N 1
7.3			●35						■20	■30	■20	■30			●13	●22	N 1
7.4			●35						●15	■20	■15	■22			●10		N 2
8.1									■25	●30				●30			O
8.2																	O
8.3																	O
9.1																	H
10.1																	O

	M	M	M	M	M	M	MF	MF	MF	MF	MF	MF	MF	MF	MF	
	DIN 2174	DIN 2174	DIN 2174	DIN 2174	DIN 2174	DIN 2174	DIN 2181	DIN 374	DIN 371	DIN 374	ISO 529	DIN 374	DIN 374	DIN 374	DIN 374	
	6HX	6HX	6HX	6HX	6GX	6GX	6H	6H	6H	6H	6H	6H	6H	6H	6H	
	3XD	3.5XD	3.5XD	3XD	3XD	3XD	1.5XD	1.5XD	1.5XD	1.5XD	1.5XD	2.5XD	2.5XD	2.5XD	2.5XD	
	HSS-E	HSS-E	HSS-E	HSS-E	HSS-E	HSS-E	HSS	HSS-E PM	HSS-E PM	HSS-E PM	HSS	HSS-E PM	HSS-E PM	HSS-E PM	HSS-E PM	
	C 2-3.5	C 2-3.5	C 2-3.5	E 1.5-2	C 2-3.5	E 1.5-2	C 2-3	C 2-3	C 2-3	C 2-3		B 3.5-5	B 3.5-5	B 3.5-5	B 3.5-5	
	TN	TN	TN	TN	TN	TN							TN	ST	Cr	
	E292	E294	E289	E293	E295	E296	E105	E268	E242	E290	E513	EP10	EP10TIN	EP11	E299	
	M1.6 - M16	M3 - M16	M5 - M12	M3 - M16	M3 - M12	M3 - M10	M2.5 - M50	M4 - M50	M8 - M10	M12 - M24	M3 - M50	M4 - M30	M8 - M20	M4 - M30	M4 - M30	
			NEW	NEW												
AMG	257	257	257	258	259	259	260	263	263	263	265	269	269	269	271	ISO
1.1	■55	■55	■55	■55	■55	■55	●1	●12	●12	●12	●7	■25	■40	■25	■25	P 1
1.2	■50	■50	■50	■50	■50	■50	●1	●10	●10	●10	●6	■22	■40	■22	■22	P 1
1.3	■45	■45	■45	■45	■45	■45	●1	●8	●8	●8	●5	■18	■32	■18	■18	P 2
1.4	■40	■40	■40	■40	■40	■40	●1	●6	●6	●6	●4	■16	■27	■16	●16	P 3
1.5	●20	●20	●20	●20	●20	●20	●1	●5	●5	●5	●3	■10	■13	■10	●10	P 4
1.6												●5	●11	●5		H 1
1.7																H 3
1.8																H 4
2.1	■18	■18	■18	■18	■18	■18							■8	●7		M 1
2.2	■15	■15	■15	■15	■15	■15							■7	●6		M 3
2.3	●10	●10	●10	●10	●10	●10							●5	●4		M 2
2.4																S 2
3.1							●1	●14	●14	●14	●12	●15	●22	●15		K 1
3.2							●1	●8	●8	●8	●7	●8	●18	●8		K 2
3.3							●1	●12	●12	●12	●10	●15	●25	●15		K 3
3.4							●1				●5	●8	●18	●8		K 4
4.1	■35	■35	■35	■35	■35	■35						●10	●15			S 1
4.2												●5	●7			S 2
4.3																S 3
5.1	■20	■20	■20	■20	■20	■20						●12	●18			S 1
5.2	●8	●8	●8	●8	●8	●8						●5	●8			S 2
5.3																S 3
6.1	●25	●25	●25	●25	●25	●25	●1				●4	■12	■18		■12	N 3
6.2							●1	●16	●16	●16	●10	●30	●45		●30	N 4
6.3	●40	●40	●40	●40	●40	●40	●1	●12	●12	●12	●7	■20	■35		■20	N 3
6.4							●1				●2					N 4
7.1	■55	■55	■55	■55	■55	■55						■16				N 1
7.2	■55	■55	■55	■55	■55	■55	●1	●20	●20	●20	●12	■35				N 1
7.3	■40	■40	■40	■40	■40	■40	●1	●12	●12	●12	●7	■20	■30			N 1
7.4	●25	●25	●25	●25	●25	●25	●1				●5	■15	■22			N 2
8.1												●30				O
8.2							●1	●8	●8	●8	●5		●45			O
8.3							●1				●3					O
9.1																H
10.1																O

DORMER

	MF	MF	MF	MF	MF	MF	MF	MF	MF	UNC	UNC	UNC	UNC	UNC	UNC	UNC	UNC
	DIN 374	ISO 529	DIN 374	DIN 374	DIN 374	DIN 374	DIN 374	ISO 529	DIN 2174	DIN 352	DIN 371	DIN 376	ISO 529	DIN 2184-1	DIN 2184-1	ISO 529	DIN 2184-1
	6H	6H	6H	6H	6H	6H	6H	6H	6HX	2B	2B	2B	2B	2B	2B	2B	2B
	2.5XD	2.5XD	2.5XD	2.5XD	2.5XD	2XD	2XD	2.5XD	3XD	1.5XD	1.5XD	1.5XD	1.5XD	2.5XD	2.5XD	2.5XD	2.5XD
	HSS-E PM	HSS-E PM	HSS-E PM	HSS-E PM	HSS-E PM	HSS-E PM	HSS-E PM	HSS-E PM	HSS-E	HSS	HSS-E PM	HSS-E PM	HSS	HSS-E PM	HSS-E PM	HSS-E PM	HSS-E PM
	B 3.5-5	B 3.5-5	C 2-3	C 2-3	C 2-3	C 2-3	C 2-3	C 2-3	C 2-3.5	C 2-3	C 2-3	C 2-3		B 3.5-5	B 3.5-5	B 3.5-5	C 2-3
			λ45°	λ45°	λ45°	λ40°	λ40°	λ45°									λ45°
	ST	ST		TN	ST	Cr	ST	ST	TN						ST	ST	
	SHARK LINE					SHARK LINE	SHARK LINE										
	E384	E011	EX10	EX10TIN	EX11	E300	E383	E013	E288	E108	E225	E275	E515	EP20	EP21	E021	EX20
	M6 - M20	M4 - M24	M4 - M30	M8 - M20	M4 - M30	M4 - M30	M6 - M20	M4 - M22	M5 - M12	No.5 - 1"	No.2 - 1/4	5/16 - 1.1/2	No.1 - 2"	No.4 - 1"	No.4 - 1"	No.2 - 1"	No.4 - 1"
									NEW								
AMG	272	273	274	274	274	276	277	278	279	280	281	281	282	284	284	285	286	ISO
1.1		■25	■25	■40	■25	■25		■25	■55	●1	●12	●12	●7	■25	■25	■25	■25	P 1
1.2		■22	■22	■40	■22	■22		■22	■50	●1	●10	●10	●6	■22	■22	■22	■22	P 1
1.3		■18	■18	■32	■18	■18		■18	■45	●1	●8	●8	●5	■18	■18	■18	■18	P 2
1.4		■16	■16	■27	■16	●16		■16	■40	●1	●6	●6	●4	■16	■16	■16	■16	P 3
1.5	●7	■10	■10	■13	■10	●10	●7	■10	●20	●1	●5	●5	●3	■10	■10	■10	■10	P 4
1.6		●5												●5	●5	●5		H 1
1.7																		H 3
1.8																		H 4
2.1	■8	●7		■8	■7		■8	●7	■18						●7	●7		M 1
2.2	■7	●6		■7	■6		■7	●6	■15						●6	●6		M 3
2.3	■5	●4		●5	●4		■5	●4	●10						●4	●4		M 2
2.4																		S 2
3.1		●15		●22						●1	●14	●14	●12	●15	●15	●15		K 1
3.2		●8		●18						●1	●8	●8	●7	●8	●8	●8		K 2
3.3		●15		●25						●1	●12	●12	●10	●15	●15	●15		K 3
3.4		●8		●18						●1			●5	●8	●8	●8		K 4
4.1			●10	●15					■35					●10			●10	S 1
4.2			●5	●7										●5			●5	S 2
4.3																		S 3
5.1			●12	●18					■20					●12			●12	S 1
5.2			●5	●8					●8					●5			●5	S 2
5.3																		S 3
6.1						■12			●25	●1			●4	■12				N 3
6.2						●30				●1	●16	●16	●10	●30				N 4
6.3						■20			●40	●1	●12	●12	●7	■20				N 3
6.4										●1			●2					N 4
7.1			■16						■55					■16			■16	N 1
7.2			■35						■55	●1	●20	●20	●12	■35			■35	N 1
7.3			■20	■30					■40	●1	●12	●12	●7	■20			■20	N 1
7.4			■15	■22					●25	●1			●5	■15			■15	N 2
8.1														●30				O
8.2										●1	●8	●8	●5					O
8.3										●1			●3					O
9.1																		H
10.1																		O

	UNC	UNC	UNC	UNC	UNF	UNF	UNF	UNF	UNF	UNF	UNF	UNF	UNF	UNF	UNF	UNF	UN	BSW
	DIN 2184-1	ISO 529	DORMER DIN	DIN 2184-1	DIN 2181	DIN 371	DIN 374	ISO 529	DIN 2184-1	DIN 2184-1	ISO 529	DIN 2184-1	DIN 2184-1	ISO 529	DORMER DIN	DIN 2184-1	ISO 529	DIN 351
	2B	2B	2B	2BX	2B	2B	2B	2B	2B	2B	2B	2B	2B	2B	Medium	2BX	2B	Medium
	2.5XD	2.5XD	1.5XD	3.5XD	1.5XD	1.5XD	1.5XD	1.5XD	2.5XD	2.5XD	2.5XD	2.5XD	2.5XD	2.5XD	1.5XD	3.5XD	1.5XD	1.5XD
	HSS-E PM	HSS-E PM	HSS	HSS-E	HSS	HSS-E PM	HSS-E PM	HSS	HSS-E PM	HSS-E PM	HSS-E PM	HSS-E PM	HSS-E PM	HSS-E PM	HSS	HSS-E	HSS	HSS
	C 2-3	C 2-3	C 2-3	C 2-3.5	C 2-3	C 2-3	C 2-3		C 2-3	C 2-3	B 3.5-5	C 2-3	C 2-3	C 2-3	C 2-3	C 2-3.5	C 2-3	C 2-3
	λ45°	λ45°	λ30°									λ45°	λ45°	λ45°	λ30°			
	ST	ST	ST	TiN						ST	ST		ST	ST	ST	TiN		
	EX21	E023	E651	E287	E111	E229	E278	E524	EP30	EP31	E031	EX30	EX31	E033	E654	E286	E570	E115
	No.4 - 1"	No.2 - 1"	No.6 - 5/8	No.4 - 1/2	No.5 - 1"	No.2 - 1/4	5/16 - 1.1/2	No.0 - 1.1/2	No.8 - 1"	No.8 - 1"	No.8 - 1"	No.8 - 1"	No.8 - 1"	No.8 - 1"	No.8 - 5/8	No.4 - 1/2	1/4 - 1.5/16	1/8 - 1"
				NEW												NEW		
AMG	286	287	288	289	290	291	291	292	294	294	295	296	296	297	298	299	300	301	ISO
1.1	■25	■25	●25	■55	●1	●12	●12	●7	■25	■25	■25	■25	■25	■25	●25	■55	●7	●1	P 1
1.2	■22	■22	●22	■50	●1	●10	●10	●6	■22	■22	■22	■22	■22	■22	●22	■50	●6	●1	P 1
1.3	■18	■18	●18	■45	●1	●8	●8	●5	■18	■18	■18	■18	■18	■18	●18	■45	●5	●1	P 2
1.4	■16	■16	●15	■40	●1	●6	●6	●4	■16	■16	■16	■16	■16	■16	●15	■40	●4	●1	P 3
1.5	■10	■10		●20	●1	●5	●5	●3	■10	■10	■10	■10	■10	■10		●20	●3	●1	P 4
1.6									●5	●5	●5			●5					H 1
1.7																			H 3
1.8																			H 4
2.1	■7	●7		■18						●7	●7		■7	●7		■18			M 1
2.2	■6	●6		■15						●6	●6		■6	●6		■15			M 3
2.3	●4	●4		●10						●4	●4		●4	●4		●10			M 2
2.4																			S 2
3.1					●1	●14	●14	●12	●15	●15	●15						●12	●1	K 1
3.2			●8		●1	●8	●8	●7	●8	●8	●8				●8		●7	●1	K 2
3.3					●1	●12	●12	●10	●15	●15	●15						●10	●1	K 3
3.4					●1			●5	●8	●8	●8						●5	●1	K 4
4.1				■35					●10			●10				■35			S 1
4.2									●5			●5							S 2
4.3																			S 3
5.1				■20					●12			●12				■20			S 1
5.2				●8					●5			●5				●8			S 2
5.3																			S 3
6.1				●25	●1			●4	■12							●25	●4	●1	N 3
6.2			●30		●1	●16	●16	●10	●30						●30		●10	●1	N 4
6.3			●20	●40	●1	●12	●12	●7	■20						●20	●40	●7	●1	N 3
6.4					●1			●2									●2	●1	N 4
7.1			●18	■55					■16			■16			●18	■55			N 1
7.2			●35	■55	●1	●20	●20	●12	■35			■35			●35	■55	●12	●1	N 1
7.3				■40	●1	●12	●12	●7	■20			■20				■40	●7	●1	N 1
7.4				●25	●1			●5	■15			■15				●25	●5	●1	N 2
8.1			●30						●30						●30				O
8.2					●1	●8	●8	●5									●5	●1	O
8.3					●1			●3									●3	●1	O
9.1																			H
10.1																			O

DORMER

	BSW	BSW	BSW	BSF	BSF	BSF	BA	BA	BA	G	G	G	G	G	G	G
	ISO 529	ISO 529	ISO 529	ISO 529	ISO 529	ISO 529	ISO 529	ISO 529	ISO 529	DIN 5157	DIN 5156	ISO 2284	DIN 5156	DIN 5156	DORMER ISO	DIN 5156
	Medium	Medium	Medium	Medium	Medium	Medium	Normal	Normal	Normal	Normal	Normal	Normal	Normal	Normal	Normal	Normal
	1.5XD	2.5XD	2XD	1.5XD	2.5XD	2XD	1.5XD	2.5XD	2XD	1.5XD	1.5XD	1.5XD	2.5XD	2.5XD	2.5XD	2.5XD
	HSS	HSS	HSS	HSS	HSS	HSS	HSS	HSS	HSS	HSS	HSS-E PM	HSS	HSS-E PM	HSS-E PM	HSS-E PM	HSS-E PM
		B 3.5-5	C 2-3		B 3.5-5	C 2-3		B 3.5-5	C 2-3	C 2-3	C 2-3		B 3.5-5	B 3.5-5	B 3.5-5	C 2-3
			λ40°			λ40°			λ40°							λ45°
		ST	ST		ST	ST		ST	ST					ST	ST	
	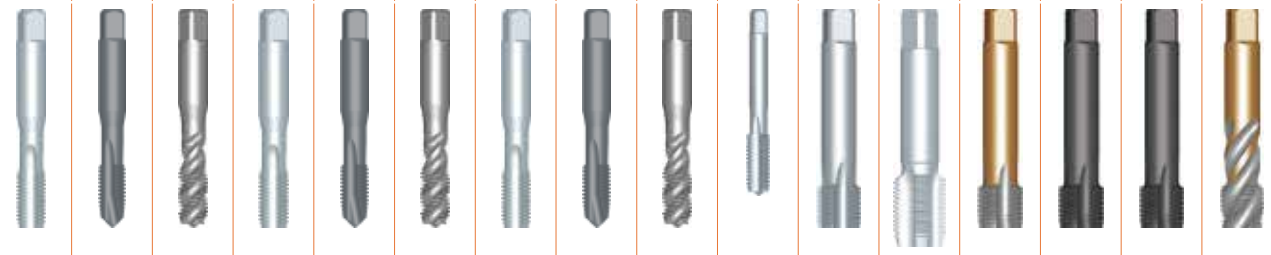															
	E531	E534	E533	E536	E539	E538	E542	E545	E544	E119	E282	E547	EP40	EP41	E041	EX40
	1/8 - 1"	1/8 - 3/4	1/8 - 3/4	3/16 - 1"	1/4 - 1/2	1/4 - 1/2	No.10 - No.0	No.10 - No.2	No.8 - No.2	1/8 - 3"	1/8 - 1.1/2	1/8 - 2"	1/8 - 1"	1/8 - 1"	1/8 - 3/4	1/8 - 1.1/2

AMG	302	304	305	306	307	308	309	310	311	312	313	314	315	315	316	317	ISO
1.1	•7	■20		•22	■20		•7	■20		•1	•12	•7	■25	■25	■25	■25	P 1
1.2	•6	■18	■18	•20	■18	■18	•6	■18	■18	•1	•10	•6	■22	■22	■22	■22	P 1
1.3	•5	■14	■14	•16	■14	■14	•5	■14	■14	•1	•8	•5	■18	■18	■18	■18	P 2
1.4	•4	■10	■10	•12	■10	■10	•4	■10	■10	•1	•6	•4	■16	■16	■16	■16	P 3
1.5	•3	•5	•5	•7	•5	•5	•3	•5	•5	•1	•5	•3	■10	■10	■10	■10	P 4
1.6		•3		•4	•3			•3					•5	•5	•5		H 1
1.7																	H 3
1.8																	H 4
2.1		■6	■6	•7	■6	■6		•6	■6					•7	•7		M 1
2.2		■4	■4	•5	■4	■4		•4	■4					•6	•6		M 3
2.3		■3	■3	•7	■3	■3		•3	■3					•4	•4		M 2
2.4																	S 2
3.1	•12			•12			•12			•1	•14	•12	•15	•15	•15		K 1
3.2	•7			•7			•7			•1	•8	•7	•8	•8	•8		K 2
3.3	•10			•10			•10			•1	•12	•10	•15	•15	•15		K 3
3.4	•5			•5			•5			•1		•5	•8	•8	•8		K 4
4.1													•10			•10	S 1
4.2													•5			•5	S 2
4.3		•3			•3			•3									S 3
5.1		•10			•10			•10					•12			•12	S 1
5.2		•4	•4		•4	•4		•4	•4				•5			•5	S 2
5.3																	S 3
6.1	•4	•10		■12	•10		•4	•10		•1		•4	■12				N 3
6.2	•10			•30			•10			•1	•16	•10	•30				N 4
6.3	•7	•15		•20	•15		•7	•15		•1	•12	•7	■20				N 3
6.4	•2			•4			•2			•1		•2					N 4
7.1		•10	•10		•10	•10		•10	•10				■16			■16	N 1
7.2	•12	•25	•25	•35	•25	•25	•12	•25	•25	•1	•20	•12	■35			■35	N 1
7.3	•7	•13	•13	•20	•13	•13	•7	•13	•13	•1	•12	•7	■20			■20	N 1
7.4	•5	•10	•10	•15	•10	•10	•5	•10	•10	•1		•5	■15			■15	N 2
8.1		•20			•20			•20					•30			•30	O
8.2	•5			•12			•5			•1	•8	•5					O
8.3	•3			•7			•3			•1		•3					O
9.1																	H
10.1																	O

	G	G	G	EGM	EGM	Rc	NPT	NPT	NPT	NPT	NPT	NPTF	NPSF	NPSF	NPSM	PG
	DIN 5156	DIN 5156	DORMER ISO	DORMER ISO	DORMER ISO	ISO 2284	DORMER ANSI	ANSI B94.9	ANSI B94.9	ANSI B94.9	ANSI	ANSI B94.9	ANSI B94.9	ANSI B94.9	ANSI B94.9	DIN 40432
	Normal	Normal	Normal	6H	6H	Normal	Normal	Normal	Normal	Normal	Normal	Normal	Normal	Normal	Normal	Normal
	2.5XD	2XD	2.5XD	1.5XD	2XD	1.5XD	1.5XD	1.5XD	1.5XD	1.5XD	1.5XD	1.5XD	1.5XD	1.5XD	1.5XD	1.5XD
	HSS-E PM	HSS-E PM	HSS-E PM	HSS	HSS	HSS	HSS-E PM	HSS	HSS	HSS	HSS	HSS	HSS	HSS	HSS	HSS
	C 2-3	C 2-3	C 2-3	C 2-3	C 2-3	C 2-3	C 2-3	C 2-3	C 2-3	C 2-3		C 2-3	C 2-3	C 2-3	C 2-3	
	λ45°	λ40°	λ45°		λ40°						λ27°					
	ST	ST	ST						TN					TN		
		SHARK LINE														
	EX41	E382	E043	E620	E621	E550	E714	E710	E721	E711	E653	E712	E709	E720	E708	E243
	1/8 - 1.1/2	1/8 - 1"	1/8 - 3/4	M3 - M16	M3 - M16	1/8 - 2"	1/8 - 1"	1/16 - 2"	1/8 - 1"	1/8 - 1.1/2	1/8 - 1"	1/16 - 1.1/4	1/8 - 3/4	1/8 - 3/4	1/8 - 1"	No.7 - No.36
AMG	317	318	319	320	321	322	323	324	324	325	326	327	328	328	329	330	ISO
1.1	■25		■25	●7		●22	●4	●4	●4	●4	●25	●4	●4	●4	●4	●12	P 1
1.2	■22		■22	●6	●18	●20	●4	●4	●4	●4	●22	●4	●4	●4	●4	●10	P 1
1.3	■18		■18	●5	●14	●16	■6	●6	■6	■6	●18	■6	■6	■6	■6	●8	P 2
1.4	■16		■16	●4	●10	●12	■5	●5	■5	■5	●15	■5	■5	■5	■5	●6	P 3
1.5	■10	●7	■10	●3	●5	●7	●3	●3	●3	●3		●3	●3	●3	●3	●5	P 4
1.6			●5			●4											H 1
1.7																	H 3
1.8																	H 4
2.1	■7	■8	●7		●6	●7											M 1
2.2	■6	■7	●6		●4	●5											M 3
2.3	●4	■5	●4		●3	●7											M 2
2.4																	S 2
3.1				●12		■12	●6	●6	■6	●6		●6	●6	■6	●6	●14	K 1
3.2				●7		■7	●4	●4	■4	●4	●8	●4	●4	■4	●4	●8	K 2
3.3				●10		■10	●6	●6	■6	●6		●6	●6	■6	●6	●12	K 3
3.4				●5		■5	●4	●4	■4	●4		●4	●4	■4	●4		K 4
4.1																	S 1
4.2																	S 2
4.3																	S 3
5.1																	S 1
5.2					●4												S 2
5.3																	S 3
6.1				●4		■12											N 3
6.2				●10		●30	●11	●11	●11	●11	●30	●11	●11	●11	●11	●16	N 4
6.3				●7		●20					●20					●12	N 3
6.4				●2		●4											N 4
7.1					●10						●18						N 1
7.2				●12	●25	●35					●35					●20	N 1
7.3				●7	●13	●20	●11	●11	●11	●11		●11	●11	●11	●11	●12	N 1
7.4				●5	●10	●15	●7	●7	●7	●7		●7	●7	●7	●7		N 2
8.1							●4	●4	●4	●4	●30	●4	●4	●4	●4		O
8.2				●5		●12										●8	O
8.3				●3		●7											O
9.1																	H
10.1																	O

DORMER











AMG	L119 Set 331	L126 Set 332	L113 Set 333	L114 Set 334	L115 Set 335	L000 Set NEW 336	L001 Set NEW 337	L002 Set NEW 338	L120 Set 339	L110 16.00 - 4“ 342	L112 BT1 - No.7 NEW 343	ISO
1.1												P 1
1.2												P 1
1.3												P 2
1.4												P 3
1.5												P 4
1.6												H 1
1.7												H 3
1.8												H 4
2.1												M 1
2.2												M 3
2.3												M 2
2.4												S 2
3.1												K 1
3.2												K 2
3.3												K 3
3.4												K 4
4.1												S 1
4.2												S 2
4.3												S 3
5.1												S 1
5.2												S 2
5.3												S 3
6.1												N 3
6.2												N 4
6.3												N 3
6.4												N 4
7.1												N 1
7.2												N 1
7.3												N 1
7.4												N 2
8.1												O
8.2												O
8.3												O
9.1												H
10.1												O

NO1 - NO9

NO1 =		A 6-8	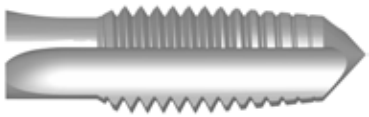
NO2 =		B 4-6	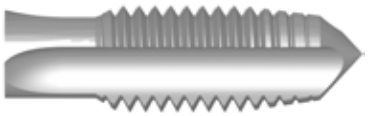
NO3 =		C 2-3	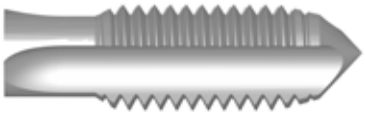

ISO	NO6 =	NO1 + NO2 + NO3
	NO7 =	NO2 + NO3 *

ANSI	NO6 =	NO1 (taper) + NO2 (plug) + NO3 (bottoming)

NO4 =		A 6-8	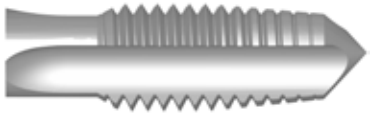
NO5 =		B 3.5-5	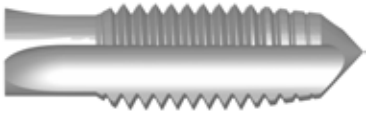

DIN ISO	NO8 =	NO3 + NO4 + NO5
	NO9 =	NO3 + NO4

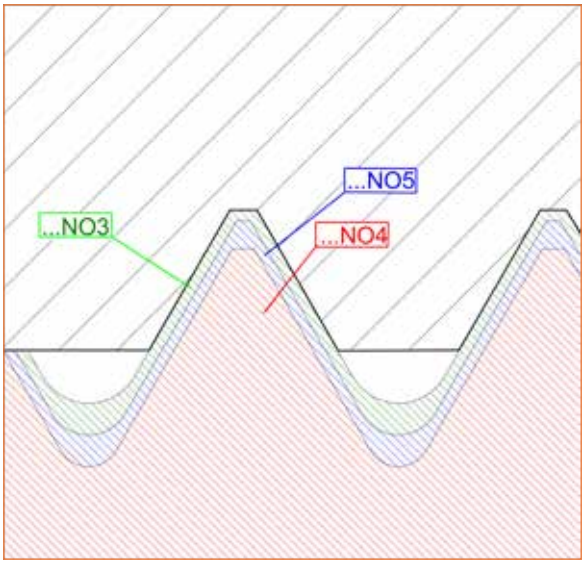

* E550
E710 NO7 = NO3 (truncated) + NO3

DORMER

T200

- M 机用直槽丝锥
- M Macho Máquina Canal Reto
- M Machos de máquina Estrías rectas
- M Machine Tap Straight Flute

T201

- M 机用直槽丝锥,带内冷
- M Macho Máquina Canal Reto com Refrigeração Interna
- M Machos de Máq. Estrías Rectas, Refrigeración Interna
- M Machine Tap Straight flute, Internal Coolant

T210

- M 机用直槽丝锥
- M Macho Máquina Canal Reto
- M Machos de máquina Estrías rectas
- M Machine Tap Straight Flute

T200	▪	1.7
	•	1.8 3.1 3.2 6.4 7.4 8.2 8.3 10.1
T201	▪	3.1 3.2 7.4 10.1
	•	3.3 3.4 6.4 7.3 8.2 8.3
T210	▪	1.8
	•	1.7

T200	M	DIN 371	6H		2XD	HM	C 2-3			TiCN	
T201	M	DIN 371≤10 376≥12	6HX		2.5XD	HM	C 2-3			Super B	
T210	M	DIN 371	6HX		2XD	HM	C 2-3			TiCN	

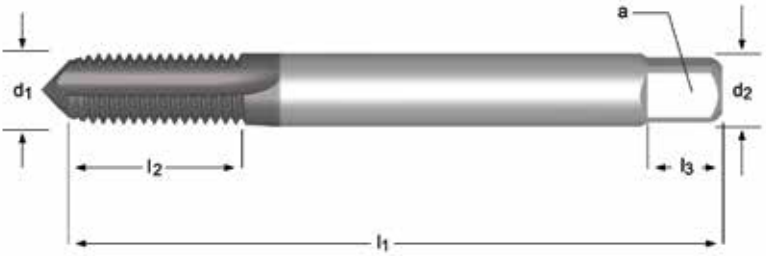

M	P mm	l_1 mm	l_2 mm	d_2 Ø mm	a mm	l_3 mm	z	↔	l_4 mm	T200	T201	T210
3	0.50	56	10	3.5	2.7	6	3	2.6	-	T200M3		
3	0.50	56	8	3.5	2.7	6	4	2.6				T210M3
4	0.70	63	11	4.5	3.4	6	5	3.4				T210M4
4	0.70	63	13	4.5	3.4	6	3	3.4	-	T200M4		
5	0.80	70	13.5	6.0	4.9	8	5	4.3				T210M5
5	0.80	70	16	6.0	4.9	8	3	4.3	-	T200M5		
5	0.80	70	16	6.0	4.9	8	4	4.3	-		T201M5	
6	1.00	80	16.5	6.0	4.9	8	5	5.1				T210M6
6	1.00	80	19	6.0	4.9	8	3	5.1	30	T200M6		
6	1.00	80	19	6.0	4.9	8	4	5.1	30		T201M6	
8	1.25	90	21.5	8.0	6.2	9	5	6.9				T210M8
8	1.25	90	22	8.0	6.2	9	3	6.9	35	T200M8		

M	P mm	l_1 mm	l_2 mm	d_2 Ø mm	⧄ a mm	l_3 mm	z	↔	l_4 mm	T200	T201	T210
8	1.25	90	22	8.0	6.2	9	4	6.9	35		T201M8	
10	1.50	100	24	10.0	8.0	11	3	8.7	39	T200M10		
10	1.50	100	24	10.0	8.0	11	4	8.7	39		T201M10	
10	1.50	100	27	10.0	8.0	11	5	8.7				T210M10
12	1.75	110	23	9.0	7.0	10	3	10.4	-	T200M12		
12	1.75	110	23	9.0	7.0	10	4	10.4	-		T201M12	
12	1.75	110	32	12.0	9.0	12	6	10.4				T210M12
16	2.00	110	25	12.0	9.0	12	4	14.25	-		T201M16	

DORMER

T205

- M 机用丝锥,15°螺旋槽
- M Macho Máquina Canal Helicoidal 15°
- M Machos de máquina Estrías helicoidales a 15°
- M Machine Tap Spiral Flute 15°

T206

- M 机用丝锥,15°螺旋槽,带内冷
- M Macho Máquina Canal Helicoidal 15° com Refrigeração Interna
- M Machos de máquina Estrías helicoidales a 15°, Refrigeración Interna
- M Machine Tap Spiral Flute 15°, Internal Coolant

T205; T206					
	▪	3.3	3.4	7.3	7.4
	•	3.1	3.2	8.2	8.3

T205	M	DIN 371≤10 376≥12	6H		2XD	HM	C 2-3	λ15°			
T206	M	DIN 371≤10 376≥12	6H		2.5XD	HM	C 2-3	λ15°			

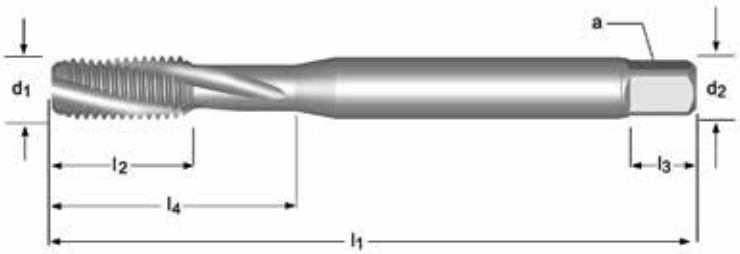

T205	T206
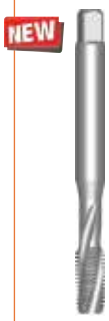	
M3 - M12	M5 - M12

M	P mm	l_1 mm	l_2 mm	d_2 Ø mm	a mm	l_3 mm	z	↔	l_4 mm	T205	T206
3	0.50	56	10	3.5	2.7	6	3	2.6	-	T205M3	
4	0.70	63	13	4.5	3.4	6	3	3.4	-	T205M4	
5	0.80	70	16	6.0	4.9	8	3	4.3	-	T205M5	T206M5
6	1.00	80	19	6.0	4.9	8	3	5.1	30	T205M6	T206M6
8	1.25	90	22	8.0	6.2	9	3	6.9	35	T205M8	T206M8
10	1.50	100	24	10.0	8.0	11	3	8.7	39	T205M10	T206M10
12	1.75	110	23	9.0	7.0	10	3	10.4	-	T205M12	T206M12

T215

- M 机用挤压丝锥
- M Macho Máquina de Laminação
- M Machos de laminación
- M Machine Forming Tap

T215		
	▪	1.1 1.2 1.3 1.4 1.5 2.1 2.2 2.3 5.1 7.1 7.2 7.3
	•	2.4 5.2 6.1 6.3

T215 M DIN 2174 6HX 3XD HM C 2-3.5 TiCN

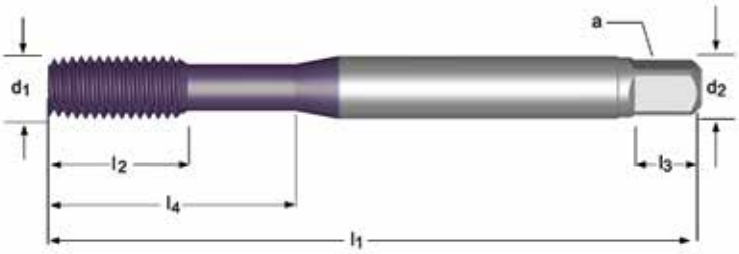

T215

NEW

M3 - M10

M	P mm	l_1 mm	l_2 mm	d_2 Ø mm	a mm	l_3 mm	z		l_4 mm	T215
3	0.50	56	10	3.5	2.7	6	4	2.8	-	T215M3
4	0.70	63	13	4.5	3.4	6	5	3.7	-	T215M4
5	0.80	70	16	6.0	4.9	8	5	4.6	-	T215M5
6	1.00	80	19	6.0	4.9	8	5	5.5	30	T215M6
8	1.25	90	22	8.0	6.2	9	5	7.4	35	T215M8
10	1.50	100	24	10.0	8.0	11	5	9.3	39	T215M10

E100 E102 E101

- M 手用直槽丝锥
- M Macho Manual Canal Reto
- M Machos de mano Estrías rectas
- M Hand Tap Straight Flute

E100	•	1.1	1.2	1.3	1.4	1.5	3.1	3.2	3.3	3.4	6.1	6.2	6.3	6.4	7.2	7.3	7.4	8.2	8.3		
E102	•	1.1	1.2	1.3	1.4	1.5	2.1	2.2	2.3	3.1	3.2	3.3	3.4	4.1	4.2	4.3	5.1	5.2	5.3	6.1	6.2
		6.3	6.4	7.2	7.3	7.4	8.2	8.3													
E101	•	1.1	1.2	1.3	1.4	1.5	3.1	3.2	3.3	3.4	6.1	6.2	6.3	6.4	7.2	7.3	7.4	8.2	8.3		

E100	M	DIN 352	6H		1.5XD	HSS	C 2-3				L119 331	L120 339
E102	M	DIN 352	6HX		1.5XD	HSS-E	C 2-3			ST		
E101	M	DIN 352	6H		1.5XD	HSS	C 2-3					

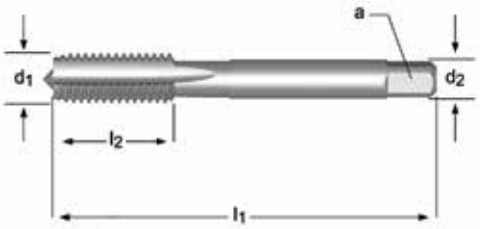

E100	E102	E101
		
M1.6 - M52	M3 - M30	M4 - M16

M	P mm	l_1 mm	l_2 mm	d_2 Ø mm	a mm	z		E100	E102	E101
1.6	0.35	32	7	2.5	2.1	3	1.25	E100M1.6NO3		
1.6	0.35	32	7	2.5	2.1	3	1.25	E100M1.6NO8		
2	0.40	36	8	2.8	2.1	3	1.6	E100M2NO3		
2	0.40	36	8	2.8	2.1	3	1.6	E100M2NO8		
2.5	0.45	40	9	2.8	2.1	3	2.05	E100M2.5NO3		
2.5	0.45	40	9	2.8	2.1	3	2.05	E100M2.5NO8		
3	0.50	40	10	3.5	2.7	3	2.5	E100M3NO3		
3	0.50	40	10	3.5	2.7	3	2.5	E100M3NO8	E102M3NO8 [1]	
3.5	0.60	45	10	4.0	3.0	3	2.9	E100M3.5NO3		
3.5	0.60	45	10	4.0	3.0	3	2.9	E100M3.5NO8		
4	0.70	45	12	4.5	3.4	3	3.3	E100M4NO3		E101M4NO3
4	0.70	45	12	4.5	3.4	3	3.3	E100M4NO8	E102M4NO8 [1]	E101M4NO8
5	0.80	50	14	6.0	4.9	3	4.2	E100M5NO3		E101M5NO3
5	0.80	50	14	6.0	4.9	3	4.2	E100M5NO8	E102M5NO8 [1]	E101M5NO8
6	1.00	56	16	6.0	4.9	3	5	E100M6NO3		E101M6NO3
6	1.00	56	16	6.0	4.9	3	5	E100M6NO8	E102M6NO8 [1]	E101M6NO8
7	1.00	56	16	6.0	4.9	3	6	E100M7NO3		
7	1.00	56	16	6.0	4.9	3	6	E100M7NO8		
8	1.25	63	19	6.0	4.9	3	6.8	E100M8NO3		E101M8NO3
8	1.25	63	19	6.0	4.9	3	6.8	E100M8NO8	E102M8NO8 [1]	E101M8NO8
9	1.25	63	20	7.0	5.5	3	7.8	E100M9NO3		
9	1.25	63	20	7.0	5.5	3	7.8	E100M9NO8		
10	1.50	70	22	7.0	5.5	3	8.5	E100M10NO3		E101M10NO3
10	1.50	70	22	7.0	5.5	3	8.5	E100M10NO8	E102M10NO8 [1]	E101M10NO8

NO1 - NO9 219

[1] No4 带导向 / NO4 com guia piloto / NO4 con piloto guía / No4 with pilot guide

M	P mm	l_1 mm	l_2 mm	d_2 Ø mm	a mm	z	↔	E100	E102	E101
12	1.75	75	25	9.0	7.0	4	10.3	E100M12NO3		E101M12NO3
12	1.75	75	25	9.0	7.0	4	10.3	E100M12NO8	E102M12NO8 [1]	E101M12NO8
14	2.00	80	25	11.0	9.0	4	12	E100M14NO3		E101M14NO3
14	2.00	80	25	11.0	9.0	4	12	E100M14NO8	E102M14NO8 [1]	E101M14NO8
16	2.00	80	25	12.0	9.0	4	14	E100M16NO3		E101M16NO3
16	2.00	80	25	12.0	9.0	4	14	E100M16NO8	E102M16NO8 [1]	E101M16NO8
18	2.50	95	32	14.0	11.0	4	15.5	E100M18NO3		
18	2.50	95	32	14.0	11.0	4	15.5	E100M18NO8	E102M18NO8 [1]	
20	2.50	95	32	16.0	12.0	4	17.5	E100M20NO3		
20	2.50	95	32	16.0	12.0	4	17.5	E100M20NO8	E102M20NO8 [1]	
22	2.50	100	34	18.0	14.5	4	19.5	E100M22NO3		
22	2.50	100	34	18.0	14.5	4	19.5	E100M22NO8		
24	3.00	110	38	18.0	14.5	4	21	E100M24NO3		
24	3.00	110	38	18.0	14.5	4	21	E100M24NO8	E102M24NO8 [1]	
27	3.00	110	38	20.0	16.0	4	24	E100M27NO3		
27	3.00	110	38	20.0	16.0	4	24	E100M27NO8	E102M27NO8 [1]	
30	3.50	125	45	22.0	18.0	4	26.5	E100M30NO3		
30	3.50	125	45	22.0	18.0	4	26.5	E100M30NO8	E102M30NO8 [1]	
33	3.50	125	50	25.0	20.0	4	29.5	E100M33NO3		
33	3.50	125	50	25.0	20.0	4	29.5	E100M33NO8		
36	4.00	150	56	28.0	22.0	4	32	E100M36NO3		
36	4.00	150	56	28.0	22.0	4	32	E100M36NO8		
39	4.00	150	60	32.0	24.0	4	35	E100M39NO3		
39	4.00	150	60	32.0	24.0	4	35	E100M39NO8		
42	4.50	150	60	32.0	24.0	4	37.5	E100M42NO3		
42	4.50	150	60	32.0	24.0	4	37.5	E100M42NO8		
45	4.50	160	65	36.0	29.0	6	40.5	E100M45NO3		
45	4.50	160	65	36.0	29.0	6	40.5	E100M45NO8		
48	5.00	180	70	36.0	29.0	6	43	E100M48NO3		
48	5.00	180	70	36.0	29.0	6	43	E100M48NO8		
52	5.00	180	70	40.0	32.0	6	47	E100M52NO3		
52	5.00	180	70	40.0	32.0	6	47	E100M52NO8		

NO1 - NO9
219

[1] No4 带导向 / NO4 com guia piloto / NO4 con piloto guía / No4 with pilot guide

DORMER

E200 E250 E237 E251

- M 机用直槽丝锥 — 提供HSS-E,直到库存更新至HSS-E PM
- M Macho Máquina Canal Reto — Fornecido em HSS-E até disponibilidade do novo estoque
- M Machos de máquina Estrías rectas — Suministrado en HSS-E hasta disponibilidad de nuevo stock
- M Machine Tap Straight Flute — Supplied in HSS-E until new stock available

E200; E250; E237; E251 • 1.1 1.2 1.3 1.4 1.5 3.1 3.2 3.3 6.2 6.3 7.2 7.3 8.2

E200	M	DIN 371	6H		1.5XD	HSS-E PM	A 6-8 C 2-3					
E250	M	DIN 376	6H		1.5XD	HSS-E PM	A 6-8 C 2-3					
E237	M	DIN 371	6H		1.5XD	HSS-E PM	C 2-3					
E251	M	DIN 376	6H		1.5XD	HSS-E PM	C 2-3					

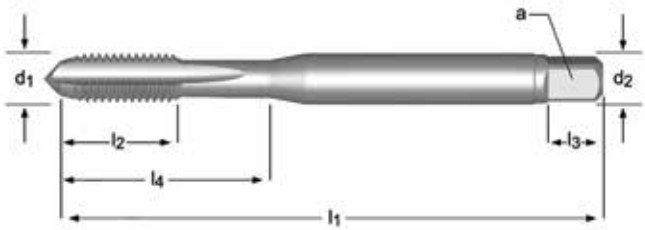

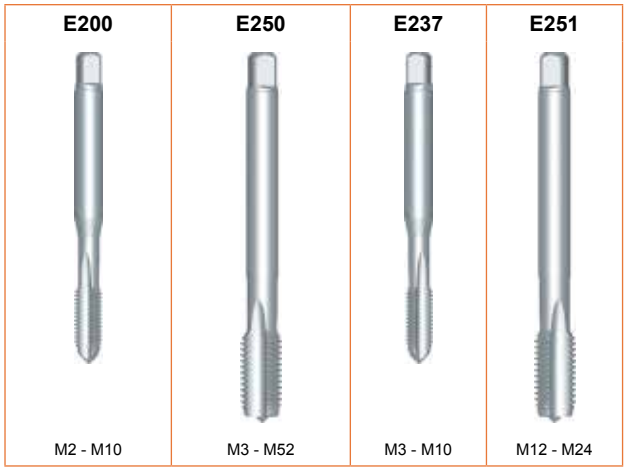

M	P mm	l_1 mm	l_2 mm	d_2 Ø mm	a mm	l_3 mm	z	↔	l_4 mm	E200	E250	E237	E251
2	0.40	45	6	2.8	2.1	5	3	1.6	9	E200M2			
2.5	0.45	50	8	2.8	2.1	5	3	2.05	12.5	E200M2.5			
3	0.50	56	10	2.2	2.1	5	3	2.5			E250M3		
3	0.50	56	9	3.5	2.7	6	3	2.5	18	E200M3		E237M3	
3	0.50	56	9	3.5	2.7	6	3	2.5	18	E200M3NO1			
4	0.70	63	12	2.8	2.1	5	3	3.3			E250M4		
4	0.70	63	12	4.5	3.4	6	3	3.3	21	E200M4		E237M4	
4	0.70	63	12	4.5	3.4	6	3	3.3	21	E200M4NO1			
5	0.80	70	13	3.5	2.7	6	3	4.2			E250M5		
5	0.80	70	13	6.0	4.9	8	3	4.2	25	E200M5		E237M5	
5	0.80	70	13	6.0	4.9	8	3	4.2	25	E200M5NO1			
6	1.00	80	15	4.5	3.4	6	3	5.0			E250M6		
6	1.00	80	15	6.0	4.9	8	3	5	30	E200M6		E237M6	
6	1.00	80	15	4.5	3.4	6	3	5.0			E250M6NO1		
6	1.00	80	15	6.0	4.9	8	3	5	30	E200M6NO1			
8	1.25	90	18	6.0	4.9	8	3	6.8			E250M8		
8	1.25	90	18	8.0	6.2	9	3	6.8	35	E200M8		E237M8	
8	1.25	90	18	6.0	4.9	8	3	6.8			E250M8NO1		
8	1.25	90	18	8.0	6.2	9	3	6.8	35	E200M8NO1			
10	1.50	100	20	10.0	8.0	11	3	8.5	39	E200M10		E237M10	
10	1.50	100	20	7.0	5.5	8	3	8.5			E250M10		
10	1.50	100	20	10.0	8.0	11	3	8.5	39	E200M10NO1			
12	1.75	110	23	9.0	7.0	10	3	10.3			E250M12		
12	1.75	110	23	9.0	7.0	10	4	10.3					E251M12

NO1 - NO9
219

M	P mm	l_1 mm	l_2 mm	d_2 Ø mm	a mm	l_3 mm	z	↔	l_4 mm	E200	E250	E237	E251
12	1.75	110	23	9.0	7.0	10	3	10.3			E250M12NO1		
14	2.00	110	25	11.0	9.0	12	3	12.0			E250M14		
14	2.00	110	25	11.0	9.0	12	4	12.0					E251M14
14	2.00	110	25	11.0	9.0	12	3	12.0			E250M14NO1		
16	2.00	110	25	12.0	9.0	12	3	14.0			E250M16		
16	2.00	110	25	12.0	9.0	12	4	14.0					E251M16
16	2.00	110	25	12.0	9.0	12	3	14.0			E250M16NO1		
18	2.50	125	30	14.0	11.0	14	3	15.5			E250M18		
18	2.50	125	30	14.0	11.0	14	4	15.5					E251M18
18	2.50	125	30	14.0	11.0	14	3	15.5			E250M18NO1		
20	2.50	140	30	16.0	12.0	15	3	17.5			E250M20		
20	2.50	140	30	16.0	12.0	15	4	17.5					E251M20
20	2.50	140	30	16.0	12.0	15	3	17.5			E250M20NO1		
22	2.50	140	34	18.0	14.5	17	4	19.5			E250M22		E251M22
22	2.50	140	34	18.0	14.5	17	4	19.5			E250M22NO1		
24	3.00	160	38	18.0	14.5	17	4	21.0			E250M24		E251M24
27	3.00	160	38	20.0	16.0	19	4	24.0			E250M27		
30	3.50	180	45	22.0	18.0	21	4	26.5			E250M30		
33	3.50	180	50	25.0	20.0	23	4	29.5			E250M33		
36	4.00	200	55	28.0	22.0	25	4	32.0			E250M36		
39	4.00	200	60	32.0	24.0	27	4	35.0			E250M39		
42	4.50	200	60	32.0	24.0	27	4	37.5			E250M42 [1]		
45	4.50	220	65	36.0	29.0	32	6	40.5			E250M45 [1]		
48	5.00	250	70	36.0	29.0	32	6	43.0			E250M48 [1]		
52	5.00	250	70	40.0	32.0	35	6	47.0			E250M52 [1]		

NO1 - NO9
219

[1] HSS-E

DORMER

E201
E252
E390

- M 机用直槽丝锥,白圈鲨鱼线丝锥
- M Macho Máquina Canal Reto , Shark - Anel Branco
- M Macho de máquina recto Shark (Anillo Blanco)
- M Machine Tap Straight Flute, White Shark

提供HSS-E,直到库存更新至HSS-E PM

Fornecido em HSS-E até disponibilidade do novo estoque

Suministrado en HSS-E hasta disponibilidad de nuevo stock

Supplied in HSS-E until new stock available

E201; E252; E390
▪ 3.1 3.2 3.3 8.2
• 3.4 6.2 6.4 7.4

E201	M	DIN 371	6HX		2XD	HSS-E PM	C 2-3			ST	
E252	M	DIN 376	6HX		2XD	HSS-E PM	C 2-3			ST	
E390	M	DIN 371≤10 376≥12	6HX		2XD	HSS-E PM	C 2-3			TiAlN	

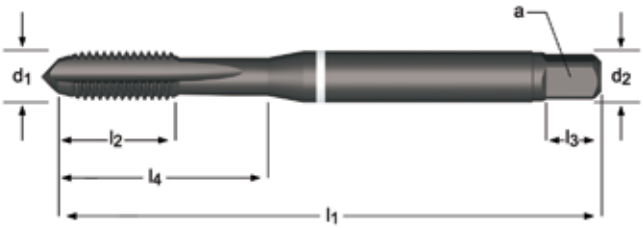

E201	E252	E390
		
SHARK LINE	SHARK LINE	SHARK LINE
M3 - M10	M8 - M24	M3 - M20

M	P mm	l_1 mm	l_2 mm	d_2 Ø mm	a mm	l_3 mm	z	↔	l_4 mm	E201	E252	E390
3	0.50	56	9	3.5	2.7	6	3	2.5	18	E201M3		E390M3
4	0.70	63	12	4.5	3.4	6	4	3.3	21	E201M4		E390M4
5	0.80	70	13	6.0	4.9	8	4	4.2	25	E201M5		E390M5
6	1.00	80	15	6.0	4.9	8	4	5.0	30	E201M6		E390M6
8	1.25	90	18	6.0	4.9	8	4	6.8			E252M8	
8	1.25	90	18	8.0	6.2	9	4	6.8	35	E201M8		E390M8
10	1.50	100	20	10.0	8.0	11	4	8.5	39	E201M10		E390M10
10	1.50	100	20	7.0	5.5	8	4	8.5			E252M10	
12	1.75	110	23	9.0	7.0	10	4	10.3			E252M12	E390M12
14	2.00	110	25	11.0	9.0	12	4	12.0			E252M14	
16	2.00	110	25	12.0	9.0	12	4	14.0			E252M16	E390M16
18	2.50	125	30	14.0	11.0	14	4	15.5			E252M18	
20	2.50	140	30	16.0	12.0	15	4	17.5			E252M20	E390M20
22	2.50	140	34	18.0	14.5	17	4	19.5			E252M22	
24	3.00	160	38	18.0	14.5	17	4	21.0			E252M24	

E500 E501 E504

- M 机用直槽丝锥
- M Macho Máquina Canal Reto
- M Machos de máquina Estrías rectas
- M Machine Tap Straight Flute

E500; E501	•	1.1 1.2 1.3 1.4 1.5 3.1 3.2 3.3 3.4 6.1 6.2 6.3 6.4 7.2 7.3 7.4 8.2 8.3
E504	▪	3.1 3.2 3.3
	•	1.1 1.2 1.3 1.4 1.5 3.4 6.2 6.3 6.4 7.2 7.3 7.4 8.2 8.3

E500	M	ISO 529	6H		1.5XD	HSS					
									L000 336	L115 335	L120 339
E501	M	ISO 529	6H		1.5XD	HSS					
E504	M	ISO 529	6H		1.5XD	HSS				TiN	

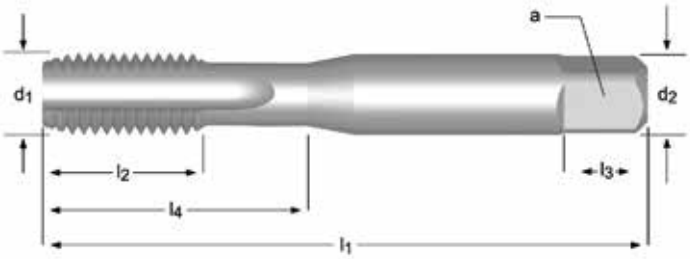

E500	E501	E504
		
M1 - M56	M3 - M24	M3 - M24

M	P mm	l_1 mm	l_2 mm	d_2 Ø mm	a mm	l_3 mm	z	↔	l_4 mm	E500	E501	E504
1	0.25	38	4.5	2.50	2.00	4	2	0.75	4.5	E500M1NO1 1)		
1	0.25	38	4.5	2.50	2.00	4	2	0.75	4.5	E500M1NO2 1)		
1	0.25	38	4.5	2.50	2.00	4	2	0.75	4.5	E500M1NO3 1)		
1.2	0.25	38	4.5	2.50	2.00	4	2	0.95	4.5	E500M1.2NO1 1)		
1.2	0.25	38	4.5	2.50	2.00	4	2	0.95	4.5	E500M1.2NO2 1)		
1.2	0.25	38	4.5	2.50	2.00	4	2	0.95	4.5	E500M1.2NO3 1)		
1.4	0.30	40	6	2.50	2.00	4	2	1.1	6	E500M1.4NO1 1)		
1.4	0.30	40	6	2.50	2.00	4	2	1.1	6	E500M1.4NO2 1)		
1.4	0.30	40	6	2.50	2.00	4	2	1.1	6	E500M1.4NO3 1)		
1.6	0.35	41	8	2.50	2.00	4	2	1.25	8	E500M1.6NO1		
1.6	0.35	41	8	2.50	2.00	4	2	1.25	8	E500M1.6NO2		
1.6	0.35	41	8	2.50	2.00	4	2	1.25	8	E500M1.6NO3	NO1 - NO9	
1.6	0.35	41	8	2.50	2.00	4	2	1.25	8	E500M1.6NO6	219	
1.7	0.35	41	8	2.50	2.00	4	2	1.35	8	E500M1.7NO1		
1.7	0.35	41	8	2.50	2.00	4	2	1.35	8	E500M1.7NO2		
1.7	0.35	41	8	2.50	2.00	4	2	1.35	8	E500M1.7NO3		
1.7	0.35	41	8	2.50	2.00	4	2	1.35	8	E500M1.7NO6		
1.7	0.35	41	8	2.50	2.00	4	2	1.35	8	E500M1.7NO8		

1) 5H

DORMER

M	P mm	l_1 mm	l_2 mm	d_2 Ø mm	◪ a mm	l_3 mm	z	↔	l_4 mm	E500	E501	E504
1.8	0.35	41	8	2.50	2.00	4	2	1.45	8	E500M1.8NO1		
1.8	0.35	41	8	2.50	2.00	4	2	1.45	8	E500M1.8NO2		
1.8	0.35	41	8	2.50	2.00	4	2	1.45	8	E500M1.8NO3		
2	0.40	41	8	2.50	2.00	4	3	1.6	8	E500M2NO1		
2	0.45	41	8	2.50	2.00	4	3	1.55	8	E500M2X.45NO1		
2	0.40	41	8	2.50	2.00	4	3	1.6	8	E500M2NO2		
2	0.45	41	8	2.50	2.00	4	3	1.55	8	E500M2X.45NO2		
2	0.40	41	8	2.50	2.00	4	3	1.6	8	E500M2NO3		
2	0.45	41	8	2.50	2.00	4	3	1.55	8	E500M2X.45NO3		
2	0.40	41	8	2.50	2.00	4	3	1.6	8	E500M2NO6		
2	0.40	41	8	2.50	2.00	4	3	1.6	8	E500M2NO8		
2.2	0.45	44.5	9.5	2.80	2.24	5	3	1.75	9.5	E500M2.2NO1		
2.2	0.45	44.5	9.5	2.80	2.24	5	3	1.75	9.5	E500M2.2NO2		
2.2	0.45	44.5	9.5	2.80	2.24	5	3	1.75	9.5	E500M2.2NO3		
2.3	0.45	44.5	9.5	2.80	2.24	5	3	1.85	9.5	E500M2.3NO1		
2.3	0.45	44.5	9.5	2.80	2.24	5	3	1.85	9.5	E500M2.3NO2		
2.3	0.45	44.5	9.5	2.80	2.24	5	3	1.85	9.5	E500M2.3NO3		
2.5	0.45	44.5	9.5	2.80	2.24	5	3	2.05	9.5	E500M2.5NO1		
2.5	0.45	44.5	9.5	2.80	2.24	5	3	2.05	9.5	E500M2.5NO2		
2.5	0.45	44.5	9.5	2.80	2.24	5	3	2.05	9.5	E500M2.5NO3		
2.5	0.45	44.5	9.5	2.80	2.24	5	3	2.05	9.5	E500M2.5NO6		
2.5	0.45	44.5	9.5	2.80	2.24	5	3	2.05	9.5	E500M2.5NO8	NO1 - NO9	
2.6	0.45	44.5	9.5	2.80	2.24	5	3	2.15	9.5	E500M2.6NO1		
2.6	0.45	44.5	9.5	2.80	2.24	5	3	2.15	9.5	E500M2.6NO2	219	
2.6	0.45	44.5	9.5	2.80	2.24	5	3	2.15	9.5	E500M2.6NO3		
3	0.50	48	12.5	3.15	2.50	5	3	2.5	12.5	E500M3NO1	E501M3NO1	
3	0.60	48	12.5	3.15	2.50	5	3	2.4	12.5	E500M3X.6NO1		
3	0.50	48	12.5	3.15	2.50	5	3	2.5	12.5	E500M3NO2	E501M3NO2	
3	0.60	48	12.5	3.15	2.50	5	3	2.4	12.5	E500M3X.6NO2		
3	0.50	48	12.5	3.15	2.50	5	3	2.5	12.5	E500M3NO3	E501M3NO3	E504M3NO3
3	0.60	48	12.5	3.15	2.50	5	3	2.4	12.5	E500M3X.6NO3		
3	0.50	48	12.5	3.15	2.50	5	3	2.5	12.5	E500M3NO6		
3	0.50	48	12.5	3.15	2.50	5	3	2.5	12.5	E500M3NO7		
3	0.50	48	12.5	3.15	2.50	5	3	2.5	12.5	E500M3NO8		
3.5	0.60	50	14	3.55	2.80	5	3	2.9	14	E500M3.5NO1		
3.5	0.60	50	14	3.55	2.80	5	3	2.9	14	E500M3.5NO2		
3.5	0.60	50	14	3.55	2.80	5	3	2.9	14	E500M3.5NO3		
3.5	0.60	50	14	3.55	2.80	5	3	2.9	14	E500M3.5NO6		
4	0.70	53	14	4.00	3.15	6	3	3.3	14	E500M4NO1	E501M4NO1	
4	0.75	53	14	4.00	3.15	6	3	3.25	14	E500M4X.75NO1		
4	0.70	53	14	4.00	3.15	6	3	3.3	14	E500M4NO2	E501M4NO2	
4	0.75	53	14	4.00	3.15	6	3	3.25	14	E500M4X.75NO2		
4	0.70	53	14	4.00	3.15	6	3	3.3	14	E500M4NO3	E501M4NO3	E504M4NO3
4	0.75	53	14	4.00	3.15	6	3	3.25	14	E500M4X.75NO3		
4	0.70	53	14	4.00	3.15	6	3	3.3	14	E500M4NO6		
4	0.70	53	14	4.00	3.15	6	3	3.3	14	E500M4NO7		
4	0.70	53	14	4.00	3.15	6	3	3.3	14	E500M4NO8		
4.5	0.75	53	9.5	4.50	3.55	6	3	3.8	18	E500M4.5NO1		
4.5	0.75	53	9.5	4.50	3.55	6	3	3.8	18	E500M4.5NO2		
4.5	0.75	53	9.5	4.50	3.55	6	3	3.8	18	E500M4.5NO3		
4.5	0.75	53	9.5	4.50	3.55	6	3	3.8	18	E500M4.5NO6		
5	0.80	58	11	5.00	4.00	7	3	4.2	22	E500M5NO1		
5	0.90	58	11	5.00	4.00	7	3	4.1	22	E500M5X.9NO1		
5	0.80	58	11	5.00	4.00	7	3	4.2	22	E500M5NO2	E501M5NO2	
5	0.90	58	11	5.00	4.00	7	3	4.1	22	E500M5X.9NO2		
5	0.80	58	11	5.00	4.00	7	3	4.2	22	E500M5NO3	E501M5NO3	E504M5NO3
5	0.90	58	11	5.00	4.00	7	3	4.1	22	E500M5X.9NO3		
5	0.80	58	11	5.00	4.00	7	3	4.2	22	E500M5NO6		
5	0.80	58	11	5.00	4.00	7	3	4.2	22	E500M5NO7		
5	0.80	58	11	5.00	4.00	7	3	4.2	22	E500M5NO8		
5.5	0.90	62	12	5.60	4.50	7	3	4.6	21	E500M5.5X.9NO1		
5.5	0.90	62	12	5.60	4.50	7	3	4.6	21	E500M5.5X.9NO2		
5.5	0.90	62	12	5.60	4.50	7	3	4.6	21	E500M5.5X.9NO3		
6	1.00	66	13	6.30	5.00	8	3	5	26	E500M6NO1	E501M6NO1	
6	1.00	66	13	6.30	5.00	8	3	5	26	E500M6NO2	E501M6NO2	
6	1.00	66	13	6.30	5.00	8	3	5	26	E500M6NO3	E501M6NO3	E504M6NO3
6	1.00	66	13	6.30	5.00	8	3	5	26	E500M6NO6		
6	1.00	66	13	6.30	5.00	8	3	5	26	E500M6NO7		
6	1.00	66	13	6.30	5.00	8	3	5	26	E500M6NO8		
7	1.00	66	13	7.10	5.60	8	3	6	26	E500M7NO1		

M	P mm	l_1 mm	l_2 mm	d_2 Ø mm	a mm	l_3 mm	z	↔	l_4 mm	E500	E501	E504
7	1.00	66	13	7.10	5.60	8	3	6	26	E500M7NO2		
7	1.00	66	13	7.10	5.60	8	3	6	26	E500M7NO3		
7	1.00	66	13	7.10	5.60	8	3	6	26	E500M7NO6		
8	1.25	72	16	8.00	6.30	9	3	6.8	29	E500M8NO1	E501M8NO1	
8	1.25	72	16	8.00	6.30	9	3	6.8	29	E500M8NO2	E501M8NO2	
8	1.25	72	16	8.00	6.30	9	3	6.8	29	E500M8NO3	E501M8NO3	E504M8NO3
8	1.25	72	16	8.00	6.30	9	3	6.8	29	E500M8NO6		
8	1.25	72	16	8.00	6.30	9	3	6.8	29	E500M8NO7		
8	1.25	72	16	8.00	6.30	9	3	6.8	29	E500M8NO8		
9	1.25	72	16	9.00	7.10	10	3	7.8	29	E500M9NO1		
9	1.25	72	16	9.00	7.10	10	3	7.8	29	E500M9NO2		
9	1.25	72	16	9.00	7.10	10	3	7.8	29	E500M9NO3		
9	1.25	72	16	9.00	7.10	10	3	7.8	29	E500M9NO6		
10	1.50	80	18	10.00	8.00	11	3	8.5	34	E500M10NO1	E501M10NO1	
10	1.50	80	18	10.00	8.00	11	3	8.5	34	E500M10NO2	E501M10NO2	
10	1.50	80	18	10.00	8.00	11	3	8.5	34	E500M10NO3	E501M10NO3	E504M10NO3
10	1.50	80	18	10.00	8.00	11	3	8.5	34	E500M10NO6		
10	1.50	80	18	10.00	8.00	11	3	8.5	34	E500M10NO7		
10	1.50	80	18	10.00	8.00	11	3	8.5	34	E500M10NO8	NO1 - NO9	
11	1.50	85	19	8.00	6.30	9	3	9.5	-	E500M11NO1		
11	1.50	85	19	8.00	6.30	9	3	9.5	-	E500M11NO2	219	
11	1.50	85	19	8.00	6.30	9	3	9.5	-	E500M11NO3		
11	1.50	85	19	8.00	6.30	9	3	9.5	-	E500M11NO6		
12	1.75	89	22	9.00	7.10	10	3	10.3	-	E500M12NO1	E501M12NO1	
12	1.75	89	22	9.00	7.10	10	3	10.3	-	E500M12NO2	E501M12NO2	
12	1.75	89	22	9.00	7.10	10	3	10.3	-	E500M12NO3	E501M12NO3	
12	1.75	89	22	9.00	7.10	10	3	10.3	-	E500M12NO6		
12	1.75	89	22	9.00	7.10	10	3	10.3	-	E500M12NO7		
12	1.75	89	22	9.00	7.10	10	3	10.3	-	E500M12NO8		
14	2.00	95	24	11.20	9.00	12	4	12	-	E500M14NO1	E501M14NO1	
14	2.00	95	24	11.20	9.00	12	4	12	-	E500M14NO2	E501M14NO2	
14	2.00	95	24	11.20	9.00	12	4	12	-	E500M14NO3	E501M14NO3	
14	2.00	95	24	11.20	9.00	12	4	12	-	E500M14NO6		
14	2.00	95	24	11.20	9.00	12	4	12	-	E500M14NO7		
14	2.00	95	24	11.20	9.00	12	4	12	-	E500M14NO8		
16	2.00	102	24	12.50	10.00	13	4	14	-	E500M16NO1	E501M16NO1	
16	2.00	102	24	12.50	10.00	13	4	14	-	E500M16NO2	E501M16NO2	
16	2.00	102	24	12.50	10.00	13	4	14	-	E500M16NO3	E501M16NO3	
16	2.00	102	24	12.50	10.00	13	4	14	-	E500M16NO6		
16	2.00	102	24	12.50	10.00	13	4	14	-	E500M16NO7		
16	2.00	102	24	12.50	10.00	13	4	14	-	E500M16NO8		
18	2.50	112	29	14.00	11.20	14	4	15.5	-	E500M18NO1		
18	2.50	112	29	14.00	11.20	14	4	15.5	-	E500M18NO2		
18	2.50	112	29	14.00	11.20	14	4	15.5	-	E500M18NO3	E501M18NO3	
18	2.50	112	29	14.00	11.20	14	4	15.5	-	E500M18NO6		
20	2.50	112	29	14.00	11.20	14	4	17.5	-	E500M20NO1	E501M20NO1	
20	2.50	112	29	14.00	11.20	14	4	17.5	-	E500M20NO2	E501M20NO2	
20	2.50	112	29	14.00	11.20	14	4	17.5	-	E500M20NO3	E501M20NO3	
20	2.50	112	29	14.00	11.20	14	4	17.5	-	E500M20NO6		
20	2.50	112	29	14.00	11.20	14	4	17.5	-	E500M20NO7		
20	2.50	112	29	14.00	11.20	14	4	17.5	-	E500M20NO8		
22	2.50	118	29	16.00	12.50	16	4	19.5	-	E500M22NO1		
22	2.50	118	29	16.00	12.50	16	4	19.5	-	E500M22NO2		
22	2.50	118	29	16.00	12.50	16	4	19.5	-	E500M22NO3	E501M22NO3	
22	2.50	118	29	16.00	12.50	16	4	19.5	-	E500M22NO6		
24	3.00	130	35	18.00	14.00	18	4	21	-	E500M24NO1		
24	3.00	130	35	18.00	14.00	18	4	21	-	E500M24NO2	E501M24NO2	
24	3.00	130	35	18.00	14.00	18	4	21	-	E500M24NO3	E501M24NO3	
24	3.00	130	35	18.00	14.00	18	4	21	-	E500M24NO6		
24	3.00	130	35	18.00	14.00	18	4	21	-	E500M24NO7		
27	3.00	135	35	20.00	16.00	20	4	24	-	E500M27NO1		
27	3.00	135	35	20.00	16.00	20	4	24	-	E500M27NO2		
27	3.00	135	35	20.00	16.00	20	4	24	-	E500M27NO3		
30	3.50	138	41	20.00	16.00	20	4	26.5	-	E500M30NO1		
30	3.50	138	41	20.00	16.00	20	4	26.5	-	E500M30NO2		
30	3.50	138	41	20.00	16.00	20	4	26.5	-	E500M30NO3		
33	3.50	151	41	22.40	18.00	22	4	29.5	-	E500M33NO1		
33	3.50	151	41	22.40	18.00	22	4	29.5	-	E500M33NO2		
33	3.50	151	41	22.40	18.00	22	4	29.5	-	E500M33NO3		
36	4.00	162	47	25.00	20.00	24	4	32	-	E500M36NO1		

M	P mm	l_1 mm	l_2 mm	d_2 Ø mm	◪ a mm	l_3 mm	z	↔	l_4 mm	E500	E501	E504
36	4.00	162	47	25.00	20.00	24	4	32	-	E500M36NO2		
36	4.00	162	47	25.00	20.00	24	4	32	-	E500M36NO3		
39	4.00	170	47	28.00	22.40	26	4	35	-	E500M39NO1		
39	4.00	170	47	28.00	22.40	26	4	35	-	E500M39NO2		
39	4.00	170	47	28.00	22.40	26	4	35	-	E500M39NO3		
42	4.50	170	53	28.00	22.40	26	6	37.5	-	E500M42NO1		
42	4.50	170	53	28.00	22.40	26	6	37.5	-	E500M42NO2		
42	4.50	170	53	28.00	22.40	26	6	37.5	-	E500M42NO3		
45	4.50	187	54	31.50	25.00	28	6	40.5	-	E500M45NO1		
45	4.50	187	54	31.50	25.00	28	6	40.5	-	E500M45NO2		
45	4.50	187	54	31.50	25.00	28	6	40.5	-	E500M45NO3		
48	5.00	187	60	31.50	25.00	28	6	43	-	E500M48NO1		
48	5.00	187	60	31.50	25.00	28	6	43	-	E500M48NO2		
48	5.00	187	60	31.50	25.00	28	6	43	-	E500M48NO3		
52	5.00	200	60	35.50	28.00	31	6	47	-	E500M52NO3		
56	5.50	200	60	35.50	28.00	31	6	50.5	-	E500M56NO3		

E303

- M 机用直槽丝锥
- M Macho Máquina Canal Reto
- M Machos de máquina Estrías rectas
- M Machine Tap Straight Flute

E303 • 1.1 1.2 1.3 1.4 1.5 3.1 3.2 3.3 6.2 6.3 7.2 7.3 8.2

E303 M | DIN 357 | 6H | 2XD | HSS-E | D18-20 C 2-3

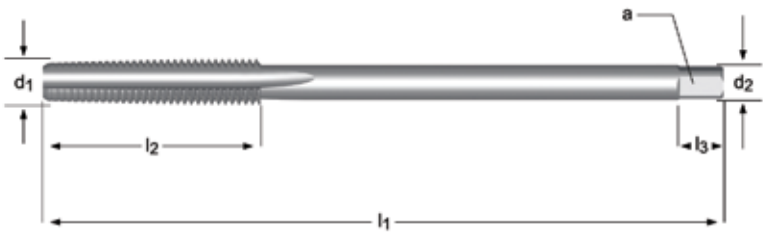

E303

M3 - M20

M	P mm	l_1 mm	l_2 mm	d_2 Ø mm	a mm	l_3 mm	z		E303
3	0.50	70	22	2.2	2.1	5	3	2.5	E303M3NO1
3	0.50	70	22	2.2	2.1	5	3	2.5	E303M3NO3
4	0.70	90	25	2.8	2.1	5	3	3.3	E303M4NO1
4	0.70	90	25	2.8	2.1	5	3	3.3	E303M4NO3
5	0.80	100	28	3.5	2.7	6	3	4.2	E303M5NO1
5	0.80	100	28	3.5	2.7	6	3	4.2	E303M5NO3
6	1.00	110	32	4.5	3.4	6	3	5.0	E303M6NO1
6	1.00	110	32	4.5	3.4	6	3	5.0	E303M6NO3
8	1.25	125	40	6.0	4.9	8	3	6.8	E303M8NO1
8	1.25	125	40	6.0	4.9	8	3	6.8	E303M8NO3
10	1.50	140	45	7.0	5.5	8	3	8.5	E303M10NO1
10	1.50	140	45	7.0	5.5	8	3	8.5	E303M10NO3
12	1.75	180	50	9.0	7.0	10	3	10.3	E303M12NO1
12	1.75	180	50	9.0	7.0	10	3	10.3	E303M12NO3
14	2.00	200	56	11.0	9.0	12	3	12.0	E303M14NO1
14	2.00	200	56	11.0	9.0	12	3	12.0	E303M14NO3
16	2.00	200	63	12.0	9.0	12	3	14.0	E303M16NO1
16	2.00	200	63	12.0	9.0	12	3	14.0	E303M16NO3
20	2.50	250	70	16.0	12.0	15	3	17.5	E303M20NO1
20	2.50	250	70	16.0	12.0	15	3	17.5	E303M20NO3

NO1 - NO9
219

E600
E610

- M 超长机用直槽丝锥
- M Macho Máquina Extra Longo Canal Reto
- M Machos de máquina Extra largo Estrías rectas
- M Machine Tap, Extra Long Straight Flute

提供HSS-E,直到库存更新至HSS-E PM
Fornecido em HSS-E até disponibilidade do novo estoque
Suministrado en HSS-E hasta disponibilidad de nuevo stock
Supplied in HSS-E until new stock available

E600	•	1.1 1.2 1.3 1.4 1.5 3.1 3.2 3.3 3.4 6.1 6.2 6.3 6.4 7.2 7.3 7.4 8.2 8.3
E610	▪	3.1 3.2 3.3
	•	1.1 1.2 1.3 1.4 1.5 3.4 6.2 6.3 6.4 7.2 7.3 7.4 8.2 8.3

E600	M	ISO 2283	6H		1.5XD	HSS-E PM	C 2-3				
E610	M	ISO 2283	6H		1.5XD	HSS-E PM	C 2-3			TiN	

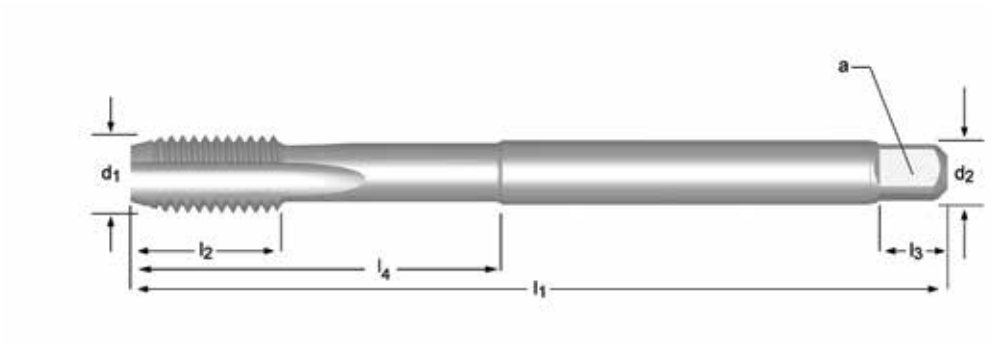

E600	E610
	
M3 - M30	M3 - M16

M	P mm	l_1 mm	l_2 mm	d_2 Ø mm	a mm	l_3 mm	z	↔	l_4 mm	E600	E610
3	0.50	66	9	3.15	2.50	5	3	2.5	18	E600M3NO3	E610M3NO3
4	0.70	73	12	3.15	2.50	5	3	3.3	-	E600M4NO1	
4	0.70	73	12	3.15	2.50	5	3	3.3	-	E600M4NO2	
4	0.70	73	12	3.15	2.50	5	3	3.3	-	E600M4NO3	E610M4NO3
5	0.80	79	12	4.00	3.15	6	3	4.2	-	E600M5NO1	
5	0.80	79	12	4.00	3.15	6	3	4.2	-	E600M5NO2	
5	0.80	79	12	4.00	3.15	6	3	4.2	-	E600M5NO3	E610M5NO3
6	1.00	89	14	4.50	3.55	6	3	5	-	E600M6NO1	
6	1.00	89	14	4.50	3.55	6	3	5	-	E600M6NO2	
6	1.00	89	14	4.50	3.55	6	3	5	-	E600M6NO3	E610M6NO3
8	1.25	97	17	6.30	5.00	8	3	6.8	-	E600M8NO1	
8	1.25	97	17	6.30	5.00	8	3	6.8	-	E600M8NO2	
8	1.25	97	17	6.30	5.00	8	3	6.8	-	E600M8NO3	E610M8NO3
10	1.50	108	19	8.00	6.30	9	3	8.5	-	E600M10NO1	
10	1.50	108	19	8.00	6.30	9	3	8.5	-	E600M10NO2	
10	1.50	108	19	8.00	6.30	9	3	8.5	-	E600M10NO3	E610M10NO3
12	1.75	119	23	9.00	7.10	10	3	10.3	-	E600M12NO1	
12	1.75	119	23	9.00	7.10	10	3	10.3	-	E600M12NO2	
12	1.75	119	23	9.00	7.10	10	3	10.3	-	E600M12NO3	E610M12NO3
16	2.00	137	25	12.50	10.0	13	4	14	-	E600M16NO3	E610M16NO3
20	2.50	149	30	14.00	11.2	14	4	17.5	-	E600M20NO3	

NO1 - NO9
219

EP006H
EP006G
EP00TiN
EP016H

- M 机用螺尖丝锥
- M Macho Máquina Ponta Helicoidal
- M Machos de máquina Entrada en hélice
- M Machine Tap Spiral Point

提供HSS-E,直到库存更新至HSS-E PM

Fornecido em HSS-E até disponibilidade do novo estoque

Suministrado en HSS-E hasta disponibilidad de nuevo stock

Supplied in HSS-E until new stock available

EP006H; EP006G	▪	1.1 1.2 1.3 1.4 1.5 6.1 6.3 7.1 7.2 7.3 7.4
	•	1.6 3.1 3.2 3.3 3.4 4.1 4.2 5.1 5.2 6.2 8.1
EP00TIN	▪	1.1 1.2 1.3 1.4 1.5 2.1 2.2 6.1 6.3 7.3 7.4
	•	1.6 2.3 3.1 3.2 3.3 3.4 4.1 4.2 5.1 5.2 6.2 8.2
EP016H	▪	1.1 1.2 1.3 1.4 1.5
	•	1.6 2.1 2.2 2.3 3.1 3.2 3.3 3.4

EP006H	M	DIN 371≤10 376≥12	6H		2.5XD	HSS-E PM	B 3.5-5				L001 337 / L114 334
EP006G	M	DIN 371≤10 376≥12	6G		2.5XD	HSS-E PM	B 3.5-5				
EP00TIN	M	DIN 371≤10 376≥12	6H		2.5XD	HSS-E PM	B 3.5-5			TiN	
EP016H	M	DIN 371≤10 376≥12	6H		2.5XD	HSS-E PM	B 3.5-5			ST	

EP006H	EP006G	EP00TIN	EP016H
			
M2 - M30	M3 - M20	M3 - M30	M2 - M30

M	P mm	l_1 mm	l_2 mm	d_2 Ø mm	◪ a mm	l_3 mm	z	↔	l_4 mm	EP006H	EP006G	EP00TIN	EP016H
2	0.40	50	6	2.8	2.1	5	2	1.6	9	EP00M2			EP01M2
2.5	0.45	50	8	2.8	2.1	5	2	2.1	12.5	EP00M2.5			EP01M2.5
3	0.50	56	10	2.2	1.8	4	3	2.5	18	EP00M3DIN376			EP01M3DIN376
3	0.50	56	9	3.5	2.7	6	3	2.5	18	EP00M3	EP006GM3	EP00TINM3	EP01M3
3.5	0.60	56	11	4.0	3.0	6	3	2.9	20	EP00M3.5			EP01M3.5
4	0.70	63	12	2.8	2.1	5	3	3.3	21	EP00M4DIN376			EP01M4DIN376
4	0.70	63	12	4.5	3.4	6	3	3.3	21	EP00M4	EP006GM4	EP00TINM4	EP01M4
4.5	0.75	70	13	6.0	4.9	8	3	3.8	25	EP00M4.5			EP01M4.5
5	0.80	70	13	3.5	2.7	6	3	4.2	25	EP00M5DIN376			EP01M5DIN376
5	0.80	70	13	6.0	4.9	8	3	4.2	25	EP00M5	EP006GM5	EP00TINM5	EP01M5
6	1.00	80	15	4.5	3.4	6	3	5	30	EP00M6DIN376			EP01M6DIN376
6	1.00	80	15	6.0	4.9	8	3	5	30	EP00M6	EP006GM6	EP00TINM6	EP01M6
7	1.00	80	15	7.0	5.5	8	3	6	30	EP00M7			EP01M7
8	1.25	90	18	6.0	4.9	8	3	6.8	35	EP00M8DIN376			EP01M8DIN376
8	1.25	90	18	8.0	6.2	9	3	6.8	35	EP00M8	EP006GM8	EP00TINM8	EP01M8
10	1.50	100	20	10.0	8.0	11	3	8.5	39	EP00M10	EP006GM10	EP00TINM10	EP01M10

M	P mm	l_1 mm	l_2 mm	d_2 Ø mm	⧄ a mm	l_3 mm	z	↔	l_4 mm	EP006H	EP006G	EP00TIN	EP016H
10	1.50	100	20	7.0	5.5	8	3	8.5	-	EP00M10DIN376			EP01M10DIN376
12	1.75	110	23	9.0	7.0	10	3	10.3	-	EP00M12	EP006GM12	EP00TINM12	EP01M12
14	2.00	110	25	11.0	9.0	12	3	12	-	EP00M14		EP00TINM14	EP01M14
16	2.00	110	25	12.0	9.0	12	3	14	-	EP00M16	EP006GM16	EP00TINM16	EP01M16
18	2.50	125	30	14.0	11.0	14	4	15.5	-	EP00M18		EP00TINM18	EP01M18
20	2.50	140	30	16.0	12.0	15	4	17.5	-	EP00M20	EP006GM20	EP00TINM20	EP01M20
22	2.50	140	34	18.0	14.5	17	4	19.5	-	EP00M22		EP00TINM22	EP01M22
24	3.00	160	38	18.0	14.5	17	4	21	-	EP00M24		EP00TINM24	EP01M24
27	3.00	160	38	20.0	16.0	19	4	24	-	EP00M27		EP00TINM27	EP01M27
30	3.50	180	45	22.0	18.0	21	4	26.5	-	EP00M30		EP00TINM30	EP01M30

E297

- M 机用螺尖丝锥，黄圈鲨鱼丝锥
- M Macho Máquina Ponta Helicoidal , Shark - Anel Amarelo
- M Macho de máquina con entrada en hélice Shark (Anillo Amarillo)
- M Machine Tap Spiral Point, Yellow Shark

E297						
	▪	1.1	1.2	1.3	6.1	6.3
	•	1.4	1.5	6.2		

E297 M | DIN 371≤10 376≥12 | 6H | 2.5XD | HSS-E PM | B 3.5-5 | Cr | L114 334

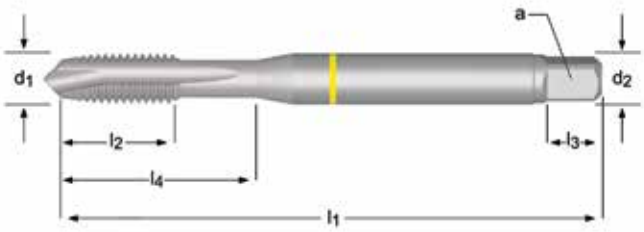

E297

M3 - M30

M	P mm	l_1 mm	l_2 mm	d_2 Ø mm	a mm	l_3 mm	z	↔	l_4 mm	E297
3	0.50	56	9	3.5	2.7	6	3	2.5	18	E297M3
4	0.70	63	12	4.5	3.4	6	3	3.3	21	E297M4
5	0.80	70	13	6.0	4.9	8	3	4.2	25	E297M5
6	1.00	80	15	6.0	4.9	8	3	5.0	30	E297M6
8	1.25	90	18	8.0	6.2	9	3	6.8	35	E297M8
10	1.50	100	20	10.0	8.0	11	3	8.5	39	E297M10
12	1.75	110	23	9.0	7.0	10	3	10.3	-	E297M12
14	2.00	110	25	11.0	9.0	12	3	12.0	-	E297M14
16	2.00	110	25	12.0	9.0	12	3	14.0	-	E297M16
18	2.50	125	30	14.0	11.0	14	3	15.5	-	E297M18
20	2.50	140	30	16.0	12.0	15	3	17.5	-	E297M20
22	2.50	140	34	18.0	14.5	17	4	19.5	-	E297M22
24	3.00	160	38	18.0	14.5	17	4	21.0	-	E297M24
27	3.00	160	38	20.0	16.0	19	4	24.0	-	E297M27
30	3.50	180	45	22.0	18.0	21	4	26.5	-	E297M30

DORMER

E255
E256

- M 机用螺尖丝锥，红圈鲨鱼丝锥
- M Macho Máquina Ponta Helicoidal , Shark - Anel Vermelho
- M Macho de máquina con entrada en hélice Shark (Anillo Rojo)
- M Machine Tap Spiral Point, Red Shark

提供HSS-E,直到库存更新至HSS-E PM
Fornecido em HSS-E até disponibilidade do novo estoque
Suministrado en HSS-E hasta disponibilidad de nuevo stock
Supplied in HSS-E until new stock available

E255	▪	1.4
	•	1.5 1.6 4.2 5.2
E256	▪	1.4 1.5
	•	1.6 4.2 5.2

E255	M	DIN 371≤10 376≥12	6H		2.5XD	HSS-E PM	B 3.5-5				
E256	M	DIN 371≤10 376≥12	6H		2.5XD	HSS-E PM	B 3.5-5			TiAlN Top	

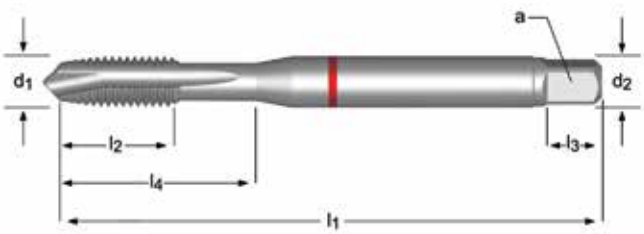

E255	E256
	
M3 - M20	M3 - M20

M	P mm	l_1 mm	l_2 mm	d_2 Ø mm	a mm	l_3 mm	z	↔	l_4 mm	E255	E256
3	0.50	56	9	3.5	2.7	6	3	2.5	18	E255M3	E256M3
4	0.70	63	12	4.5	3.4	6	3	3.3	21	E255M4	E256M4
5	0.80	70	13	6.0	4.9	8	3	4.2	25	E255M5	E256M5
6	1.00	80	15	6.0	4.9	8	3	5.0	30	E255M6	E256M6
8	1.25	90	18	8.0	6.2	9	3	6.8	35	E255M8	E256M8
10	1.50	100	20	10.0	8.0	11	3	8.5	39	E255M10	E256M10
12	1.75	110	23	9.0	7.0	10	3	10.3	-	E255M12	E256M12
14	2.00	110	25	11.0	9.0	12	3	12.0	-	E255M14	
16	2.00	110	25	12.0	9.0	12	3	14.0	-	E255M16	E256M16
20	2.50	140	30	16.0	12.0	15	4	17.5	-	E255M20	E256M20

E240
E241

- M 机用螺尖丝锥，蓝圈鲨鱼丝锥
- M Macho Máquina Ponta Helicoidal Shark - Anel Azul
- M Macho de máquina con entrada en hélice Shark (Anillo Azul)
- M Machine Tap Spiral Point, Blue Shark

E240	▪	2.1 2.2 2.3
	•	1.5
E241	▪	2.1 2.2 2.3
	•	1.2 1.3 1.4 1.5

E240	M	DIN 371≤10 376≥12	6H		2.5XD	HSS-E PM	B 3.5-5			ST	L114 334
E241	M	DIN 371≤10 376≥12	6H		2.5XD	HSS-E PM	B 3.5-5			Super B	

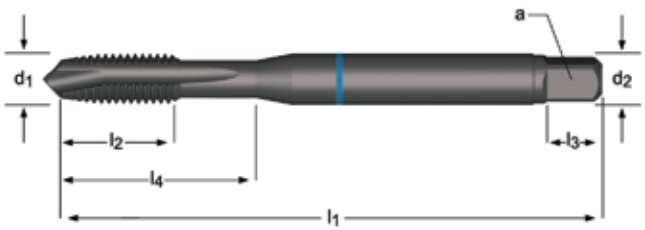

E240	E241
	
M3 - M30	M3 - M20

M	P mm	l_1 mm	l_2 mm	d_2 Ø mm	a mm	l_3 mm	z	↔	l_4 mm	E240	E241
3	0.50	56	9	3.5	2.7	6	3	2.5	18	E240M3	E241M3
4	0.70	63	12	4.5	3.4	6	3	3.3	21	E240M4	E241M4
5	0.80	70	13	6.0	4.9	8	3	4.2	25	E240M5	E241M5
6	1.00	80	15	6.0	4.9	8	3	5.0	30	E240M6	E241M6
8	1.25	90	18	8.0	6.2	9	3	6.8	35	E240M8	E241M8
10	1.50	100	20	10.0	8.0	11	3	8.5	39	E240M10	E241M10
12	1.75	110	23	9.0	7.0	10	4	10.3	-	E240M12	E241M12
14	2.00	110	25	11.0	9.0	12	4	12.0	-	E240M14	E241M14
16	2.00	110	25	12.0	9.0	12	4	14.0	-	E240M16	E241M16
18	2.50	125	30	14.0	11.0	14	4	15.5	-	E240M18	E241M18
20	2.50	140	30	16.0	12.0	15	4	17.5	-	E240M20	E241M20
22	2.50	140	34	18.0	14.5	17	4	19.5	-	E240M22	
24	3.00	160	38	18.0	14.5	17	4	21.0	-	E240M24	
27	3.00	160	38	20.0	16.0	19	4	24.0	-	E240M27	
30	3.50	180	45	22.0	18.0	21	4	26.5	-	E240M30	

DORMER

E471
E472

- M 绿圈机用螺尖丝锥,绿圈鲨鱼线丝锥
- M Macho Máquina Ponta Helicoidal , Shark - Anel Verde
- M Macho de máquina con entrada en hélice Shark (Anillo Verde)
- M Machine Tap Spiral Point, Green Shark

提供HSS-E,直到库存更新至HSS-E PM
Fornecido em HSS-E até disponibilidade do novo estoque
Suministrado en HSS-E hasta disponibilidad de nuevo stock
Supplied in HSS-E until new stock available

E471	▪	6.2 6.3 7.1 7.2 7.3 8.1
	•	1.1 1.2 1.3 6.1 7.4
E472	▪	6.2 7.2 7.3 7.4
	•	1.2 1.3 6.3 7.1 8.1

E471	M	DIN 371≤10 376≥12	6H		2.5XD	HSS-E PM	B 3.5-5				
E472	M	DIN 371≤10 376≥12	6H		2.5XD	HSS-E PM	B 3.5-5			Super B	

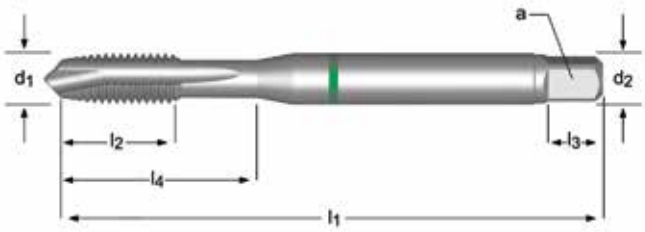

E471	E472
	
M3 - M20	M3 - M20

M	P mm	l_1 mm	l_2 mm	d_2 Ø mm	a mm	l_3 mm	z	↔	l_4 mm	E471	E472
3	0.50	56	9	3.5	2.7	6	2	2.5	18	E471M3	E472M3
4	0.70	63	12	4.5	3.4	6	2	3.3	21	E471M4	E472M4
5	0.80	70	13	6.0	4.9	8	2	4.2	25	E471M5	E472M5
6	1.00	80	15	6.0	4.9	8	3	5.0	30	E471M6	E472M6
8	1.25	90	18	8.0	6.2	9	3	6.8	35	E471M8	E472M8
10	1.50	100	20	10.0	8.0	11	3	8.5	39	E471M10	E472M10
12	1.75	110	23	9.0	7.0	10	3	10.3	-	E471M12	E472M12
16	2.00	110	25	12.0	9.0	12	4	14.0	-	E471M16	E472M16
20	2.50	140	30	16.0	12.0	15	4	17.5	-	E471M20	E472M20

E000
E000TIN
E001

- M 机用螺尖 丝锥
- M Macho Máquina Ponta Helicoidal
- M Machos de máquina Entrada en hélice
- M Machine Tap Spiral Point

提供HSS-E,直到库存更新至HSS-E PM

Fornecido em HSS-E até disponibilidade do novo estoque

Suministrado en HSS-E hasta disponibilidad de nuevo stock

Supplied in HSS-E until new stock available

E000	▪	1.1 1.2 1.3 1.4 1.5 6.1 6.3 7.1 7.2 7.3 7.4
	•	1.6 3.1 3.2 3.3 3.4 4.1 4.2 5.1 5.2 6.2 8.1
E000TIN	▪	1.1 1.2 1.3 1.4 1.5 2.1 2.2 6.1 6.3 7.3 7.4
	•	1.6 2.3 3.1 3.2 3.3 3.4 4.1 4.2 5.1 5.2 6.2 8.2
E001	▪	1.1 1.2 1.3 1.4 1.5
	•	1.6 2.1 2.2 2.3 3.1 3.2 3.3 3.4

E000	M	ISO 529	6H		2.5XD	HSS-E PM	B 3.5-5				L002 338	L113 333
E000TIN	M	ISO 529	6H		2.5XD	HSS-E PM	B 3.5-5			TiN		
E001	M	ISO 529	6H		2.5XD	HSS-E PM	B 3.5-5			ST		L113 333

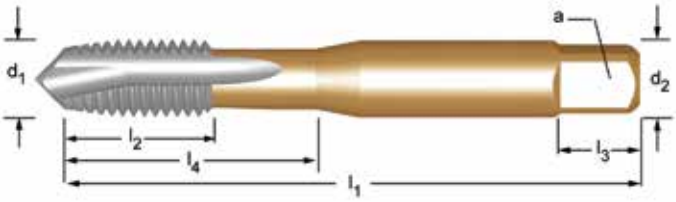

E000	E000TIN	E001
		
M1.6 - M24	M3 - M20	M1.6 - M24

M	P mm	l_1 mm	l_2 mm	d_2 Ø mm	⧄ a mm	l_3 mm	z	↔	l_4 mm	E000	E000TIN	E001
1.6	0.35	41	7	2.50	2.00	4	2	1.25	7	E000M1.6		E001M1.6
2	0.40	41	8	2.50	2.00	4	2	1.6	8	E000M2		E001M2
2.5	0.45	44.5	9.5	2.80	2.24	5	2	2.05	9.5	E000M2.5		E001M2.5
3	0.50	48	15	3.15	2.50	5	3	2.5	15	E000M3	E000TINM3	E001M3
3.5	0.60	50	16	3.55	2.80	5	3	2.9	16	E000M3.5		E001M3.5
4	0.70	53	17	4.00	3.15	6	3	3.3	17	E000M4	E000TINM4	E001M4
5	0.80	58	11	5.00	4.00	7	3	4.2	22	E000M5	E000TINM5	E001M5
6	1.00	66	13	6.30	5.00	8	3	5.0	26	E000M6	E000TINM6	E001M6
8	1.25	72	16	8.00	6.30	9	3	6.8	29	E000M8	E000TINM8	E001M8
10	1.50	80	18	10.00	8.00	11	3	8.5	34	E000M10	E000TINM10	E001M10
12	1.75	89	22	9.00	7.10	10	3	10.3	-	E000M12	E000TINM12	E001M12
14	2.00	95	24	11.20	9.00	12	3	12.0	-	E000M14		E001M14
16	2.00	102	24	12.50	10.00	13	3	14.0	-	E000M16	E000TINM16	E001M16
18	2.50	112	29	14.00	11.20	14	4	15.5	-	E000M18		E001M18
20	2.50	112	29	14.00	11.20	14	4	17.5	-	E000M20	E000TINM20	E001M20
22	2.50	118	29	16.00	12.50	16	4	19.5	-	E000M22		E001M22
24	3.00	130	35	18.00	14.00	18	4	21.0	-	E000M24		E001M24

E606

- M 超长机用螺尖丝锥
- M Macho Máquina Extra Longo Ponta Helicoidal
- M Machos de máquina Extra largo Entrada en hélice
- M Machine Tap, Extra Long Spiral Point

提供HSS-E,直到库存更新至HSS-E PM
Fornecido em HSS-E até disponibilidade do novo estoque
Suministrado en HSS-E hasta disponibilidad de nuevo stock
Supplied in HSS-E until new stock available

E606	•	1.1	1.2	1.3	1.4	1.5	1.6	2.1	2.2	2.3	4.3	5.1	5.2	6.1	6.3	7.1	7.2	7.3	7.4	8.1

E606 M ISO 2283 6H 2.5XD HSS-E PM B 3.5-5

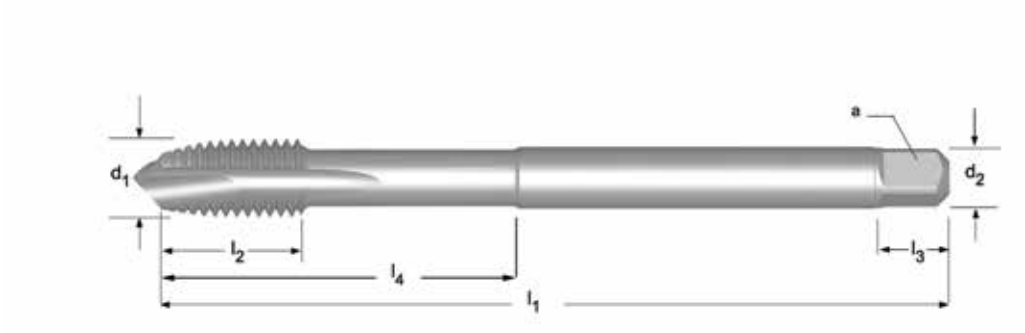

E606

M3 - M24

M	P mm	l_1 mm	l_2 mm	d_2 Ø mm	a mm	l_3 mm	z		l_4 mm	E606
3	0.50	66	9	3.15	2.50	5	3	2.5	18	E606M3
4	0.70	73	12	3.15	2.50	5	3	3.3	-	E606M4
5	0.80	79	12	4.00	3.15	6	3	4.2	-	E606M5
6	1.00	89	14	4.50	3.55	6	3	5	-	E606M6
8	1.25	97	17	6.30	5.00	8	3	6.8	-	E606M8
10	1.50	108	19	8.00	6.30	9	3	8.5	-	E606M10
12	1.75	119	23	9.00	7.10	10	3	10.3	-	E606M12
14	2.00	127	25	11.20	9.00	12	3	12	-	E606M14
16	2.00	137	25	12.50	10.00	13	3	14	-	E606M16
20	2.50	149	30	14.00	11.20	14	4	17.5	-	E606M20
24	3.00	172	36	18.00	14.00	18	4	21	-	E606M24

E216
E266
E422
E423

- M 机用跳牙螺尖
- M Macho Máquina, Rosca Interrompida Ponta Helicoidal
- M Machos de máquina, dientes alternos Entrada en hélice
- M Machine Tap, Interrupted Threads Spiral Point

提供HSS-E,直到库存更新至HSS-E PM

Fornecido em HSS-E até disponibilidade do novo estoque

Suministrado en HSS-E hasta disponibilidad de nuevo stock

Supplied in HSS-E until new stock available

E216; E266; E422; E423

- ▪ 1.2 1.3 1.4
- • 1.1 1.5 3.1 3.2 3.3 3.4 4.1 4.3 5.1 5.2 6.1 6.2 6.3 7.1 7.2 7.3 7.4 8.1

E216	M	DIN 371	6H		3XD	HSS-E PM	B 3.5-5				
E266	M	DIN 376	6H		3XD	HSS-E PM	B 3.5-5				
E422	M	DIN 371	6H		3XD	HSS-E PM	B 3.5-5			TiN	
E423	M	DIN 376	6H		3XD	HSS-E PM	B 3.5-5			TiN	

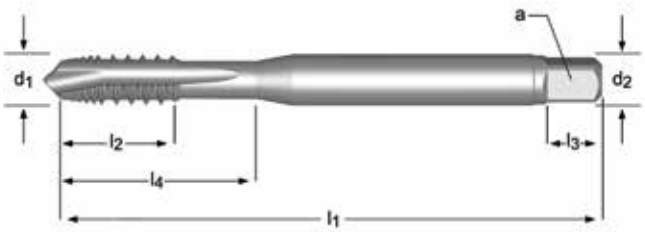

E216	E266	E422	E423
			
M3 - M10	M12 - M24	M3 - M10	M12 - M24

M	P mm	l_1 mm	l_2 mm	d_2 Ø mm	a mm	l_3 mm	z		l_4 mm	E216	E266	E422	E423
3	0.50	56	9	3.5	2.7	6	3	2.5	18	E216M3		E422M3	
4	0.70	63	12	4.5	3.4	6	3	3.3	21	E216M4		E422M4	
5	0.80	70	13	6.0	4.9	8	3	4.2	25	E216M5		E422M5	
6	1.00	80	15	6.0	4.9	8	3	5.0	30	E216M6		E422M6	
8	1.25	90	18	8.0	6.2	9	3	6.8	35	E216M8		E422M8	
10	1.50	100	20	10.0	8.0	11	3	8.5	39	E216M10		E422M10	
12	1.75	110	23	9.0	7.0	10	3	10.3			E266M12		E423M12
14	2.00	110	25	11.0	9.0	12	3	12.0			E266M14		E423M14
16	2.00	110	25	12.0	9.0	12	3	14.0			E266M16		E423M16
20	2.50	140	30	16.0	12.0	15	3	17.5			E266M20		E423M20
24	3.00	160	38	18.0	14.5	17	4	21.0			E266M24		E423M24

DORMER

E207 E258 E212 E263

- M 机用15°螺旋槽丝锥 — 提供HSS-E,直到库存更新至HSS-E PM
- M Macho Máquina Canal Helicoidal 15° — Fornecido em HSS-E até disponibilidade do novo estoque
- M Machos de máquina Estrías helicoidales a 15° — Suministrado en HSS-E hasta disponibilidad de nuevo stock
- M Machine Tap Spiral Flute 15° — Supplied in HSS-E until new stock available

E207; E258	▪	1.3 1.4
	•	1.2 1.5 7.2 7.3
E212; E263	▪	1.3 1.4
	•	1.1 1.2 1.5 4.2 4.3 7.2 7.3

E207	M	DIN 371	6H		1.5XD	HSS-E PM	C 2-3	λ15°		
E258	M	DIN 376	6H		1.5XD	HSS-E PM	C 2-3	λ15°		
E212	M	DIN 371	6H		1.5XD	HSS-E PM	C 2-3	λ15°		TiN
E263	M	DIN 376	6H		1.5XD	HSS-E PM	C 2-3	λ15°		TiN

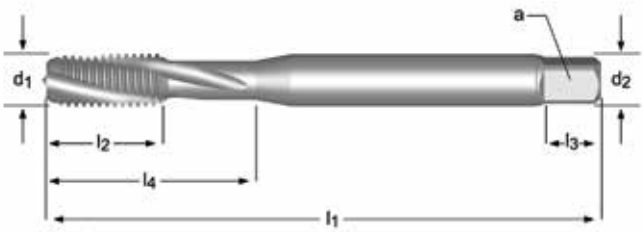

E207	E258	E212	E263
			
M2 - M10	M4 - M36	M3 - M10	M12 - M36

M	P mm	l_1 mm	l_2 mm	d_2 Ø mm	◪ a mm	l_3 mm	z	↔	l_4 mm	E207	E258	E212	E263
2	0.40	45	4	2.8	2.1	5	3	1.6	9	E207M2			
2.5	0.45	50	4	2.8	2.1	5	3	2.05	12.5	E207M2.5			
3	0.50	56	9	3.5	2.7	6	3	2.5	18	E207M3		E212M3	
4	0.70	63	12	2.8	2.1	5	3	3.3			E258M4		
4	0.70	63	12	4.5	3.4	6	3	3.3	21	E207M4		E212M4	
5	0.80	70	13	3.5	2.7	6	3	4.2			E258M5		
5	0.80	70	13	6.0	4.9	8	3	4.2	25	E207M5		E212M5	
6	1.00	80	15	4.5	3.4	6	3	5.0			E258M6		
6	1.00	80	15	6.0	4.9	8	3	5	30	E207M6		E212M6	
8	1.25	90	18	6.0	4.9	8	3	6.8			E258M8		
8	1.25	90	18	8.0	6.2	9	3	6.8	35	E207M8		E212M8	
10	1.50	100	20	10.0	8.0	11	3	8.5	39	E207M10		E212M10	
10	1.50	100	20	7.0	5.5	8	3	8.5			E258M10		
12	1.75	110	23	9.0	7.0	10	3	10.3			E258M12		E263M12
14	2.00	110	25	11.0	9.0	12	3	12.0			E258M14		E263M14
16	2.00	110	25	12.0	9.0	12	3	14.0			E258M16		E263M16
18	2.50	125	30	14.0	11.0	14	3	15.5			E258M18		E263M18
20	2.50	140	30	16.0	12.0	15	3	17.5			E258M20		E263M20

M	P mm	l_1 mm	l_2 mm	d_2 Ø mm	a mm	l_3 mm	z	↔	l_4 mm	E207	E258	E212	E263
22	2.50	140	34	18.0	14.5	17	4	19.5			E258M22		E263M22
24	3.00	160	38	18.0	14.5	17	4	21.0			E258M24		E263M24
27	3.00	160	38	20.0	16.0	19	4	24.0			E258M27		E263M27
30	3.50	180	45	22.0	18.0	21	4	26.5			E258M30		E263M30
36	4.00	200	55	28.0	22.0	25	4	32.0			E258M36		E263M36

EX006H
EX006G
EX00TIN
EX016H

- M 机用45°螺旋槽丝锥
- M Macho Máquina Canal Helicoidal 45°
- M Machos de máquina Estrías helicoidales a 45°
- M Machine Tap Spiral Flute 45°

提供HSS-E,直到库存更新至HSS-E PM

Fornecido em HSS-E até disponibilidade do novo estoque

Suministrado en HSS-E hasta disponibilidad de nuevo stock

Supplied in HSS-E until new stock available

EX006H; EX006G	■	1.1 1.2 1.3 1.4 1.5 7.1 7.2 7.3 7.4
	●	4.1 4.2 5.1 5.2
EX00TIN	■	1.1 1.2 1.3 1.4 1.5 2.1 2.2 7.3 7.4
	●	2.3 3.1 3.2 3.3 3.4 4.1 4.2 5.1 5.2
EX016H	■	1.1 1.2 1.3 1.4 1.5 2.1 2.2
	●	2.3

EX006H	M	DIN 371≤10 376≥12	6H		2.5XD	HSS-E PM	C 2-3	λ45°			L001 337 / L114 334
EX006G	M	DIN 371≤10 376≥12	6G		2.5XD	HSS-E PM	C 2-3	λ45°			
EX00TIN	M	DIN 371≤10 376≥12	6H		2.5XD	HSS-E PM	C 2-3	λ45°		TIN	
EX016H	M	DIN 371≤10 376≥12	6H		2.5XD	HSS-E PM	C 2-3	λ45°		ST	

EX006H	EX006G	EX00TIN	EX016H
			
M2 - M64	M3 - M20	M3 - M30	M2 - M64

M	P mm	l_1 mm	l_2 mm	d_2 Ø mm	a mm	l_3 mm	z	↔	l_4 mm	EX006H	EX006G	EX00TIN	EX016H
2	0.40	45	4	2.8	2.1	5	3	1.6	9	EX00M2			EX01M2
2.5	0.45	50	4	2.8	2.1	5	3	2.05	12.5	EX00M2.5			EX01M2.5
3	0.50	56	6	3.5	2.7	6	3	2.5	18	EX00M3	EX00M36G	EX00TINM3	EX01M3
3.5	0.60	56	7	4.0	3.0	6	3	2.9	20	EX00M3.5			EX01M3.5
4	0.70	63	7	4.5	3.4	6	3	3.3	21	EX00M4	EX00M46G	EX00TINM4	EX01M4
5	0.80	70	8	6.0	4.9	8	3	4.2	25	EX00M5	EX00M56G	EX00TINM5	EX01M5
6	1.00	80	10	4.5	3.4	6	3	5	31	EX00M6DIN376			EX01M6DIN376
6	1.00	80	10	6.0	4.9	8	3	5	31	EX00M6	EX00M66G	EX00TINM6	EX01M6
7	1.00	80	10	7.0	5.5	8	3	6	31	EX00M7			EX01M7
8	1.25	90	12	8.0	6.2	9	3	6.8	35	EX00M8	EX00M86G	EX00TINM8	EX01M8
8	1.25	90	13	6.0	4.9	8	3	6.8	35	EX00M8DIN376			EX01M8DIN376
10	1.50	100	15	10.0	8.0	11	3	8.5	39	EX00M10	EX00M106G	EX00TINM10	EX01M10
10	1.50	100	15	7.0	5.5	8	3	8.5	39	EX00M10DIN376			EX01M10DIN376
12	1.75	110	16	9.0	7.0	10	3	10.3	-	EX00M12	EX00M126G	EX00TINM12	EX01M12
14	2.00	110	20	11.0	9.0	12	3	12	-	EX00M14	EX00M146G	EX00TINM14	EX01M14
16	2.00	110	20	12.0	9.0	12	4	14	-	EX00M16	EX00M166G	EX00TINM16	EX01M16
18	2.50	125	25	14.0	11.0	14	4	15.5	-	EX00M18		EX00TINM18	EX01M18
20	2.50	140	25	16.0	12.0	15	4	17.5	-	EX00M20	EX00M206G	EX00TINM20	EX01M20

M	P mm	l_1 mm	l_2 mm	d_2 Ø mm	⧄ a mm	l_3 mm	z	↔	l_4 mm	EX006H	EX006G	EX00TIN	EX016H
22	2.50	140	25	18.0	14.5	17	4	19.5	-	EX00M22		EX00TINM22	EX01M22
24	3.00	160	30	18.0	14.5	17	4	21	-	EX00M24		EX00TINM24	EX01M24
27	3.00	160	30	20.0	16.0	19	4	24	-	EX00M27		EX00TINM27	EX01M27
30	3.50	180	36	22.0	18.0	21	4	26.5	-	EX00M30		EX00TINM30	EX01M30
33	3.50	180	36	25.0	20.0	23	4	29.5	-	EX00M33			EX01M33
36	4.00	200	40	28.0	22.0	25	4	32	-	EX00M36			EX01M36
39	4.00	200	40	32.0	24.0	27	4	35	-	EX00M39			EX01M39
42	4.50	200	45	32.0	24.0	27	4	37.5	-	EX00M42 [1]			EX01M42 [1]
48	5.00	250	50	36.0	29.0	32	4	43	-	EX00M48 [1]			EX01M48 [1]
52	5.00	250	50	40.0	32.0	35	5	47	-	EX00M52 [1]			EX01M52 [1]
56	5.50	250	55	40.0	32.0	35	5	50.5	-	EX00M56 [1]			EX01M56 [1]
64	6.00	315	60	50.0	39.0	42	6	58	-	EX00M64 [1]			EX01M64 [1]

[1] HSS-E

DORMER

E298

- M 机用40°螺旋槽丝锥,黄圈鲨鱼线
- M Macho Máquina Canal Helicoidal 40º , Shark - Anel Amarelo
- M Macho de máquina helicoidal 40º Shark (Anillo Amarillo)
- M Machine Tap Spiral Flute 40°, Yellow Shark

E298 ▪ 1.1 1.2 1.3 6.1 6.3
• 1.4 1.5 6.2

E298 M | DIN 371≤10 376≥12 | 6H | 2XD | HSS-E PM | C 2-3 | λ40° | Cr | L114 334

E298

M3 - M30

M	P mm	l_1 mm	l_2 mm	d_2 Ø mm	⧄ a mm	l_3 mm	z	↔	l_4 mm	E298
3	0.50	56	6	3.5	2.7	6	3	2.5	18	E298M3
4	0.70	63	7	4.5	3.4	6	3	3.3	21	E298M4
5	0.80	70	8	6.0	4.9	8	3	4.2	25	E298M5
6	1.00	80	10	6.0	4.9	8	3	5.0	30	E298M6
8	1.25	90	13	8.0	6.2	9	3	6.8	35	E298M8
10	1.50	100	15	10.0	8.0	11	3	8.5	39	E298M10
12	1.75	110	18	9.0	7.0	10	3	10.3	-	E298M12
14	2.00	110	20	11.0	9.0	12	3	12.0	-	E298M14
16	2.00	110	20	12.0	9.0	12	4	14.0	-	E298M16
18	2.50	125	25	14.0	11.0	14	4	15.5	-	E298M18
20	2.50	140	25	16.0	12.0	15	4	17.5	-	E298M20
22	2.50	140	25	18.0	14.5	17	4	19.5	-	E298M22
24	3.00	160	30	18.0	14.5	17	4	21.0	-	E298M24
27	3.00	160	30	20.0	16.0	19	4	24.0	-	E298M27
30	3.50	160	36	22.0	18.0	21	4	26.5	-	E298M30

E412

- M 机用48°螺旋槽丝锥,黄圈鲨鱼线,带背锥
- M Macho Máquina Canal Helicoidal 48º Shark - Anel Amarelo , Redução na Saída
- M Macho de máquina helicoidal 48º Shark con chaflán de salida cónica (Anillo Amarillo)
- M Machine Tap Spiral Flute 48°, Back Tapered, Yellow Shark

E412 ▪ 1.1 1.2 1.3 1.4 1.5

• 2.1 2.2 2.3 7.1 7.2 7.3 7.4

E412 M | DIN 371≤10 376≥12 | 6H | 3XD | HSS-E PM | C 2-3 | λ48° | TiAlN Top

E412

NEW

M3 - M30

M	P mm	l_1 mm	l_2 mm	d_2 Ø mm	a mm	l_3 mm	z	↔	l_4 mm	E412
3	0.50	56	6	3.5	2.7	6	3	2.5	18	E412M3
4	0.70	63	7	4.5	3.4	6	3	3.3	21	E412M4
5	0.80	70	8	6.0	4.9	8	3	4.2	25	E412M5
6	1.00	80	10	6.0	4.9	8	3	5.0	30	E412M6
8	1.25	90	13	8.0	6.2	9	3	6.8	35	E412M8
10	1.50	100	15	10.0	8.0	11	3	8.5	39	E412M10
12	1.75	110	18	9.0	7.0	10	3	10.3	-	E412M12
14	2.00	110	20	11.0	9.0	12	3	12.0	-	E412M14
16	2.00	110	20	12.0	9.0	12	4	14.0	-	E412M16
20	2.50	140	25	16.0	12.0	15	4	17.5	-	E412M20
22	2.50	140	25	18.0	14.5	17	4	19.5	-	E412M22
24	3.00	160	30	18.0	14.5	17	4	21.0	-	E412M24
27	3.00	160	30	20.0	16.0	19	4	24.0	-	E412M27
30	3.50	180	36	22.0	18.0	21	4	26.5	-	E412M30

E260
E261

- M 机用45°螺旋槽丝锥,红圈鲨鱼线,带背锥
- M Macho Máquina Canal Helicoidal 45º Shark - Anel Vermelho, Redução na saída
- M Macho de máquina helicoidal 45º Shark con chaflán de salida cónica (Anillo Rojo)
- M Machine Tap Spiral Flute 45°, Back Tapered, Red Shark

提供HSS-E,直到库存更新至HSS-E PM

Fornecido em HSS-E até disponibilidade do novo estoque

Suministrado en HSS-E hasta disponibilidad de nuevo stock

Supplied in HSS-E until new stock available

E260	▪	1.4
	•	1.5 1.6 4.2 5.2
E261	▪	1.4 1.5
	•	1.6 4.2 5.2

E260	M	DIN 371≤10 376≥12	6H		2.5XD	HSS-E PM	C 2-3	λ45°			
E261	M	DIN 371≤10 376≥12	6H		2.5XD	HSS-E PM	C 2-3	λ45°		TiAlN Top	

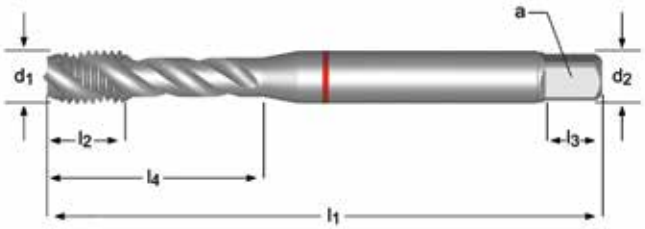

M	P mm	l_1 mm	l_2 mm	d_2 Ø mm	a mm	l_3 mm	z	↔	l_4 mm	E260	E261
3	0.50	56	6	3.5	2.7	6	3	2.5	18	E260M3	E261M3
4	0.70	63	7	4.5	3.4	6	3	3.3	21	E260M4	E261M4
5	0.80	70	8	6.0	4.9	8	3	4.2	25	E260M5	E261M5
6	1.00	80	10	6.0	4.9	8	3	5.0	30	E260M6	E261M6
8	1.25	90	12	8.0	6.2	9	3	6.8	35	E260M8	E261M8
10	1.50	100	15	10.0	8.0	11	3	8.5	39	E260M10	E261M10
12	1.75	110	16	9.0	7.0	10	3	10.3	-	E260M12	E261M12
14	2.00	110	20	11.0	9.0	12	3	12.0	-	E260M14	
16	2.00	110	20	12.0	9.0	12	4	14.0	-	E260M16	E261M16
20	2.50	140	25	16.0	12.0	15	4	17.5	-	E260M20	E261M20

E238
E239

- M 机用40°螺旋槽丝锥,蓝圈鲨鱼线,带背锥
- M Macho Máquina Canal Helicoidal 40º Shark - Anel Azul, Redução na Saída
- M Macho de máquina helicoidal 40º Shark con chaflán de salida cónica (Anillo Azul)
- M Machine Tap Spiral Flute 40°, Back Tapered, Blue Shark

提供HSS-E,直到库存更新至HSS-E PM

Fornecido em HSS-E até disponibilidade do novo estoque

Suministrado en HSS-E hasta disponibilidad de nuevo stock

Supplied in HSS-E until new stock available

E238	▪	2.1 2.2 2.3
	•	1.5
E239	▪	2.1 2.2 2.3
	•	1.2 1.3 1.4 1.5

E238	M	DIN 371≤10 376≥12	6H		2.5XD	HSS-E PM	C 2-3	λ40°		ST	L114 334
E239	M	DIN 371≤10 376≥12	6H		2.5XD	HSS-E PM	C 2-3	λ40°		Super B	

E238	E239
	
M3 - M30	M3 - M20

M	P mm	l_1 mm	l_2 mm	d_2 Ø mm	a mm	l_3 mm	z	↔	l_4 mm	E238	E239
3	0.50	56	6	3.5	2.7	6	3	2.5	18	E238M3	E239M3
4	0.70	63	7	4.5	3.4	6	3	3.3	21	E238M4	E239M4
5	0.80	70	8	6.0	4.9	8	3	4.2	25	E238M5	E239M5
6	1.00	80	10	6.0	4.9	8	3	5.0	30	E238M6	E239M6
8	1.25	90	13	8.0	6.2	9	3	6.8	33	E238M8	E239M8
10	1.50	100	15	10.0	8.0	11	3	8.5	39	E238M10	E239M10
12	1.75	110	18	9.0	7.0	10	4	10.3	-	E238M12	E239M12
14	2.00	110	20	11.0	9.0	12	4	12.0	-	E238M14	E239M14
16	2.00	110	20	12.0	9.0	12	4	14.0	-	E238M16	E239M16
18	2.50	125	25	14.0	11.0	14	4	15.5	-	E238M18	
20	2.50	140	25	16.0	12.0	15	4	17.5	-	E238M20	E239M20
22	2.50	140	25	18.0	14.5	17	4	19.8	-	E238M22	
24	3.00	160	30	18.0	14.5	17	4	21.0	-	E238M24	
27	3.00	160	30	20.0	16.0	19	4	24.0	-	E238M27	
30	3.50	180	36	22.0	18.0	21	4	26.5	-	E238M30	

DORMER

E414

- M 机用48°螺旋槽丝锥,蓝圈鲨鱼线,带背锥
- M Macho Máquina Canal Helicoidal 48º Shark - Anel Azul, Redução na Saída
- M Macho de máquina helicoidal 48º Shark con chaflán de salida cónica (Anillo Azul)
- M Machine Tap Spiral Flute 48°, Back Tapered, Blue Shark

E414					
	▪	2.1	2.2	2.3	2.4
	•	1.3	1.4	1.5	

E414 | M | DIN 371≤10 376≥12 | 6H | 3XD | HSS-E PM | C 2-3 | λ48° | Super B

E414

NEW

M3 - M20

M	P mm	l_1 mm	l_2 mm	d_2 Ø mm	a mm	l_3 mm	z	↔	l_4 mm	E414
3	0.50	56	6	3.5	2.7	6	3	2.5	18	E414M3
4	0.70	63	7	4.5	3.4	6	3	3.3	21	E414M4
5	0.80	70	8	6.0	4.9	8	3	4.2	25	E414M5
6	1.00	80	10	6.0	4.9	8	3	5.0	30	E414M6
8	1.25	90	13	8.0	6.2	9	3	6.8	35	E414M8
10	1.50	100	15	10.0	8.0	11	3	8.5	39	E414M10
12	1.75	110	18	9.0	7.0	10	3	10.3	-	E414M12
14	2.00	110	20	11.0	9.0	12	3	12.0	-	E414M14
16	2.00	110	20	12.0	9.0	12	4	14.0	-	E414M16
20	2.50	140	25	16.0	12.0	15	4	17.5	-	E414M20

E473
E474

- M 机用35°螺旋槽丝锥,绿圈鲨鱼线丝锥
- M Macho Máquina Canal Helicoidal 35º, Shark - Anel Verde
- M Macho de máquina helicoidal 35º Shark (Anillo Verde)
- M Machine Tap Spiral Flute 35°, Green Shark

提供HSS-E,直到库存更新至HSS-E PM存
Fornecido em HSS-E até disponibilidade do novo estoque
Suministrado en HSS-E hasta disponibilidad de nuevo stock
Supplied in HSS-E until new stock available

E473	▪	6.2 6.3 7.1 7.2 7.3 8.1
	•	1.1 1.2 1.3 6.1 7.4
E474	▪	6.2 7.2 7.3 7.4
	•	1.2 1.3 6.3 7.1 8.1

E473	M	DIN 371≤10 376≥12	6H		2.5XD	HSS-E PM	C 2-3	λ35°			
E474	M	DIN 371≤10 376≥12	6H		2.5XD	HSS-E PM	C 2-3	λ35°		Super B	

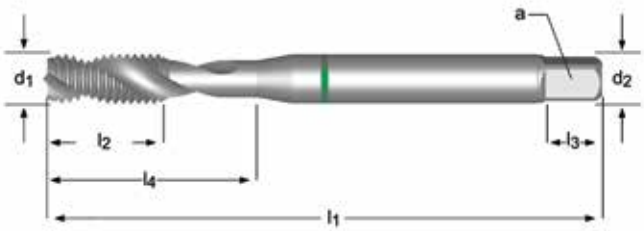

E473	E474
	
SHARK LINE	SHARK LINE
M3 - M20	M3 - M20

M	P mm	l_1 mm	l_2 mm	d_2 Ø mm	a mm	l_3 mm	z	↔	l_4 mm	E473	E474
3	0.50	56	9	3.5	2.7	6	2	2.5	18	E473M3	E474M3
4	0.70	63	12	4.5	3.4	6	2	3.3	21	E473M4	E474M4
5	0.80	70	13	6.0	4.9	8	2	4.2	25	E473M5	E474M5
6	1.00	80	15	6.0	4.9	8	2	5.0	30	E473M6	E474M6
8	1.25	90	18	8.0	6.2	9	2	6.8	35	E473M8	E474M8
10	1.50	100	20	10.0	8.0	11	2	8.5	39	E473M10	E474M10
12	1.75	110	23	9.0	7.0	10	3	10.3	-	E473M12	E474M12
16	2.00	110	25	12.0	9.0	12	3	14.0	-	E473M16	E474M16
20	2.50	140	30	16.0	12.0	15	3	17.5	-	E473M20	E474M20

E002
E002TIN
E003

- M 机用45°螺旋槽丝锥
- M Macho Máquina Canal Helicoidal 45°
- M Machos de máquina Estrías helicoidales a 45°
- M Machine Tap Spiral Flute 45°

提供HSS-E,直到库存更新至HSS-E PM

Fornecido em HSS-E até disponibilidade do novo estoque

Suministrado en HSS-E hasta disponibilidad de nuevo stock

Supplied in HSS-E until new stock available

E002	▪	1.1 1.2 1.3 1.4 1.5 7.1 7.2 7.3 7.4
	•	4.1 4.2 5.1 5.2
E002TIN	▪	1.1 1.2 1.3 1.4 1.5 2.1 2.2 7.3 7.4
	•	2.3 3.1 3.2 3.3 3.4 4.1 4.2 5.1 5.2
E003	▪	1.1 1.2 1.3 1.4 1.5
	•	2.1 2.2 2.3

E002	M	ISO 529	6H		2.5XD	HSS-E PM	C 2-3	λ45°			L002 338	L113 333
E002TIN	M	ISO 529	6H		2.5XD	HSS-E PM	C 2-3	λ45°		TiN		
E003	M	ISO 529	6H		2.5XD	HSS-E PM	C 2-3	λ45°		ST	L113 333	

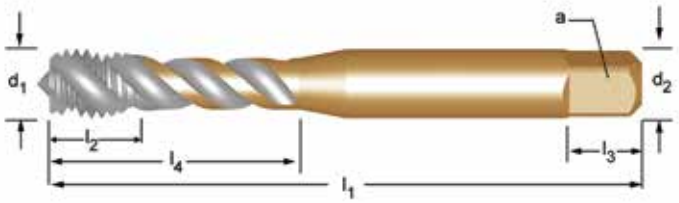

E002	E002TIN	E003
		
M2 - M24	M3 - M20	M2 - M24

M	P mm	l_1 mm	l_2 mm	d_2 Ø mm	a mm	l_3 mm	z	↔	l_4 mm	E002	E002TIN	E003
2	0.40	41	8	2.50	2.00	4	2	1.6	8	E002M2		E003M2
2.5	0.45	44.5	9.5	2.80	2.24	5	2	2.05	9.5	E002M2.5		E003M2.5
3	0.50	48	6	3.15	2.50	5	3	2.5	12.5	E002M3	E002TINM3	E003M3
4	0.70	53	7	4.00	3.15	6	3	3.3	19	E002M4	E002TINM4	E003M4
5	0.80	58	8	5.00	4.00	7	3	4.2	22	E002M5	E002TINM5	E003M5
6	1.00	66	10	6.30	5.00	8	3	5.0	27	E002M6	E002TINM6	E003M6
8	1.25	72	12	8.00	6.30	9	3	6.8	31	E002M8	E002TINM8	E003M8
10	1.50	80	15	10.00	8.00	11	3	8.5	35	E002M10	E002TINM10	E003M10
12	1.75	89	16	9.00	7.10	10	3	10.3	-	E002M12	E002TINM12	E003M12
14	2.00	95	18	11.20	9.00	12	3	12.0	-	E002M14		E003M14
16	2.00	102	18	12.50	10.00	13	4	14.0	-	E002M16	E002TINM16	E003M16
18	2.50	112	29	14.00	11.20	14	4	15.5	-	E002M18		E003M18
20	2.50	112	29	14.00	11.20	14	4	17.5	-	E002M20	E002TINM20	E003M20
22	2.50	118	29	16.00	12.50	16	4	19.5	-	E002M22		E003M22
24	3.00	130	35	18.00	14.00	18	4	21.0	-	E002M24		E003M24

E650

- M 机用30°钻攻复合螺旋槽丝锥
- M Broca-Macho Canal Helicoidal 30°
- M Combinación broca-macho Estrías helicoidales a 30°
- M Combi Taps Spiral Flute 30°

E650 • 1.1 1.2 1.3 1.4 3.2 6.2 6.3 7.1 7.2 8.1

E650 M | DORMER ISO | 6H | 1.5XD | HSS | C 2-3 | λ30° | ST | L126 332

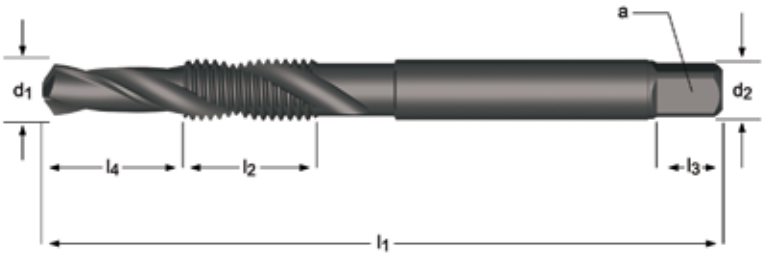

E650

M3 - M16

M	P mm	d_1 nom mm	l_1 mm	l_2 mm	l_4 mm	d_2 Ø mm	◪ a mm	l_3 mm	z	E650
3	0.50	2.5	56	10	6	3.15	2.5	5.0	2	E650M3
4	0.70	3.3	65	12	8	4.0	3.15	6.0	2	E650M4
5	0.80	4.2	69	15	10	5.0	4.00	7.0	2	E650M5
6	1.00	5.0	84	18	12	6.3	5.00	8.0	2	E650M6
8	1.25	6.8	96	21	16	8.0	6.30	9.0	2	E650M8
10	1.50	8.5	108	22	20	10.0	8.00	11.0	2	E650M10
12	1.75	10.2	113	29	24	9.0	7.10	10.0	2	E650M12
14	2.00	12.0	123	30	28	11.2	9.00	12.0	2	E650M14
16	2.00	14.0	134	32	32	12.5	10.00	13.0	2	E650M16

E605

- M 机用40°超长螺旋槽丝锥
- M Macho Máquina Extra Longo Canal Helicoidal 40°
- M Machos de máquina Extra largo Estrías helicoidales a 40°
- M Machine Tap, Extra Long Spiral Flute 40°

提供HSS-E,直到库存更新至HSS-E PM
Fornecido em HSS-E até disponibilidade do novo estoque
Suministrado en HSS-E hasta disponibilidad de nuevo stock
Supplied in HSS-E until new stock available

E605 • 1.2 1.3 1.4 1.5 2.1 2.2 2.3 5.2 7.1 7.2 7.3 7.4

E605 M | ISO 2283 | 6H | 2XD | HSS-E PM | C 2-3 | λ40°

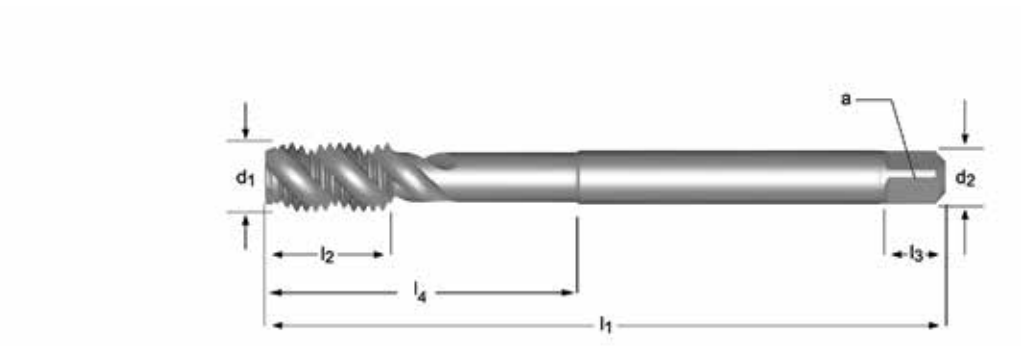

E605

M3 - M20

M	P mm	l_1 mm	l_2 mm	d_2 Ø mm	a mm	l_3 mm	z	↔	l_4 mm	E605
3	0.50	66	9	3.15	2.50	5	2	2.5	21	E605M3
4	0.70	73	9	4.00	3.15	6	2	3.3	22	E605M4
5	0.80	79	12	5.00	4.00	7	3	4.2	26	E605M5
6	1.00	89	12	6.30	5.00	8	3	5	29	E605M6
8	1.25	97	12	6.30	5.00	8	3	6.8	-	E605M8
10	1.50	108	14	8.00	6.30	9	3	8.5	-	E605M10
12	1.75	119	23	9.00	7.10	10	3	10.3	-	E605M12
14	2.00	127	25	11.20	9.00	12	3	12	-	E605M14
16	2.00	137	25	12.50	10.00	13	3	14	-	E605M16
20	2.50	149	30	14.00	11.20	14	3	17.5	-	E605M20

E291
E292

- M 机用挤压丝锥
- M Macho Máquina de Laminação
- M Machos de laminación
- M Machine Forming Tap

E294

- M 机用挤压丝锥,带油槽
- M Macho Máquina de Laminação com ranhuras para Lubrificação
- M Machos de laminación, con ranuras de lubrificación
- M Machine Forming Tap, Oil Grooves

E289

- M 机用挤压丝锥,带油槽和内冷
- M Macho Máquina de Laminação com ranhuras para Lubrificação e Refrigeração Interna
- M Machos de laminación, con ranuras de lubrificación y Refrigeración Interna
- M Machine Forming Tap, Oil Grooves and Internal Coolant

E291	■	1.1 1.2 1.3 1.4 7.1 7.2
	•	7.3
E292: E294; E289	■	1.1 1.2 1.3 1.4 2.1 2.2 4.1 5.1 7.1 7.2 7.3
	•	1.5 2.3 5.2 6.1 6.3 7.4

E291	M	DIN 2174	6HX		3XD	HSS-E	C 2-3.5				
E292	M	DIN 2174	6HX		3XD	HSS-E	C 2-3.5			TiN	
E294	M	DIN 2174	6HX		3.5XD	HSS-E	C 2-3.5			TiN	
E289	M	DIN 2174	6HX		3.5XD	HSS-E	C 2-3.5			TiN	

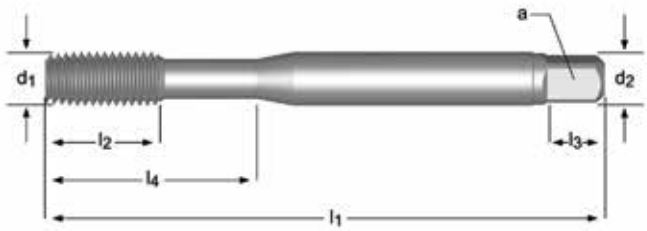

E291	E292	E294	E289
			NEW 
M1.6 - M16	M1.6 - M16	M3 - M16	M5 - M12

M	P mm	l_1 mm	l_2 mm	d_2 Ø mm	a mm	l_3 mm	z	↔	l_4 mm	E291	E292	E294	E289
1.6	0.35	40	8	2.5	2.1	5	3	1.4	-	E291M1.6	E292M1.6		
2	0.40	45	6	2.8	2.1	5	3	1.8	11	E291M2	E292M2		
2.5	0.45	50	8	2.8	2.1	5	3	2.3	12.5	E291M2.5	E292M2.5		
3	0.50	56	9	3.5	2.7	6	4	2.8	18	E291M3	E292M3	E294M3	
3.5	0.60	56	11	4.0	3.0	6	4	3.2	20	E291M3.5	E292M3.5		
4	0.70	63	12	4.5	3.4	6	5	3.7	21	E291M4	E292M4	E294M4	
5	0.80	70	13	6.0	4.9	8	5	4.6	25	E291M5	E292M5	E294M5	E289M5
6	1.00	80	15	6.0	4.9	8	5	5.5	30	E291M6	E292M6	E294M6	E289M6
8	1.25	90	18	8.0	6.2	9	5	7.4	35	E291M8	E292M8	E294M8	E289M8
10	1.50	100	20	10.0	8.0	11	5	9.3	39	E291M10	E292M10	E294M10	E289M10
12	1.75	110	23	9.0	7.0	10	5	11.2	-	E291M12	E292M12	E294M12	E289M12
14	2.00	110	25	11.0	9.0	12	6	13.0	-			E294M14	
16	2.00	110	25	12.0	9.0	12	6	15.0	-	E291M16	E292M16	E294M16	

E293

- M 机用挤压丝锥
- M Macho Máquina de Laminação
- M Machos de laminación
- M Machine Forming Tap

E293												
	■	1.1	1.2	1.3	1.4	2.1	2.2	4.1	5.1	7.1	7.2	7.3
	•	1.5	2.3	5.2	6.1	6.3	7.4					

E293 M DIN 2174 6HX 3XD HSS-E E 1.5-2 TiN

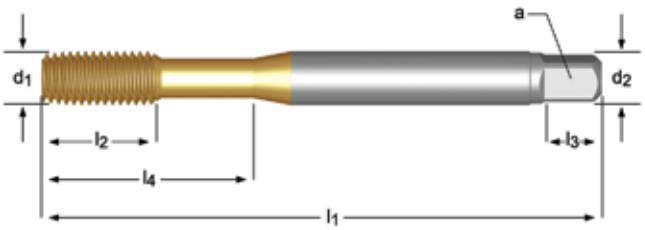

E293

M3 - M16

M	P mm	l_1 mm	l_2 mm	d_2 Ø mm	a mm	l_3 mm	z	↔	l_4 mm	E293
3	0.50	56	9	3.5	2.7	6	4	2.8	18	E293M3
4	0.70	63	12	4.5	3.4	6	5	3.7	21	E293M4
5	0.80	70	13	6.0	4.9	8	5	4.6	25	E293M5
6	1.00	80	15	6.0	4.9	8	5	5.5	30	E293M6
8	1.25	90	18	8.0	6.2	9	5	7.4	35	E293M8
10	1.50	100	20	10.0	8.0	11	5	9.3	39	E293M10
12	1.75	110	23	9.0	7.0	10	5	11.2	-	E293M12
16	2.00	110	25	12.0	9.0	12	6	15.0	-	E293M16

E295
E296

- M 机用挤压丝锥
- M Macho Máquina de Laminação
- M Machos de laminación
- M Machine Forming Tap

E295; E296

▪ 1.1 1.2 1.3 1.4 2.1 2.2 4.1 5.1 7.1 7.2 7.3

• 1.5 2.3 5.2 6.1 6.3 7.4

E295 M DIN 2174 6GX 3XD HSS-E C 2-3.5 TiN

E296 M DIN 2174 6GX 3XD HSS-E E 1.5-2 TiN

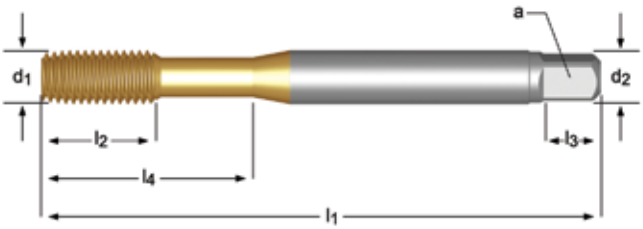

E295	E296
	
M3 - M12	M3 - M10

M	P mm	l_1 mm	l_2 mm	d_2 Ø mm	a mm	l_3 mm	z	↔	l_4 mm	E295	E296
3	0.50	56	9	3.5	2.7	6	4	2.8	18	E295M3	E296M3
3.5	0.60	56	11	4.0	3.0	6	4	3.2	20	E295M3.5	
4	0.70	63	12	4.5	3.4	6	5	3.7	21	E295M4	E296M4
5	0.80	70	13	6.0	4.9	8	5	4.6	25	E295M5	E296M5
6	1.00	80	15	6.0	4.9	8	5	5.5	30	E295M6	E296M6
8	1.25	90	18	8.0	6.2	9	5	7.4	35	E295M8	E296M8
10	1.50	100	20	10.0	8.0	11	5	9.3	39	E295M10	E296M10
12	1.75	110	23	9.0	7.0	10	5	11.2	-	E295M12	

DORMER

E105

- MF 手用直槽丝锥
- MF Macho Manual Canal Reto
- MF Machos de mano Estrías rectas
- MF Hand Tap Straight Flute

E105 • 1.1 1.2 1.3 1.4 1.5 3.1 3.2 3.3 3.4 6.1 6.2 6.3 6.4 7.2 7.3 7.4 8.2 8.3

E105 MF | DIN 2181 | 6H | 1.5XD | HSS | C 2-3

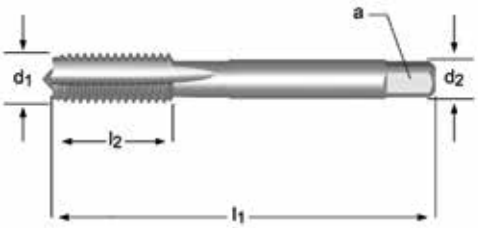

E105

M2.5 - M50

MF	P mm	l_1 mm	l_2 mm	d_2 Ø mm	a mm	z		E105
2.5	0.35	40	9	2.8	2.1	3	2.15	E105M2.5X.35NO3
2.5	0.35	40	9	2.8	2.1	3	2.15	E105M2.5X.35NO9
3	0.35	40	9	3.5	2.7	3	2.65	E105M3X.35NO3
3	0.35	40	9	3.5	2.7	3	2.65	E105M3X.35NO9
3.5	0.35	45	10	4.0	3.0	3	3.2	E105M3.5X.35NO3
3.5	0.35	45	10	4.0	3.0	3	3.2	E105M3.5X.35NO9
4	0.50	45	12	4.5	3.4	3	3.5	E105M4X.5NO3
4	0.50	45	12	4.5	3.4	3	3.5	E105M4X.5NO9
5	0.50	50	14	6.0	4.9	3	4.5	E105M5X.5NO3
5	0.50	50	14	6.0	4.9	3	4.5	E105M5X.5NO9
5.5	0.50	56	16	6.0	4.9	3	5	E105M5.5X.5NO9
6	0.75	56	16	6.0	4.9	3	5.3	E105M6X.75NO3
6	0.75	56	16	6.0	4.9	3	5.3	E105M6X.75NO9
7	0.75	56	16	6.0	4.9	3	6.3	E105M7X.75NO3
7	0.75	56	16	6.0	4.9	3	6.3	E105M7X.75NO9
8	0.75	56	16	6.0	4.9	3	7.3	E105M8X.75NO3
8	0.75	56	16	6.0	4.9	3	7.3	E105M8X.75NO9
8	1.00	63	19	6.0	4.9	3	7	E105M8X1.0NO3
8	1.00	63	19	6.0	4.9	3	7	E105M8X1.0NO9
9	0.75	63	19	7.0	5.5	3	8.3	E105M9X.75NO3
9	0.75	63	19	7.0	5.5	3	8.3	E105M9X.75NO9
9	1.00	63	19	7.0	5.5	3	8	E105M9X1.0NO3
9	1.00	63	19	7.0	5.5	3	8	E105M9X1.0NO9
10	0.75	63	16	7.0	5.5	3	9.3	E105M10X.75NO3
10	0.75	63	16	7.0	5.5	3	9.3	E105M10X.75NO9
10	1.00	63	16	7.0	5.5	3	9	E105M10X1.0NO3
10	1.00	63	16	7.0	5.5	3	9	E105M10X1.0NO9
10	1.25	70	22	7.0	5.5	3	8.8	E105M10X1.25NO3
10	1.25	70	22	7.0	5.5	3	8.8	E105M10X1.25NO9
11	0.75	63	15	8.0	6.2	3	10.3	E105M11X.75NO3
11	0.75	63	15	8.0	6.2	3	10.3	E105M11X.75NO9
11	1.00	63	15	8.0	6.2	3	10	E105M11X1.0NO3
11	1.00	63	15	8.0	6.2	3	10	E105M11X1.0NO9
12	1.00	70	16	9.0	7.0	3	11	E105M12X1.0NO3
12	1.00	70	16	9.0	7.0	3	11	E105M12X1.0NO9
12	1.25	70	16	9.0	7.0	3	10.8	E105M12X1.25NO3
12	1.25	70	16	9.0	7.0	3	10.8	E105M12X1.25NO9
12	1.50	70	16	9.0	7.0	3	10.5	E105M12X1.5NO3
12	1.50	70	16	9.0	7.0	3	10.5	E105M12X1.5NO9
14	1.00	70	16	11.0	9.0	4	13	E105M14X1.0NO3

NO1 - NO9
219

MF	P mm	l_1 mm	l_2 mm	d_2 Ø mm	a mm	z		E105
14	1.00	70	16	11.0	9.0	4	13	E105M14X1.0NO9
14	1.25	70	16	11.0	9.0	4	12.8	E105M14X1.25NO3
14	1.25	70	16	11.0	9.0	4	12.8	E105M14X1.25NO9
14	1.50	70	16	11.0	9.0	4	12.5	E105M14X1.5NO3
14	1.50	70	16	11.0	9.0	4	12.5	E105M14X1.5NO9
15	1.00	70	16	12.0	9.0	4	14	E105M15X1.0NO3
15	1.00	70	16	12.0	9.0	4	14	E105M15X1.0NO9
15	1.50	70	16	12.0	9.0	4	13.5	E105M15X1.5NO3
15	1.50	70	16	12.0	9.0	4	13.5	E105M15X1.5NO9
16	1.00	70	16	12.0	9.0	4	15	E105M16X1.0NO3
16	1.00	70	16	12.0	9.0	4	15	E105M16X1.0NO9
16	1.50	70	16	12.0	9.0	4	14.5	E105M16X1.5NO3
16	1.50	70	16	12.0	9.0	4	14.5	E105M16X1.5NO9
18	1.00	80	18	14.0	11.0	4	17	E105M18X1.0NO3
18	1.00	80	18	14.0	11.0	4	17	E105M18X1.0NO9
18	1.50	80	18	14.0	11.0	4	16.5	E105M18X1.5NO3
18	1.50	80	18	14.0	11.0	4	16.5	E105M18X1.5NO9
20	1.00	80	18	16.0	12.0	4	19	E105M20X1.0NO3
20	1.00	80	18	16.0	12.0	4	19	E105M20X1.0NO9
20	1.50	80	18	16.0	12.0	4	18.5	E105M20X1.5NO3
20	1.50	80	18	16.0	12.0	4	18.5	E105M20X1.5NO9
22	1.00	80	22	18.0	14.5	4	21	E105M22X1.0NO3
22	1.00	80	22	18.0	14.5	4	21	E105M22X1.0NO9
22	1.50	80	22	18.0	14.5	4	20.5	E105M22X1.5NO3
22	1.50	80	22	18.0	14.5	4	20.5	E105M22X1.5NO9
24	1.00	90	22	18.0	14.5	4	23	E105M24X1.0NO3
24	1.00	90	22	18.0	14.5	4	23	E105M24X1.0NO9
24	1.50	90	22	18.0	14.5	4	22.5	E105M24X1.5NO3
24	1.50	90	22	18.0	14.5	4	22.5	E105M24X1.5NO9
24	2.00	90	22	18.0	14.5	4	22	E105M24X2.0NO3
24	2.00	90	22	18.0	14.5	4	22	E105M24X2.0NO9
25	1.50	90	22	18.0	14.5	4	23.5	E105M25X1.5NO3
25	1.50	90	22	18.0	14.5	4	23.5	E105M25X1.5NO9
25	2.00	90	22	18.0	14.5	4	23	E105M25X2.0NO3
25	2.00	90	22	18.0	14.5	4	23	E105M25X2.0NO9
27	1.50	90	22	20.0	16.0	4	25.5	E105M27X1.5NO3
27	1.50	90	22	20.0	16.0	4	25.5	E105M27X1.5NO9
27	2.00	90	22	20.0	16.0	4	25	E105M27X2.0NO3
27	2.00	90	22	20.0	16.0	4	25	E105M27X2.0NO9
28	1.50	90	22	20.0	16.0	4	26.5	E105M28X1.5NO3
28	1.50	90	22	20.0	16.0	4	26.5	E105M28X1.5NO9
28	2.00	90	22	20.0	16.0	4	26	E105M28X2.0NO3
28	2.00	90	22	20.0	16.0	4	26	E105M28X2.0NO9
30	1.50	90	22	22.0	18.0	4	28.5	E105M30X1.5NO3
30	1.50	90	22	22.0	18.0	4	28.5	E105M30X1.5NO9
30	2.00	90	22	22.0	18.0	4	28	E105M30X2.0NO3
30	2.00	90	22	22.0	18.0	4	28	E105M30X2.0NO9
32	1.50	90	22	22.0	18.0	4	30.5	E105M32X1.5NO3
32	1.50	90	22	22.0	18.0	4	30.5	E105M32X1.5NO9
32	2.00	90	22	22.0	18.0	4	30	E105M32X2.0NO3
32	2.00	90	22	22.0	18.0	4	30	E105M32X2.0NO9
36	1.50	100	25	28.0	22.0	4	34.5	E105M36X1.5NO3
36	1.50	100	25	28.0	22.0	4	34.5	E105M36X1.5NO9
36	2.00	125	40	28.0	22.0	4	34	E105M36X2.0NO3
36	2.00	125	40	28.0	22.0	4	34	E105M36X2.0NO9
36	3.00	125	40	28.0	22.0	4	33	E105M36X3.0NO3
36	3.00	125	40	28.0	22.0	4	33	E105M36X3.0NO9
40	1.50	110	25	32.0	24.0	4	38.5	E105M40X1.5NO3
40	1.50	110	25	32.0	24.0	4	38.5	E105M40X1.5NO9
40	2.00	125	40	32.0	24.0	4	38	E105M40X2.0NO3
40	2.00	125	40	32.0	24.0	4	38	E105M40X2.0NO9
40	3.00	125	40	32.0	24.0	4	37	E105M40X3.0NO3
40	3.00	125	40	32.0	24.0	4	37	E105M40X3.0NO9
42	1.50	110	25	32.0	24.0	4	40.5	E105M42X1.5NO3
42	1.50	110	25	32.0	24.0	4	40.5	E105M42X1.5NO9
42	2.00	125	40	32.0	24.0	4	40	E105M42X2.0NO3
42	2.00	125	40	32.0	24.0	4	40	E105M42X2.0NO9
42	3.00	125	40	32.0	24.0	4	39	E105M42X3.0NO3
42	3.00	125	40	32.0	24.0	4	39	E105M42X3.0NO9
45	1.50	110	25	36.0	29.0	6	43.5	E105M45X1.5NO3

NO1 - NO9
219

MF	P mm	l_1 mm	l_2 mm	d_2 Ø mm	a mm	z		E105
45	1.50	110	25	36.0	29.0	6	43.5	E105M45X1.5NO9
45	2.00	125	40	36.0	29.0	6	43	E105M45X2.0NO3
45	2.00	125	40	36.0	29.0	6	43	E105M45X2.0NO9
45	3.00	125	40	36.0	29.0	6	42	E105M45X3.0NO3
45	3.00	125	40	36.0	29.0	6	42	E105M45X3.0NO9
48	1.50	140	40	36.0	29.0	6	46.5	E105M48X1.5NO3
48	1.50	140	40	36.0	29.0	6	46.5	E105M48X1.5NO9
48	2.00	140	40	36.0	29.0	6	46	E105M48X2.0NO3
48	2.00	140	40	36.0	29.0	6	46	E105M48X2.0NO9
48	3.00	140	40	36.0	29.0	6	45	E105M48X3.0NO3
48	3.00	140	40	36.0	29.0	6	45	E105M48X3.0NO9
50	1.50	140	40	36.0	29.0	6	48.5	E105M50X1.5NO3
50	1.50	140	40	36.0	29.0	6	48.5	E105M50X1.5NO9
50	2.00	140	40	36.0	29.0	6	48	E105M50X2.0NO3
50	2.00	140	40	36.0	29.0	6	48	E105M50X2.0NO9
50	3.00	140	40	36.0	29.0	6	47	E105M50X3.0NO3
50	3.00	140	40	36.0	29.0	6	47	E105M50X3.0NO9

E268 E242 E290

- MF 机用直槽丝锥 — 提供HSS-E,直到库存更新至HSS-E PM
- MF Macho Máquina Canal Reto — Fornecido em HSS-E até disponibilidade do novo estoque
- MF Machos de máquina Estrías rectas — Suministrado en HSS-E hasta disponibilidad de nuevo stock
- MF Machine Tap Straight Flute — Supplied in HSS-E until new stock available

E268; E242; E290 • 1.1 1.2 1.3 1.4 1.5 3.1 3.2 3.3 6.2 6.3 7.2 7.3 8.2

E268	MF	DIN 374	6H		1.5XD	HSS-E PM	C 2-3					
E242	MF	DIN 371	6H		1.5XD	HSS-E PM	C 2-3					
E290	MF	DIN 374	6H		1.5XD	HSS-E PM	C 2-3					

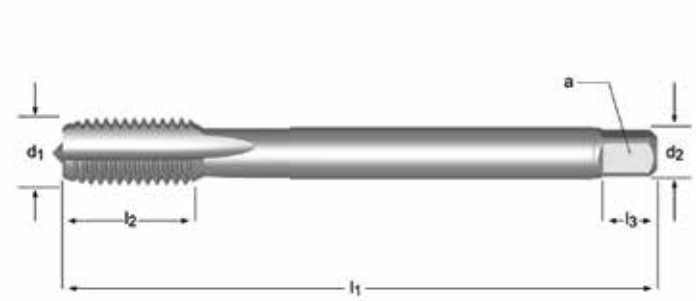

E268	E242	E290
		
M4 - M50	M8 - M10	M12 - M24

MF	P mm	l_1 mm	l_2 mm	d_2 Ø mm	a mm	l_3 mm	z	↔	l_4 mm	E268	E242	E290
4	0.50	63	10	2.8	2.1	5	3	3.5		E268M4X.5		
5	0.50	70	13	3.5	2.7	6	3	4.5		E268M5X.5		
6	0.75	80	15	4.5	3.4	6	3	5.3		E268M6X.75		
7	0.75	80	15	5.5	4.3	7	3	6.3		E268M7X.75		
8	0.75	80	15	6.0	4.9	8	3	7.3		E268M8X.75		
8	1.00	90	18	6.0	4.9	8	3	7.0		E268M8X1.0		
8	1.00	90	18	8.0	6.2	9	3	7.0	35		E242M8X1.0	
9	1.00	90	18	6.0	4.9	8	3	8.0		E268M9X1.0		
10	0.75	90	20	7.0	5.5	8	3	9.3		E268M10X.75		
10	1.00	100	20	10.0	8.0	11	3	9.0	39		E242M10X1.0	
10	1.00	90	20	7.0	5.5	8	3	9.0		E268M10X1.0		
10	1.25	100	20	7.0	5.5	8	3	8.8		E268M10X1.25		
11	1.00	90	20	8.0	6.2	9	3	10.0		E268M11X1.0		
12	1.00	100	21	9.0	7.0	10	4	11.0		E268M12X1.0		E290M12X1.0
12	1.25	100	21	9.0	7.0	10	4	10.8		E268M12X1.25		
12	1.50	100	21	9.0	7.0	10	4	10.5		E268M12X1.5		E290M12X1.5
14	1.00	100	21	11.0	9.0	12	4	13.0		E268M14X1.0		E290M14X1.0
14	1.25	100	21	11.0	9.0	12	4	12.8		E268M14X1.25		
14	1.50	100	21	11.0	9.0	12	4	12.5		E268M14X1.5		E290M14X1.5
15	1.50	100	21	12.0	9.0	12	4	13.5		E268M15X1.5		
16	1.00	100	21	12.0	9.0	12	4	15.0		E268M16X1.0		E290M16X1.0
16	1.50	100	21	12.0	9.0	12	4	14.5		E268M16X1.5		E290M16X1.5
18	1.00	110	24	14.0	11.0	14	4	17.0		E268M18X1.0		
18	1.50	110	24	14.0	11.0	14	4	16.5		E268M18X1.5		E290M18X1.5
20	1.00	125	24	16.0	12.0	15	4	19.0		E268M20X1.0		
20	1.50	125	24	16.0	12.0	15	4	18.5		E268M20X1.5		E290M20X1.5
22	1.00	125	25	18.0	14.5	17	4	21.0		E268M22X1.0		
22	1.50	125	25	18.0	14.5	17	4	20.5		E268M22X1.5		E290M22X1.5

MF	P mm	l_1 mm	l_2 mm	d_2 Ø mm	⧄ a mm	l_3 mm	z	↔	l_4 mm	E268	E242	E290
24	1.00	140	28	18.0	14.5	17	4	23.0		E268M24X1.0		
24	1.50	140	28	18.0	14.5	17	4	22.5		E268M24X1.5		E290M24X1.5
24	2.00	140	28	18.0	14.5	17	4	22.0		E268M24X2.0		
25	1.50	140	28	18.0	14.5	17	4	23.5		E268M25X1.5		
25	2.00	140	28	18.0	14.5	17	4	23.0		E268M25X2.0		
26	1.50	140	28	18.0	14.5	17	4	24.5		E268M26X1.5		
26	2.00	140	28	18.0	14.5	17	4	24.0		E268M26X2.0		
27	1.50	140	28	20.0	16.0	19	4	25.5		E268M27X1.5		
27	2.00	140	28	20.0	16.0	19	4	25.0		E268M27X2.0		
28	1.50	140	28	20.0	16.0	19	4	26.5		E268M28X1.5		
28	2.00	140	28	20.0	16.0	19	4	26.0		E268M28X2.0		
30	1.50	150	28	22.0	18.0	21	4	28.5		E268M30X1.5		
30	2.00	150	28	22.0	18.0	21	4	28.0		E268M30X2.0		
32	1.50	150	28	22.0	18.0	21	4	30.5		E268M32X1.5		
32	2.00	150	28	22.0	18.0	21	4	30.0		E268M32X2.0		
33	1.50	160	30	25.0	20.0	23	4	31.5		E268M33X1.5		
34	1.50	170	30	28.0	22.0	25	4	32.5		E268M34X1.5		
35	1.50	170	30	28.0	22.0	25	4	33.5		E268M35X1.5		
36	1.50	170	30	28.0	22.0	25	4	34.5		E268M36X1.5		
36	2.00	170	30	28.0	22.0	25	4	34.0		E268M36X2.0		
36	3.00	200	55	28.0	22.0	25	4	33.0		E268M36X3.0		
40	1.50	170	30	32.0	24.0	27	4	38.5		E268M40X1.5		
40	2.00	170	30	32.0	24.0	27	4	38.0		E268M40X2.0		
40	3.00	200	60	32.0	24.0	27	4	37.0		E268M40X3.0		
42	1.50	170	30	32.0	24.0	27	4	40.5		E268M42X1.5 [1)]		
42	2.00	170	30	32.0	24.0	27	4	40.0		E268M42X2.0 [1)]		
42	3.00	200	60	32.0	24.0	27	4	39.0		E268M42X3.0 [1)]		
45	1.50	180	32	36.0	29.0	32	6	43.5		E268M45X1.5 [1)]		
45	2.00	180	32	36.0	29.0	32	6	43.0		E268M45X2.0 [1)]		
45	3.00	200	42	36.0	29.0	32	6	42.0		E268M45X3.0 [1)]		
48	1.50	190	32	36.0	29.0	32	6	46.5		E268M48X1.5 [1)]		
48	2.00	190	32	36.0	29.0	32	6	46.0		E268M48X2.0 [1)]		
48	3.00	225	50	36.0	29.0	32	6	45.0		E268M48X3.0 [1)]		
50	1.50	190	32	36.0	29.0	32	6	48.5		E268M50X1.5 [1)]		
50	2.00	190	30	36.0	29.0	32	6	48.0		E268M50X2.0 [1)]		
50	3.00	225	50	36.0	29.0	32	6	47.0		E268M50X3.0 [1)]		

1) HSS-E

E513

- MF 机用直槽丝锥
- MF Macho Máquina Canal Reto
- MF Machos de máquina Estrías rectas
- MF Machine Tap Straight Flute

E513 • 1.1 1.2 1.3 1.4 1.5 3.1 3.2 3.3 3.4 6.1 6.2 6.3 6.4 7.2 7.3 7.4 8.2 8.3

E513 MF ISO 529 6H 1.5XD HSS

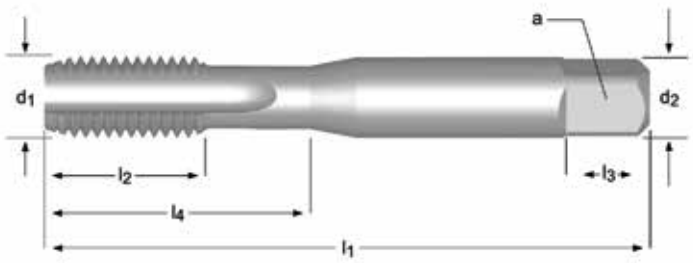

E513

M3 - M50

MF	P mm	l_1 mm	l_2 mm	d_2 Ø mm	a mm	l_3 mm	z	↔	l_4 mm	E513
3	0.35	48	12.5	3.15	2.50	5	3	2.65	12.5	E513M3X.35NO1
3	0.35	48	12.5	3.15	2.50	5	3	2.65	12.5	E513M3X.35NO2
3	0.35	48	12.5	3.15	2.50	5	3	2.65	12.5	E513M3X.35NO3
3.5	0.35	48	12.5	3.15	2.50	5	3	3.2	12.5	E513M3.5X.35NO3
4	0.50	53	14	4.00	3.15	6	3	3.5	14	E513M4X.5NO1
4	0.50	53	14	4.00	3.15	6	3	3.5	14	E513M4X.5NO2
4	0.50	53	14	4.00	3.15	6	3	3.5	14	E513M4X.5NO3
4	0.50	53	14	4.00	3.15	6	3	3.5	14	E513M4X.5NO7
5	0.50	58	11	5.00	4.00	7	3	4.5	22	E513M5X.5NO1
5	0.50	58	11	5.00	4.00	7	3	4.5	22	E513M5X.5NO2
5	0.50	58	11	5.00	4.00	7	3	4.5	22	E513M5X.5NO3
5	0.50	58	11	5.00	4.00	7	3	4.5	22	E513M5X.5NO7
5	0.75	58	11	5.00	4.00	7	3	4.3	22	E513M5X.75NO1
5	0.75	58	11	5.00	4.00	7	3	4.3	22	E513M5X.75NO2
5	0.75	58	11	5.00	4.00	7	3	4.3	22	E513M5X.75NO3
6	0.50	66	13	6.30	5.00	8	3	5.5	26	E513M6X.5NO1
6	0.50	66	13	6.30	5.00	8	3	5.5	26	E513M6X.5NO2
6	0.50	66	13	6.30	5.00	8	3	5.5	26	E513M6X.5NO3
6	0.75	66	13	6.30	5.00	8	3	5.3	26	E513M6X.75NO1
6	0.75	66	13	6.30	5.00	8	3	5.3	26	E513M6X.75NO2
6	0.75	66	13	6.30	5.00	8	3	5.3	26	E513M6X.75NO3
6	0.75	66	13	6.30	5.00	8	3	5.3	26	E513M6X.75NO7
7	0.75	66	13	7.10	5.60	8	3	6.3	26	E513M7X.75NO1
7	0.75	66	13	7.10	5.60	8	3	6.3	26	E513M7X.75NO2
7	0.75	66	13	7.10	5.60	8	3	6.3	26	E513M7X.75NO3
8	0.50	72	16	8.00	6.30	9	3	7.5	29	E513M8X.5NO1
8	0.50	72	16	8.00	6.30	9	3	7.5	29	E513M8X.5NO2
8	0.50	72	16	8.00	6.30	9	3	7.5	29	E513M8X.5NO3
8	0.75	72	16	8.00	6.30	9	3	7.3	29	E513M8X.75NO1
8	0.75	72	16	8.00	6.30	9	3	7.3	29	E513M8X.75NO2
8	0.75	72	16	8.00	6.30	9	3	7.3	29	E513M8X.75NO3
8	0.75	72	16	8.00	6.30	9	3	7.3	29	E513M8X.75NO7
8	1.00	72	16	8.00	6.30	9	3	7	29	E513M8X1.0NO1
8	1.00	72	16	8.00	6.30	9	3	7	29	E513M8X1.0NO2
8	1.00	72	16	8.00	6.30	9	3	7	29	E513M8X1.0NO3
8	1.00	72	16	8.00	6.30	9	3	7	29	E513M8X1.0NO7
9	0.75	72	16	9.00	7.10	10	3	8.3	29	E513M9X.75NO3
9	1.00	72	16	9.00	7.10	10	3	8	29	E513M9X1.0NO1
9	1.00	72	16	9.00	7.10	10	3	8	29	E513M9X1.0NO2
9	1.00	72	16	9.00	7.10	10	3	8	29	E513M9X1.0NO3

NO1 - NO9 219

DORMER

MF	P mm	l_1 mm	l_2 mm	d_2 Ø mm	a mm	l_3 mm	z	↔	l_4 mm	E513
10	0.50	80	18	10.00	8.00	11	3	9.5	34	E513M10X.5NO3
10	0.75	80	18	10.00	8.00	11	3	9.3	34	E513M10X.75NO1
10	0.75	80	18	10.00	8.00	11	3	9.3	34	E513M10X.75NO2
10	0.75	80	18	10.00	8.00	11	3	9.3	34	E513M10X.75NO3
10	1.00	80	18	10.00	8.00	11	3	9	34	E513M10X1.0NO1
10	1.00	80	18	10.00	8.00	11	3	9	34	E513M10X1.0NO2
10	1.00	80	18	10.00	8.00	11	3	9	34	E513M10X1.0NO3
10	1.00	80	18	10.00	8.00	11	3	9	34	E513M10X1.0NO6
10	1.00	80	18	10.00	8.00	11	3	9	34	E513M10X1.0NO7
10	1.25	80	18	10.00	8.00	11	3	8.8	34	E513M10X1.25NO1
10	1.25	80	18	10.00	8.00	11	3	8.8	34	E513M10X1.25NO2
10	1.25	80	18	10.00	8.00	11	3	8.8	34	E513M10X1.25NO3
10	1.25	80	18	10.00	8.00	11	3	8.8	34	E513M10X1.25NO6
10	1.25	80	18	10.00	8.00	11	3	8.8	34	E513M10X1.25NO7
11	0.75	85	19	8.00	6.30	9	3	10.3	-	E513M11X.75NO1
11	0.75	85	19	8.00	6.30	9	3	10.3	-	E513M11X.75NO2
11	0.75	85	19	8.00	6.30	9	3	10.3	-	E513M11X.75NO3
11	1.00	85	19	8.00	6.30	9	3	10	-	E513M11X1.0NO1
11	1.00	85	19	8.00	6.30	9	3	10	-	E513M11X1.0NO2
11	1.00	85	19	8.00	6.30	9	3	10	-	E513M11X1.0NO3
11	1.25	85	19	8.00	6.30	9	3	9.8	-	E513M11X1.25NO3
12	0.75	89	22	9.00	7.10	10	3	11.3	-	E513M12X.75NO3
12	1.00	89	22	9.00	7.10	10	3	11	-	E513M12X1.0NO1
12	1.00	89	22	9.00	7.10	10	3	11	-	E513M12X1.0NO2
12	1.00	89	22	9.00	7.10	10	3	11	-	E513M12X1.0NO3
12	1.00	89	22	9.00	7.10	10	3	11	-	E513M12X1.0NO7
12	1.25	89	22	9.00	7.10	10	3	10.8	-	E513M12X1.25NO1
12	1.25	89	22	9.00	7.10	10	3	10.8	-	E513M12X1.25NO2
12	1.25	89	22	9.00	7.10	10	3	10.8	-	E513M12X1.25NO3
12	1.25	89	22	9.00	7.10	10	3	10.8	-	E513M12X1.25NO6
12	1.25	89	22	9.00	7.10	10	3	10.8	-	E513M12X1.25NO7
12	1.50	89	22	9.00	7.10	10	3	10.5	-	E513M12X1.5NO1
12	1.50	89	22	9.00	7.10	10	3	10.5	-	E513M12X1.5NO2
12	1.50	89	22	9.00	7.10	10	3	10.5	-	E513M12X1.5NO3
12	1.50	89	22	9.00	7.10	10	3	10.5	-	E513M12X1.5NO6
12	1.50	89	22	9.00	7.10	10	3	10.5	-	E513M12X1.5NO7
13	1.50	89	22	9.00	7.10	10	3	11.5	-	E513M13X1.5NO3
14	1.00	95	24	11.20	9.00	12	4	13	-	E513M14X1.0NO1
14	1.00	95	24	11.20	9.00	12	4	13	-	E513M14X1.0NO2
14	1.00	95	24	11.20	9.00	12	4	13	-	E513M14X1.0NO3
14	1.00	95	24	11.20	9.00	12	4	13	-	E513M14X1.0NO7
14	1.25	95	24	11.20	9.00	12	4	12.8	-	E513M14X1.25NO1
14	1.25	95	24	11.20	9.00	12	4	12.8	-	E513M14X1.25NO2
14	1.25	95	24	11.20	9.00	12	4	12.8	-	E513M14X1.25NO3
14	1.25	95	24	11.20	9.00	12	4	12.8	-	E513M14X1.25NO6
14	1.50	95	24	11.20	9.00	12	4	12.5	-	E513M14X1.5NO1
14	1.50	95	24	11.20	9.00	12	4	12.5	-	E513M14X1.5NO2
14	1.50	95	24	11.20	9.00	12	4	12.5	-	E513M14X1.5NO3
14	1.50	95	24	11.20	9.00	12	4	12.5	-	E513M14X1.5NO6
14	1.50	95	24	11.20	9.00	12	4	12.5	-	E513M14X1.5NO7
15	1.50	95	24	11.20	9.00	12	4	13.5	-	E513M15X1.5NO2
15	1.50	95	24	11.20	9.00	12	4	13.5	-	E513M15X1.5NO3
16	1.00	102	24	12.50	10.00	13	4	15	-	E513M16X1.0NO1
16	1.00	102	24	12.50	10.00	13	4	15	-	E513M16X1.0NO2
16	1.00	102	24	12.50	10.00	13	4	15	-	E513M16X1.0NO3
16	1.00	102	24	12.50	10.00	13	4	15	-	E513M16X1.0NO7
16	1.25	102	24	12.50	10.00	13	4	14.8	-	E513M16X1.25NO3
16	1.50	102	24	12.50	10.00	13	4	14.5	-	E513M16X1.5NO1
16	1.50	102	24	12.50	10.00	13	4	14.5	-	E513M16X1.5NO2
16	1.50	102	24	12.50	10.00	13	4	14.5	-	E513M16X1.5NO3
16	1.50	102	24	12.50	10.00	13	4	14.5	-	E513M16X1.5NO6
16	1.50	102	24	12.50	10.00	13	4	14.5	-	E513M16X1.5NO7
18	1.00	112	29	14.00	11.20	14	4	17	-	E513M18X1.0NO1
18	1.00	112	29	14.00	11.20	14	4	17	-	E513M18X1.0NO2
18	1.00	112	29	14.00	11.20	14	4	17	-	E513M18X1.0NO3
18	1.00	112	29	14.00	11.20	14	4	17	-	E513M18X1.0NO7
18	1.50	112	29	14.00	11.20	14	4	16.5	-	E513M18X1.5NO1
18	1.50	112	29	14.00	11.20	14	4	16.5	-	E513M18X1.5NO2
18	1.50	112	29	14.00	11.20	14	4	16.5	-	E513M18X1.5NO3
18	1.50	112	29	14.00	11.20	14	4	16.5	-	E513M18X1.5NO6

NO1 - NO9
219

MF	P mm	l_1 mm	l_2 mm	d_2 Ø mm	a mm	l_3 mm	z	↔	l_4 mm	E513
18	1.50	112	29	14.00	11.20	14	4	16.5	-	E513M18X1.5NO7
18	2.00	112	29	14.00	11.20	14	4	16	-	E513M18X2.0NO1
18	2.00	112	29	14.00	11.20	14	4	16	-	E513M18X2.0NO2
18	2.00	112	29	14.00	11.20	14	4	16	-	E513M18X2.0NO3
18	2.00	112	29	14.00	11.20	14	4	16	-	E513M18X2.0NO7
20	1.00	112	29	14.00	11.20	14	4	19	-	E513M20X1.0NO1
20	1.00	112	29	14.00	11.20	14	4	19	-	E513M20X1.0NO2
20	1.00	112	29	14.00	11.20	14	4	19	-	E513M20X1.0NO3
20	1.00	112	29	14.00	11.20	14	4	19	-	E513M20X1.0NO7
20	1.50	112	29	14.00	11.20	14	4	18.5	-	E513M20X1.5NO1
20	1.50	112	29	14.00	11.20	14	4	18.5	-	E513M20X1.5NO2
20	1.50	112	29	14.00	11.20	14	4	18.5	-	E513M20X1.5NO3
20	1.50	112	29	14.00	11.20	14	4	18.5	-	E513M20X1.5NO6
20	1.50	112	29	14.00	11.20	14	4	18.5	-	E513M20X1.5NO7
20	2.00	112	29	14.00	11.20	14	4	18	-	E513M20X2.0NO1
20	2.00	112	29	14.00	11.20	14	4	18	-	E513M20X2.0NO2
20	2.00	112	29	14.00	11.20	14	4	18	-	E513M20X2.0NO3
20	2.00	112	29	14.00	11.20	14	4	18	-	E513M20X2.0NO7
22	1.00	118	29	16.00	12.50	16	4	21	-	E513M22X1.0NO2
22	1.00	118	29	16.00	12.50	16	4	21	-	E513M22X1.0NO3
22	1.00	118	29	16.00	12.50	16	4	21	-	E513M22X1.0NO7
22	1.50	118	29	16.00	12.50	16	4	20.5	-	E513M22X1.5NO1
22	1.50	118	29	16.00	12.50	16	4	20.5	-	E513M22X1.5NO2
22	1.50	118	29	16.00	12.50	16	4	20.5	-	E513M22X1.5NO3
22	1.50	118	29	16.00	12.50	16	4	20.5	-	E513M22X1.5NO7
22	2.00	118	29	16.00	12.50	16	4	20	-	E513M22X2.0NO1
22	2.00	118	29	16.00	12.50	16	4	20	-	E513M22X2.0NO2
22	2.00	118	29	16.00	12.50	16	4	20	-	E513M22X2.0NO3
22	2.00	118	29	16.00	12.50	16	4	20	-	E513M22X2.0NO7
24	1.00	130	35	18.00	14.00	18	4	23	-	E513M24X1.0NO2
24	1.00	130	35	18.00	14.00	18	4	23	-	E513M24X1.0NO3
24	1.50	130	35	18.00	14.00	18	4	22.5	-	E513M24X1.5NO1
24	1.50	130	35	18.00	14.00	18	4	22.5	-	E513M24X1.5NO2
24	1.50	130	35	18.00	14.00	18	4	22.5	-	E513M24X1.5NO3
24	1.50	130	35	18.00	14.00	18	4	22.5	-	E513M24X1.5NO7
24	2.00	130	35	18.00	14.00	18	4	22	-	E513M24X2.0NO1
24	2.00	130	35	18.00	14.00	18	4	22	-	E513M24X2.0NO2
24	2.00	130	35	18.00	14.00	18	4	22	-	E513M24X2.0NO3
24	2.00	130	35	18.00	14.00	18	4	22	-	E513M24X2.0NO7
25	1.50	130	35	18.00	14.00	18	4	23.5	-	E513M25X1.5NO1
25	1.50	130	35	18.00	14.00	18	4	23.5	-	E513M25X1.5NO2
25	1.50	130	35	18.00	14.00	18	4	23.5	-	E513M25X1.5NO3
25	1.50	130	35	18.00	14.00	18	4	23.5	-	E513M25X1.5NO6
25	1.50	130	35	18.00	14.00	18	4	23.5	-	E513M25X1.5NO7
26	1.50	130	35	18.00	14.00	18	4	24.5	-	E513M26X1.5NO2
26	1.50	130	35	18.00	14.00	18	4	24.5	-	E513M26X1.5NO3
27	1.50	135	35	20.00	16.00	20	4	25.5	-	E513M27X1.5NO2
27	1.50	135	35	20.00	16.00	20	4	25.5	-	E513M27X1.5NO3
27	2.00	135	35	20.00	16.00	20	4	25	-	E513M27X2.0NO3
28	1.50	138	35	20.00	16.00	20	4	26.5	-	E513M28X1.5NO2
28	1.50	138	35	20.00	16.00	20	4	26.5	-	E513M28X1.5NO3
30	1.50	138	41	20.00	16.00	20	4	28.5	-	E513M30X1.5NO2
30	1.50	138	41	20.00	16.00	20	4	28.5	-	E513M30X1.5NO3
30	2.00	138	41	20.00	16.00	20	4	28	-	E513M30X2.0NO2
30	2.00	138	41	20.00	16.00	20	4	28	-	E513M30X2.0NO3
32	1.50	151	41	22.40	18.00	22	4	30.5	-	E513M32X1.5NO1
32	1.50	151	41	22.40	18.00	22	4	30.5	-	E513M32X1.5NO2
32	1.50	151	41	22.40	18.00	22	4	30.5	-	E513M32X1.5NO3
33	2.00	151	41	22.40	18.00	22	4	31	-	E513M33X2.0NO2
33	2.00	151	41	22.40	18.00	22	4	31	-	E513M33X2.0NO3
35	1.50	162	47	25.00	20.00	24	4	33.5	-	E513M35X1.5NO2
35	1.50	162	47	25.00	20.00	24	4	33.5	-	E513M35X1.5NO3
36	1.50	162	47	25.00	20.00	24	4	34.5	-	E513M36X1.5NO3
36	2.00	162	47	25.00	20.00	24	4	34	-	E513M36X2.0NO2
36	2.00	162	47	25.00	20.00	24	4	34	-	E513M36X2.0NO3
36	3.00	162	47	25.00	20.00	24	4	33	-	E513M36X3.0NO2
36	3.00	162	47	25.00	20.00	24	4	33	-	E513M36X3.0NO3
39	3.00	170	47	28.00	22.40	26	4	36	-	E513M39X3.0NO2
39	3.00	170	47	28.00	22.40	26	4	36	-	E513M39X3.0NO3
40	1.50	170	53	28.00	22.40	26	6	38.5	-	E513M40X1.5NO2

NO1 - NO9
219

MF	P mm	l_1 mm	l_2 mm	d_2 Ø mm	◪ a mm	l_3 mm	z	↔	l_4 mm	E513
40	1.50	170	53	28.00	22.40	26	6	38.5	-	E513M40X1.5NO3
42	1.50	170	53	28.00	22.40	26	6	40.5	-	E513M42X1.5NO2
42	1.50	170	53	28.00	22.40	26	6	40.5	-	E513M42X1.5NO3
42	3.00	170	53	28.00	22.40	26	6	39	-	E513M42X3.0NO3
45	1.50	187	54	31.50	25.00	28	6	43.5	-	E513M45X1.5NO2
45	1.50	187	54	31.50	25.00	28	6	43.5	-	E513M45X1.5NO3
48	1.50	187	60	31.50	25.00	28	6	46.5	-	E513M48X1.5NO3
48	2.00	187	60	31.50	25.00	28	6	46	-	E513M48X2.0NO3
48	3.00	187	60	31.50	25.00	28	6	45	-	E513M48X3.0NO3
50	1.50	187	60	31.50	25.00	28	6	48.5	-	E513M50X1.5NO2
50	1.50	187	60	31.50	25.00	28	6	48.5	-	E513M50X1.5NO3

EP10
EP10TIN
EP11

- MF机用螺尖丝锥 — 提供HSS-E,直到库存更新至HSS-E PM
- MF Macho Máquina Ponta Helicoidal — Fornecido em HSS-E até disponibilidade do novo estoque
- MF Machos de máquina Entrada en hélice — Suministrado en HSS-E hasta disponibilidad de nuevo stock
- MF Machine Tap Spiral Point — Supplied in HSS-E until new stock available

EP10	■	1.1 1.2 1.3 1.4 1.5 6.1 6.3 7.1 7.2 7.3 7.4
	•	1.6 3.1 3.2 3.3 3.4 4.1 4.2 5.1 5.2 6.2 8.1
EP10TIN	■	1.1 1.2 1.3 1.4 1.5 2.1 2.2 6.1 6.3 7.3 7.4
	•	1.6 2.3 3.1 3.2 3.3 3.4 4.1 4.2 5.1 5.2 6.2 8.2
EP11	■	1.1 1.2 1.3 1.4 1.5
	•	1.6 2.1 2.2 2.3 3.1 3.2 3.3 3.4

EP10	MF	DIN 374	6H		2.5XD	HSS-E PM	B 3.5-5				
EP10TIN	MF	DIN 374	6H		2.5XD	HSS-E PM	B 3.5-5			TIN	
EP11	MF	DIN 374	6H		2.5XD	HSS-E PM	B 3.5-5			ST	

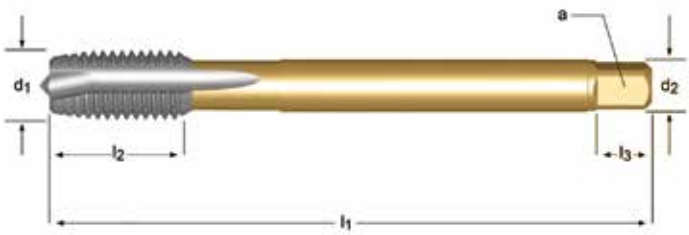

EP10	EP10TIN	EP11
		
M4 - M30	M8 - M20	M4 - M30

MF	P mm	l_1 mm	l_2 mm	d_2 Ø mm	a mm	l_3 mm	z	↔	EP10	EP10TIN	EP11
4	0.50	63	12	2.8	2.1	5	3	3.5	EP10M4X.5		EP11M4X.5
5	0.50	70	13	3.5	2.7	6	3	4.5	EP10M5X.5		EP11M5X.5
6	0.75	80	15	4.5	3.4	6	3	5.3	EP10M6X.75		EP11M6X.75
8	0.75	80	15	6.0	4.9	8	3	7.3	EP10M8X.75		EP11M8X.75
8	1.00	90	18	6.0	4.9	8	3	7	EP10M8X1.0	EP10TINM8X1.0	EP11M8X1.0
10	0.75	90	18	7.0	5.5	8	3	9.3	EP10M10X.75		EP11M10X.75
10	1.00	90	18	7.0	5.5	8	3	9	EP10M10X1.0	EP10TINM10X1.0	EP11M10X1.0
10	1.25	100	20	7.0	5.5	8	3	8.8	EP10M10X1.25	EP10TINM10X1.25	EP11M10X1.25
12	1.00	100	21	9.0	7.0	10	3	11	EP10M12X1.0	EP10TINM12X1.0	EP11M12X1.0
12	1.25	100	21	9.0	7.0	10	3	10.8	EP10M12X1.25	EP10TINM12X1.25	EP11M12X1.25
12	1.50	100	21	9.0	7.0	10	3	10.5	EP10M12X1.5	EP10TINM12X1.5	EP11M12X1.5
14	1.00	100	21	11.0	9.0	12	3	13	EP10M14X1.0		EP11M14X1.0
14	1.25	100	21	11.0	9.0	12	3	13	EP10M14X1.25		EP11M14X1.25
14	1.50	100	21	11.0	9.0	12	3	12.5	EP10M14X1.5	EP10TINM14X1.5	EP11M14X1.5
16	1.00	100	21	12.0	9.0	12	3	15	EP10M16X1.0		EP11M16X1.0
16	1.50	100	21	12.0	9.0	12	3	14.5	EP10M16X1.5	EP10TINM16X1.5	EP11M16X1.5
18	1.00	110	24	14.0	11.0	14	4	17	EP10M18X1.0		EP11M18X1.0
18	1.50	110	24	14.0	11.0	14	4	16.5	EP10M18X1.5	EP10TINM18X1.5	EP11M18X1.5
20	1.00	125	24	16.0	12.0	15	4	19	EP10M20X1.0		EP11M20X1.0
20	1.50	125	24	16.0	12.0	15	4	18.5	EP10M20X1.5	EP10TINM20X1.5	EP11M20X1.5

MF	P mm	l_1 mm	l_2 mm	d_2 Ø mm	a mm	l_3 mm	z		EP10	EP10TIN	EP11
22	1.50	125	25	18.0	14.5	17	4	20.5	EP10M22X1.5		EP11M22X1.5
24	1.50	140	28	18.0	14.5	17	4	22.5	EP10M24X1.5		EP11M24X1.5
24	2.00	140	28	18.0	14.5	17	4	22	EP10M24X2.0		EP11M24X2.0
25	1.50	140	28	18.0	14.5	17	4	23.5	EP10M25X1.5		EP11M25X1.5
26	1.50	140	28	18.0	14.5	17	4	24.5	EP10M26X1.5		EP11M26X1.5
27	1.50	140	28	20.0	16.0	19	4	25.5	EP10M27X1.5		EP11M27X1.5
27	2.00	140	28	20.0	16.0	19	4	25	EP10M27X2.0		EP11M27X2.0
28	1.50	140	28	20.0	16.0	19	4	26.5	EP10M28X1.5		EP11M28X1.5
30	1.50	150	28	22.0	18.0	21	4	28.5	EP10M30X1.5		EP11M30X1.5
30	2.00	150	28	22.0	18.0	21	4	28	EP10M30X2.0		EP11M30X2.0

E299

- MF标准机用螺尖丝锥,黄圈鲨鱼线丝锥
- MF Macho Máquina Ponta Helicoidal , Shark - Anel Amarelo
- MF Macho de máquina con entrada en hélice Shark (Anillo Amarillo)
- MF Machine Tap Spiral Point, Yellow Shark

E299						
	■	1.1	1.2	1.3	6.1	6.3
	•	1.4	1.5	6.2		

E299 MF DIN 374 6H 2.5XD HSS-E PM B 3.5-5 Cr

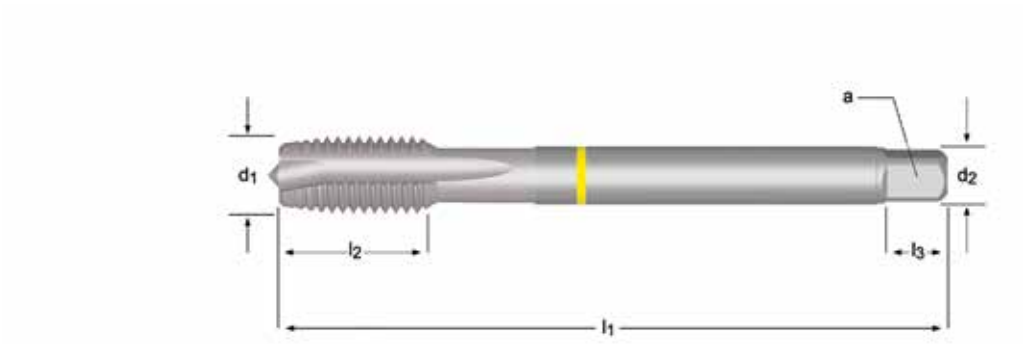

E299

M4 - M30

MF	P mm	l_1 mm	l_2 mm	d_2 Ø mm	a mm	l_3 mm	z	↔	E299
4	0.50	63	12	2.8	2.1	5	3	3.5	E299M4X.5
5	0.50	70	13	3.5	2.7	6	3	4.5	E299M5X.5
6	0.75	80	15	4.5	3.4	6	3	5.3	E299M6X.75
8	0.75	80	15	6.0	4.9	8	3	7.3	E299M8X.75
8	1.00	90	18	6.0	4.9	8	3	7.0	E299M8X1.0
10	0.75	90	20	7.0	5.5	8	3	9.3	E299M10X.75
10	1.00	90	20	7.0	5.5	8	3	9.0	E299M10X1.0
10	1.25	100	20	7.0	5.5	8	3	8.8	E299M10X1.25
12	1.00	100	21	9.0	7.0	10	4	11.0	E299M12X1.0
12	1.25	100	21	9.0	7.0	10	4	10.8	E299M12X1.25
12	1.50	110	21	9.0	7.0	10	4	10.5	E299M12X1.5
14	1.00	100	21	11.0	9.0	12	4	13.0	E299M14X1.0
14	1.25	100	21	11.0	9.0	12	4	12.8	E299M14X1.25
14	1.50	100	21	11.0	9.0	12	4	12.5	E299M14X1.5
16	1.00	100	21	12.0	9.0	12	4	15.0	E299M16X1.0
16	1.50	100	21	12.0	9.0	12	4	14.5	E299M16X1.5
18	1.00	110	24	14.0	11.0	14	4	17.0	E299M18X1.0
18	1.50	110	24	14.0	11.0	14	4	16.5	E299M18X1.5
20	1.50	125	24	16.0	12.0	15	4	18.5	E299M20X1.5
22	1.50	125	25	18.0	14.5	17	4	20.5	E299M22X1.5
24	1.50	140	28	18.0	14.5	17	4	22.5	E299M24X1.5
24	2.00	140	28	18.0	14.5	17	4	22.0	E299M24X2.0
27	2.00	140	28	20.0	16.0	19	4	25.0	E299M27X2.0
30	2.00	150	28	22.0	18.0	21	4	28.0	E299M30X2.0

DORMER

E384

- MF标准机用螺尖丝锥,篮圈鲨鱼线丝锥
- MF Macho Máquina Ponta Helicoidal Shark - Anel Azul
- MF Macho de máquina con entrada en hélice Shark (Anillo Azul)
- MF Machine Tap Spiral Point, Blue Shark

E384 ▪ 2.1 2.2 2.3
• 1.5

E384 MF DIN 374 6H 2.5XD HSS-E PM B 3.5-5 ST

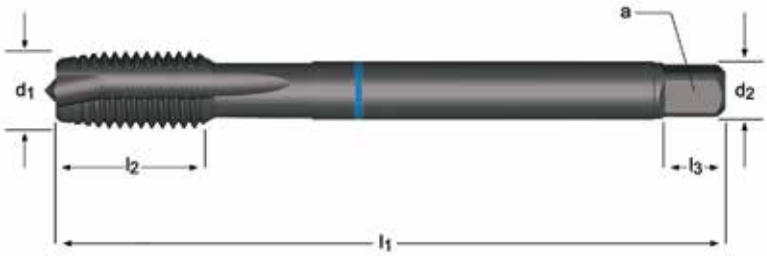

E384

M6 - M20

MF	P mm	l_1 mm	l_2 mm	d_2 Ø mm	◪ a mm	l_3 mm	z	↔	E384
6	0.75	80	15	4.5	3.4	6	3	5.3	E384M6X.75
8	1.00	90	18	6.0	4.9	8	3	7.0	E384M8X1.0
10	1.00	90	20	7.0	5.5	8	3	9.0	E384M10X1.0
10	1.25	100	20	7.0	5.5	8	3	8.8	E384M10X1.25
12	1.00	100	21	9.0	7.0	10	4	11.0	E384M12X1.0
12	1.25	100	21	9.0	7.0	10	4	10.8	E384M12X1.25
12	1.50	100	21	9.0	7.0	10	4	10.5	E384M12X1.5
14	1.50	100	21	11.0	9.0	12	4	12.5	E384M14X1.5
16	1.50	100	21	12.0	9.0	12	5	14.5	E384M16X1.5
18	1.50	110	24	14.0	11.0	14	5	16.5	E384M18X1.5
20	1.50	125	24	16.0	12.0	15	5	18.5	E384M20X1.5

E011

- MF标准机用螺尖丝锥
- MF Macho Máquina Ponta Helicoidal
- MF Machos de máquina Entrada en hélice
- MF Machine Tap Spiral Point

提供HSS-E,直到库存更新至HSS-E PM
Fornecido em HSS-E até disponibilidade do novo estoque
Suministrado en HSS-E hasta disponibilidad de nuevo stock
Supplied in HSS-E until new stock available

E011									
	▪	1.1	1.2	1.3	1.4	1.5			
	•	1.6	2.1	2.2	2.3	3.1	3.2	3.3	3.4

E011 MF ISO 529 6H 2.5XD HSS-E PM B 3.5-5 ST

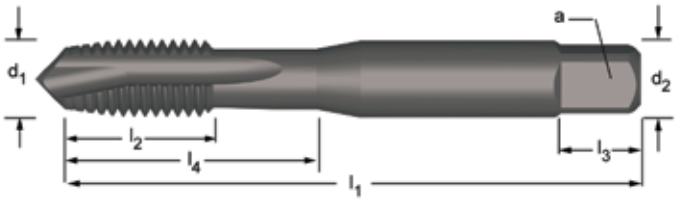

E011

M4 - M24

MF	P mm	l_1 mm	l_2 mm	d_2 Ø mm	a mm	l_3 mm	z		l_4 mm	E011
4	0.50	53	17	4.0	3.15	6	3	3.5	17	E011M4X.5
5	0.50	58	11	5.0	4.00	7	3	4.5	22	E011M5X.5
6	0.50	66	13	6.3	5.00	8	3	5.5	26	E011M6X.5
6	0.75	66	13	6.3	5.00	8	3	5.3	26	E011M6X.75
8	0.75	72	16	8.0	6.30	9	3	7.3	29	E011M8X.75
8	1.00	72	16	8.0	6.30	9	3	7.0	29	E011M8X1.0
10	1.00	80	18	10.0	8.00	11	3	9.0	34	E011M10X1.0
10	1.25	80	18	10.0	8.00	11	3	8.8	34	E011M10X1.25
12	1.00	89	22	9.0	7.10	10	3	11.0	-	E011M12X1.0
12	1.25	89	22	9.0	7.10	10	3	10.8	-	E011M12X1.25
12	1.50	89	22	9.0	7.10	10	3	10.5	-	E011M12X1.5
14	1.00	95	24	11.2	9.00	12	3	13.0	-	E011M14X1.0
14	1.25	95	24	11.2	9.00	12	3	12.8	-	E011M14X1.25
14	1.50	95	24	11.2	9.00	12	3	12.5	-	E011M14X1.5
16	1.00	102	24	12.5	10.00	13	3	15.0	-	E011M16X1.0
16	1.50	102	24	12.5	10.00	13	3	14.5	-	E011M16X1.5
18	1.00	112	29	14.0	11.20	14	4	17.0	-	E011M18X1.0
18	1.50	112	29	14.0	11.20	14	4	16.5	-	E011M18X1.5
20	1.00	112	29	14.0	11.20	14	4	19.0	-	E011M20X1.0
20	1.50	112	29	14.0	11.20	14	4	18.5	-	E011M20X1.5
20	2.00	112	29	14.0	11.20	14	4	18.0	-	E011M20X2.0
22	1.50	118	29	16.0	12.50	16	4	20.5	-	E011M22X1.5
24	1.50	130	35	18.0	14.00	18	4	22.5	-	E011M24X1.5
24	2.00	130	35	18.0	14.00	18	4	22.0	-	E011M24X2.0

EX10
EX10TIN
EX11

- MF 机用45°螺旋槽丝锥
- MF Macho Máquina Canal Helicoidal 45°
- MF Machos de máquina Estrías helicoidales a 45°
- MF Machine Tap Spiral Flute 45°

提供HSS-E,直到库存更新至HSS-E PM

Fornecido em HSS-E até disponibilidade do novo estoque

Suministrado en HSS-E hasta disponibilidad de nuevo stock

Supplied in HSS-E until new stock available

EX10	▪	1.1 1.2 1.3 1.4 1.5 7.1 7.2 7.3 7.4
	•	4.1 4.2 5.1 5.2
EX10TIN	▪	1.1 1.2 1.3 1.4 1.5 2.1 2.2 7.3 7.4
	•	2.3 3.1 3.2 3.3 3.4 4.1 4.2 5.1 5.2
EX11	▪	1.1 1.2 1.3 1.4 1.5 2.1 2.2
	•	2.3

EX10	MF	DIN 374	6H		2.5XD	HSS-E PM	C 2-3	λ45°			
EX10TIN	MF	DIN 374	6H		2.5XD	HSS-E PM	C 2-3	λ45°		TIN	
EX11	MF	DIN 374	6H		2.5XD	HSS-E PM	C 2-3	λ45°		ST	

EX10	EX10TIN	EX11
		
M4 - M30	M8 - M20	M4 - M30

MF	P mm	l_1 mm	l_2 mm	d_2 Ø mm	a mm	l_3 mm	z	↔	EX10	EX10TIN	EX11
4	0.50	63	7	2.8	2.1	5	3	3.5	EX10M4X.50		EX11M4X.50
5	0.50	70	8	3.5	2.7	6	3	4.5	EX10M5X.50		EX11M5X.50
6	0.75	80	10	4.5	3.4	6	3	5.3	EX10M6X.75		EX11M6X.75
8	0.75	80	13	6.0	4.9	8	3	7.3	EX10M8X.75		EX11M8X.75
8	1.00	90	13	6.0	4.9	8	3	7	EX10M8X1.0	EX10TINM8X1.0	EX11M8X1.0
10	0.75	90	13	7.0	5.5	8	3	9.3	EX10M10X.75		EX11M10X.75
10	1.00	90	13	7.0	5.5	8	3	9	EX10M10X1.0	EX10TINM10X1.0	EX11M10X1.0
10	1.25	100	15	7.0	5.5	8	3	8.8	EX10M10X1.25	EX10TINM10X1.25	EX11M10X1.25
12	1.00	100	15	9.0	7.0	10	3	11	EX10M12X1.0	EX10TINM12X1.0	EX11M12X1.0
12	1.25	100	15	9.0	7.0	10	3	10.8	EX10M12X1.25	EX10TINM12X1.25	EX11M12X1.25
12	1.50	100	15	9.0	7.0	10	3	10.5	EX10M12X1.5	EX10TINM12X1.5	EX11M12X1.5
14	1.00	100	15	11.0	9.0	12	3	13	EX10M14X1.0		EX11M14X1.0
14	1.25	100	15	11.0	9.0	12	3	12.8	EX10M14X1.25		EX11M14X1.25
14	1.50	100	15	11.0	9.0	12	3	12.5	EX10M14X1.5	EX10TINM14X1.5	EX11M14X1.5
16	1.00	100	15	12.0	9.0	12	4	15	EX10M16X1.0		EX11M16X1.0
16	1.50	100	15	12.0	9.0	12	4	14.5	EX10M16X1.5	EX10TINM16X1.5	EX11M16X1.5
18	1.00	110	17	14.0	11.0	14	4	17	EX10M18X1.0		EX11M18X1.0
18	1.50	110	17	14.0	11.0	14	4	16.5	EX10M18X1.5	EX10TINM18X1.5	EX11M18X1.5

MF	P mm	l_1 mm	l_2 mm	d_2 Ø mm	⧄ a mm	l_3 mm	z	↔	EX10	EX10TIN	EX11
20	1.00	125	17	16.0	12.0	15	4	19	EX10M20X1.0		EX11M20X1.0
20	1.50	125	17	16.0	12.0	15	4	18.5	EX10M20X1.5	EX10TINM20X1.5	EX11M20X1.5
22	1.50	125	17	18.0	14.5	17	4	20.5	EX10M22X1.5		EX11M22X1.5
24	1.50	140	20	18.0	14.5	17	4	22.5	EX10M24X1.5		EX11M24X1.5
24	2.00	140	20	18.0	14.5	17	4	22	EX10M24X2.0		EX11M24X2.0
25	1.50	140	20	18.0	14.5	17	4	23.5	EX10M25X1.5		EX11M25X1.5
26	1.50	140	20	18.0	14.5	17	4	24.5	EX10M26X1.5		EX11M26X1.5
27	1.50	140	20	20.0	16.0	19	4	25.5	EX10M27X1.5		EX11M27X1.5
27	2.00	140	20	20.0	16.0	19	4	25	EX10M27X2.0		EX11M27X2.0
28	1.50	140	20	20.0	16.0	19	4	26.5	EX10M28X1.5		EX11M28X1.5
30	1.50	150	20	22.0	18.0	21	4	28.5	EX10M30X1.5		EX11M30X1.5
30	2.00	150	20	22.0	18.0	21	4	28	EX10M30X2.0		EX11M30X2.0

DORMER

E300

- MF 机用40°螺旋槽丝锥,黄圈鲨鱼线丝锥
- MF Macho Máquina Canal Helicoidal 40º , Shark - Anel Amarelo
- MF Macho de máquina helicoidal 40º Shark (Anillo Amarillo)
- MF Machine Tap Spiral Flute 40°, Yellow Shark

E300						
	■	1.1	1.2	1.3	6.1	6.3
	•	1.4	1.5	6.2		

E300 MF DIN 374 6H 2XD HSS-E PM C 2-3 λ40° Cr

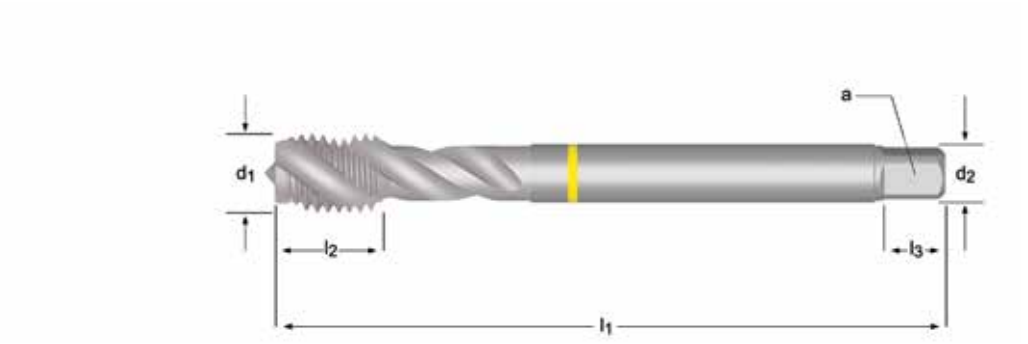

E300

M4 - M30

MF	P mm	l_1 mm	l_2 mm	d_2 Ø mm	⧄ a mm	l_3 mm	z	↔	E300
4	0.50	63	6.5	2.8	2.1	5	3	3.5	E300M4X.5
5	0.50	70	7.5	3.5	2.7	6	3	4.5	E300M5X.5
6	0.75	80	10	4.5	3.4	6	3	5.3	E300M6X.75
8	0.75	80	13	6.0	4.9	8	3	7.3	E300M8X.75
8	1.00	90	13	6.0	4.9	8	3	7.0	E300M8X1.0
10	0.75	90	13	7.0	5.5	8	3	9.3	E300M10X.75
10	1.00	90	12	7.0	5.5	8	3	9.0	E300M10X1.0
10	1.25	100	15	7.0	5.5	8	3	8.8	E300M10X1.25
12	1.00	100	15	9.0	7.0	10	4	11.0	E300M12X1.0
12	1.25	100	13	9.0	7.0	10	4	10.8	E300M12X1.25
12	1.50	100	13	9.0	7.0	10	4	10.5	E300M12X1.5
14	1.00	100	15	11.0	9.0	12	4	13.0	E300M14X1.0
14	1.25	100	15	11.0	9.0	12	4	12.8	E300M14X1.25
14	1.50	100	15	11.0	9.0	12	4	12.5	E300M14X1.5
16	1.00	100	15	12.0	9.0	12	5	15.0	E300M16X1.0
16	1.50	100	15	12.0	9.0	12	5	14.5	E300M16X1.5
18	1.00	110	17	14.0	11.0	14	5	17.0	E300M18X1.0
18	1.50	110	17	14.0	11.0	14	5	16.5	E300M18X1.5
20	1.50	125	17	16.0	12.0	15	5	18.5	E300M20X1.5
22	1.50	125	17	18.0	14.5	17	5	20.5	E300M22X1.5
24	1.50	140	20	18.0	14.5	17	5	22.5	E300M24X1.5
24	2.00	140	20	18.0	14.5	17	5	22.0	E300M24X2.0
27	2.00	140	20	20.0	16.0	19	5	25.0	E300M27X2.0
30	2.00	150	20	22.0	18.0	21	5	28.0	E300M30X2.0

E383

- MF 机用40°螺旋槽丝锥,蓝圈鲨鱼线丝锥
- MF Macho Máquina Canal Helicoidal 40º Shark - Anel Azul
- MF Macho de máquina helicoidal 40º Shark (Anillo Azul)
- MF Machine Tap Spiral Flute 40°, Blue Shark

E383 ▪ 2.1 2.2 2.3
• 1.5

E383 MF | DIN 374 | 6H | 2XD | HSS-E PM | C 2-3 | λ40° | ST

E383

M6 - M20

MF	P mm	l_1 mm	l_2 mm	d_2 Ø mm	⧄ a mm	l_3 mm	z	↔	E383
6	0.75	80	10	4.5	3.4	6	3	5.3	E383M6X.75
8	1.00	90	13	6.0	4.9	8	3	7.0	E383M8X1.0
10	1.00	90	12	7.0	5.5	8	3	9.0	E383M10X1.0
10	1.25	100	15	7.0	5.5	8	3	8.8	E383M10X1.25
12	1.00	100	13	9.0	7.0	10	4	11.0	E383M12X1.0
12	1.25	100	13	9.0	7.0	10	4	10.8	E383M12X1.25
12	1.50	100	13	9.0	7.0	10	4	10.5	E383M12X1.5
14	1.50	100	21	11.0	9.0	12	4	12.5	E383M14X1.5
16	1.50	100	21	12.0	9.0	12	5	14.5	E383M16X1.5
18	1.50	110	24	14.0	11.0	14	5	16.5	E383M18X1.5
20	1.50	125	24	16.0	12.0	15	5	18.5	E383M20X1.5

E013

- MF 机用45°螺旋槽丝锥
- MF Macho Máquina Canal Helicoidal 45°
- MF Machos de máquina Estrías helicoidales a 45°
- MF Machine Tap Spiral Flute 45°

提供HSS-E,直到库存更新至HSS-E PM
Fornecido em HSS-E até disponibilidade do novo estoque
Suministrado en HSS-E hasta disponibilidad de nuevo stock
Supplied in HSS-E until new stock available

E013 ▪ 1.1 1.2 1.3 1.4 1.5
• 2.1 2.2 2.3

E013 MF | ISO 529 | 6H | 2.5XD | HSS-E PM | C 2-3 | λ45° | ST

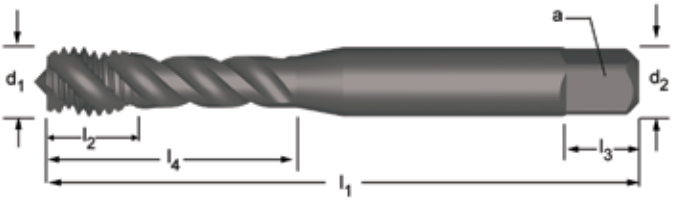

E013

M4 - M22

MF	P mm	l_1 mm	l_2 mm	d_2 Ø mm	a mm	l_3 mm	z	↔	l_4 mm	E013
4	0.50	53	7	4.0	3.15	6	3	3.5	19	E013M4X.5
5	0.50	58	8	5.0	4.0	7	3	4.5	22	E013M5X.5
6	0.50	66	10	6.3	5.0	8	3	5.5	27	E013M6X.5
6	0.75	66	10	6.3	5.0	8	3	5.3	27	E013M6X.75
8	0.75	72	12	8.0	6.3	9	3	7.3	31	E013M8X.75
8	1.00	72	12	8.0	6.3	9	3	7.0	31	E013M8X1.0
10	1.00	80	15	10.0	8.0	11	3	9.0	35	E013M10X1.0
10	1.25	80	15	10.0	8.0	11	3	8.8	35	E013M10X1.25
12	1.00	89	16	9.0	7.1	10	3	11.0	-	E013M12X1.0
12	1.25	89	16	9.0	7.1	10	3	10.8	-	E013M12X1.25
12	1.50	89	16	9.0	7.1	10	3	10.5	-	E013M12X1.5
14	1.50	95	18	11.2	9.0	12	3	12.5	-	E013M14X1.5
16	1.00	102	18	12.5	10.0	13	4	15.0	-	E013M16X1.0
16	1.50	102	18	12.5	10.0	13	4	14.5	-	E013M16X1.5
18	1.50	112	29	14.0	11.2	14	4	16.5	-	E013M18X1.5
20	1.50	112	29	14.0	11.2	14	4	18.5	-	E013M20X1.5
22	1.50	118	29	16.0	12.5	16	4	20.5	-	E013M22X1.5

E288

- MF 机用挤压丝锥
- MF Machos de Máq. De Laminação
- MF Machos de laminación
- MF Machine Forming Tap

E288		
	■	1.1 1.2 1.3 1.4 2.1 2.2 4.1 5.1 7.1 7.2 7.3
	•	1.5 2.3 5.2 6.1 6.3 7.4

E288 MF DIN 2174 6HX 3XD HSS-E C 2-3.5 TiN

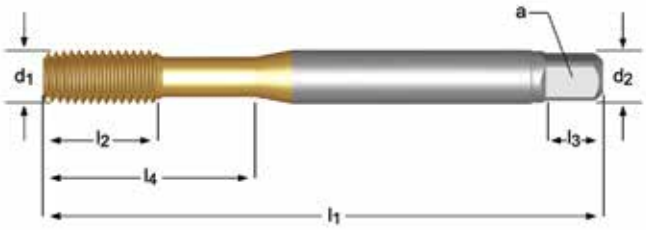

E288

NEW

M5 - M12

MF	P mm	l_1 mm	l_2 mm	d_2 Ø mm	◪ a mm	l_3 mm	z	↔	l_4 mm	E288
5	0.50	70	13	6.0	4.9	8	5	4.8	25	E288M5X.5
6	0.75	80	15	6.0	4.9	8	5	5.7	30	E288M6X.75
8	1.00	90	18	6.0	4.9	8	5	7.5	-	E288M8X1.0
10	1.00	90	20	7.0	5.5	8	5	9.5	-	E288M10X1.0
10	1.25	100	20	7.0	5.5	8	5	9.4	-	E288M10X1.25
12	1.50	100	21	9.0	7.0	10	5	11.3	-	E288M12X1.5

DORMER

E108

- UNC 手用直槽丝锥
- UNC Macho Manual Canal Reto
- UNC Machos de mano Estrías rectas
- UNC Hand Tap Straight Flute

E108 • 1.1 1.2 1.3 1.4 1.5 3.1 3.2 3.3 3.4 6.1 6.2 6.3 6.4 7.2 7.3 7.4 8.2 8.3

E108 UNC DIN 352 2B 1.5XD HSS C 2-3

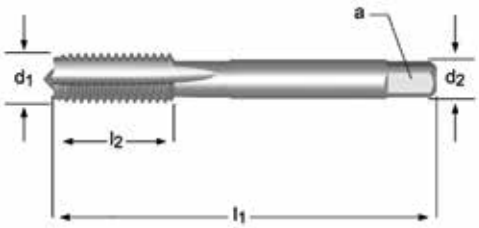

E108

No.5 - 1“

UNC	TPI	d_1 nom mm	l_1 mm	l_2 mm	d_2 Ø mm	a mm	z		E108
5	40	3.18	45	13	4.0	3.0	3	2.65	E1085-40NO3
5	40	3.18	45	13	4.0	3.0	3	2.65	E1085-40NO8
6	32	3.51	45	10	4.0	3.0	3	2.85	E1086-32NO3
6	32	3.51	45	10	4.0	3.0	3	2.85	E1086-32NO8
8	32	4.17	50	14	6.0	4.9	3	3.5	E1088-32NO3
8	32	4.17	50	14	6.0	4.9	3	3.5	E1088-32NO8
10	24	4.83	50	14	6.0	4.9	3	3.9	E10810-24NO3
10	24	4.83	50	14	6.0	4.9	3	3.9	E10810-24NO8
12	24	5.49	56	16	6.0	4.9	3	4.5	E10812-24NO3
12	24	5.49	56	16	6.0	4.9	3	4.5	E10812-24NO8
1/4	20	6.35	56	17	6.0	4.9	3	5.1	E1081/4NO3
1/4	20	6.35	56	17	6.0	4.9	3	5.1	E1081/4NO8
5/16	18	7.94	63	19	6.0	4.9	3	6.6	E1085/16NO3
5/16	18	7.94	63	19	6.0	4.9	3	6.6	E1085/16NO8
3/8	16	9.53	70	22	7.0	5.5	3	8	E1083/8NO3
3/8	16	9.53	70	22	7.0	5.5	3	8	E1083/8NO8
7/16	14	11.11	75	30	8.0	6.2	3	9.4	E1087/16NO3
7/16	14	11.11	75	30	8.0	6.2	3	9.4	E1087/16NO8
1/2	13	12.70	75	27	9.0	7.0	3	10.8	E1081/2NO3
1/2	13	12.70	75	27	9.0	7.0	3	10.8	E1081/2NO8
9/16	12	14.29	80	30	11.0	9.0	4	12.2	E1089/16NO3
9/16	12	14.29	80	30	11.0	9.0	4	12.2	E1089/16NO8
5/8	11	15.88	80	32	12.0	9.0	4	13.5	E1085/8NO3
5/8	11	15.88	80	32	12.0	9.0	4	13.5	E1085/8NO8
3/4	10	19.05	95	34	14.0	11.0	4	16.5	E1083/4NO3
3/4	10	19.05	95	34	14.0	11.0	4	16.5	E1083/4NO8
7/8	9	22.23	110	38	18.0	14.5	4	19.5	E1087/8NO3
7/8	9	22.23	110	38	18.0	14.5	4	19.5	E1087/8NO8
1“	8	25.40	110	38	20.0	16.0	4	22.25	E1081NO8

NO1 - NO9
219

E225
E275

- UNC 机用直槽丝锥
- UNC Macho Máquina Canal Reto
- UNC Machos de máquina Estrías rectas
- UNC Machine Tap Straight Flute

提供HSS-E,直到库存更新至HSS-E PM
Fornecido em HSS-E até disponibilidade do novo estoque
Suministrado en HSS-E hasta disponibilidad de nuevo stock
Supplied in HSS-E until new stock available

E225; E275 • 1.1 1.2 1.3 1.4 1.5 3.1 3.2 3.3 6.2 6.3 7.2 7.3 8.2

E225	UNC	DIN 371	2B		1.5XD	HSS-E PM	C 2-3					
E275	UNC	DIN 376	2B		1.5XD	HSS-E PM	C 2-3					

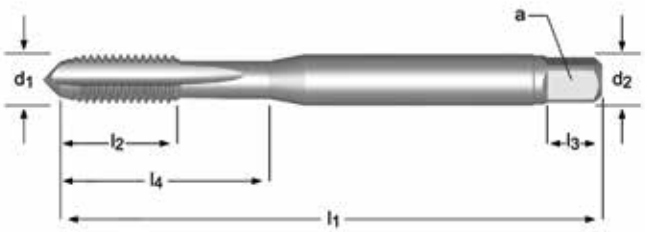

E225	E275
	
No.4 - 1/4	5/16 - 1.1/2

UNC	TPI	d_1 nom mm	l_1 mm	l_2 mm	d_2 Ø mm	a mm	l_3 mm	z	↔	l_4 mm	E225	E275
4	40	2.845	56	9	3.5	2.7	6	3	2.35	18	E2254-40	
5	40	3.175	56	10	3.5	2.7	6	3	2.65	18	E2255-40	
6	32	3.505	56	11	4.0	3.0	6	3	2.85	20	E2256-32	
8	32	4.166	63	12	4.5	3.4	8	3	3.5	21	E2258-32	
10	24	4.826	70	13	6.0	4.9	8	3	3.9	25	E22510-24	
12	24	5.486	80	15	6.0	4.9	8	3	4.5	30	E22512-24	
1/4	20	6.350	80	16	7.0	5.5	8	3	5.1	30	E2251/4	
5/16	18	7.94	90	18	6.0	4.9	8	3	6.6			E2755/16
3/8	16	9.53	100	24	7.0	5.5	8	3	8.0			E2753/8
7/16	14	11.11	110	23	9.0	7.0	10	3	9.4			E2757/16
1/2	13	12.7	110	23	9.0	7.0	10	3	10.8			E2751/2
9/16	12	14.29	110	25	11.0	9.0	12	3	12.2			E2759/16
5/8	11	15.88	110	25	12.0	9.0	12	4	13.5			E2755/8
3/4	10	19.05	140	34	14.0	11.0	14	4	16.5			E2753/4
7/8	9	22.23	140	34	18.0	14.5	17	4	19.5			E2757/8
1“	8	25.40	160	38	20.0	16.0	19	4	22.25			E2751
1.1/8	7	28.58	180	45	22.0	18.0	21	4	25.0			E2751.1/8
1.1/4	7	31.75	180	50	25.0	20.0	23	4	28.0			E2751.1/4
1.1/2	6	38.10	200	60	32.0	24.0	27	4	34.0			E2751.1/2

DORMER

E515

- UNC 手用直槽丝锥
- UNC Macho Máquina Canal Reto
- UNC Machos de máquina Estrías rectas
- UNC Machine Tap Straight Flute

E515 • 1.1 1.2 1.3 1.4 1.5 3.1 3.2 3.3 3.4 6.1 6.2 6.3 6.4 7.2 7.3 7.4 8.2 8.3

E515 UNC ISO 529 2B 1.5XD HSS

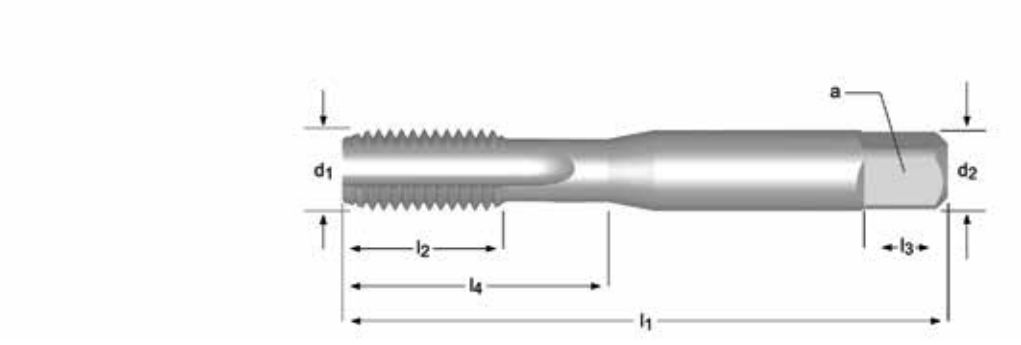

E515

No.1 - 2"

UNC	TPI	d_1 nom mm	l_1 mm	l_2 mm	d_2 Ø mm	a mm	l_3 mm	z	↔	l_4 mm	E515
1	64	1.854	41	8	2.50	2.00	4	2	1.55	8	E5151-64NO1
1	64	1.854	41	8	2.50	2.00	4	2	1.55	8	E5151-64NO2
1	64	1.854	41	8	2.50	2.00	4	2	1.55	8	E5151-64NO3
1	64	1.854	41	8	2.50	2.00	4	2	1.55	8	E5151-64NO6
2	56	2.184	44.5	9.5	2.80	2.24	5	3	1.85	9.5	E5152-56NO1
2	56	2.184	44.5	9.5	2.80	2.24	5	3	1.85	9.5	E5152-56NO2
2	56	2.184	44.5	9.5	2.80	2.24	5	3	1.85	9.5	E5152-56NO3
2	56	2.184	44.5	9.5	2.80	2.24	5	3	1.85	9.5	E5152-56NO6
3	48	2.515	44.5	9.5	2.80	2.24	5	3	2.1	9.5	E5153-48NO1
3	48	2.515	44.5	9.5	2.80	2.24	5	3	2.1	9.5	E5153-48NO2
3	48	2.515	44.5	9.5	2.80	2.24	5	3	2.1	9.5	E5153-48NO3
3	48	2.515	44.5	9.5	2.80	2.24	5	3	2.1	9.5	E5153-48NO6
4	40	2.845	48	12.5	3.15	2.50	5	3	2.35	12.5	E5154-40NO1
4	40	2.845	48	12.5	3.15	2.50	5	3	2.35	12.5	E5154-40NO2
4	40	2.845	48	12.5	3.15	2.50	5	3	2.35	12.5	E5154-40NO3
4	40	2.845	48	12.5	3.15	2.50	5	3	2.35	12.5	E5154-40NO6
5	40	3.175	48	12.5	3.15	2.50	5	3	2.65	12.5	E5155-40NO1
5	40	3.175	48	12.5	3.15	2.50	5	3	2.65	12.5	E5155-40NO2
5	40	3.175	48	12.5	3.15	2.50	5	3	2.65	12.5	E5155-40NO3
5	40	3.175	48	12.5	3.15	2.50	5	3	2.65	12.5	E5155-40NO6
6	32	3.505	50	14	3.55	2.80	5	3	2.85	14	E5156-32NO1
6	32	3.505	50	14	3.55	2.80	5	3	2.85	14	E5156-32NO2
6	32	3.505	50	14	3.55	2.80	5	3	2.85	14	E5156-32NO3
6	32	3.505	50	14	3.55	2.80	5	3	2.85	14	E5156-32NO6
8	32	4.166	53	9.5	4.50	3.55	6	3	3.5	17	E5158-32NO1
8	32	4.166	53	9.5	4.50	3.55	6	3	3.5	17	E5158-32NO2
8	32	4.166	53	9.5	4.50	3.55	6	3	3.5	17	E5158-32NO3
8	32	4.166	53	9.5	4.50	3.55	6	3	3.5	17	E5158-32NO6
10	24	4.826	58	11	5.00	4.00	7	3	3.9	20	E51510-24NO1
10	24	4.826	58	11	5.00	4.00	7	3	3.9	20	E51510-24NO2
10	24	4.826	58	11	5.00	4.00	7	3	3.9	20	E51510-24NO3
10	24	4.826	58	11	5.00	4.00	7	3	3.9	20	E51510-24NO6
12	24	5.486	62	12	5.60	4.50	7	3	4.5	21	E51512-24NO1
12	24	5.486	62	12	5.60	4.50	7	3	4.5	21	E51512-24NO2
12	24	5.486	62	12	5.60	4.50	7	3	4.5	21	E51512-24NO3
12	24	5.486	62	12	5.60	4.50	7	3	4.5	21	E51512-24NO6
1/4	20	6.350	66	13	6.30	5.00	8	3	5.1	26	E5151/4NO1
1/4	20	6.350	66	13	6.30	5.00	8	3	5.1	26	E5151/4NO2
1/4	20	6.350	66	13	6.30	5.00	8	3	5.1	26	E5151/4NO3
1/4	20	6.350	66	13	6.30	5.00	8	3	5.1	26	E5151/4NO6
5/16	18	7.938	72	16	8.00	6.30	9	3	6.6	29	E5155/16NO1
5/16	18	7.938	72	16	8.00	6.30	9	3	6.6	29	E5155/16NO2

NO1 - NO9 219

UNC	TPI	d_1 nom mm	l_1 mm	l_2 mm	d_2 Ø mm	a mm	l_3 mm	z	↔	l_4 mm	E515
5/16	18	7.938	72	16	8.00	6.30	9	3	6.6	29	E5155/16NO3
5/16	18	7.938	72	16	8.00	6.30	9	3	6.6	29	E5155/16NO6
3/8	16	9.525	80	18	10.00	8.00	11	3	8	32	E5153/8NO1
3/8	16	9.525	80	18	10.00	8.00	11	3	8	32	E5153/8NO2
3/8	16	9.525	80	18	10.00	8.00	11	3	8	32	E5153/8NO3
3/8	16	9.525	80	18	10.00	8.00	11	3	8	32	E5153/8NO6
7/16	14	11.112	85	19	8.00	6.30	9	3	9.4	-	E5157/16NO1
7/16	14	11.112	85	19	8.00	6.30	9	3	9.4	-	E5157/16NO2
7/16	14	11.112	85	19	8.00	6.30	9	3	9.4	-	E5157/16NO3
7/16	14	11.112	85	19	8.00	6.30	9	3	9.4	-	E5157/16NO6
1/2	13	12.700	89	22	9.00	7.10	10	3	10.8	-	E5151/2NO1
1/2	13	12.700	89	22	9.00	7.10	10	3	10.8	-	E5151/2NO2
1/2	13	12.700	89	22	9.00	7.10	10	3	10.8	-	E5151/2NO3
1/2	13	12.700	89	22	9.00	7.10	10	3	10.8	-	E5151/2NO6
9/16	12	14.288	95	24	11.20	9.00	12	4	12.2	-	E5159/16NO1
9/16	12	14.288	95	24	11.20	9.00	12	4	12.2	-	E5159/16NO2
9/16	12	14.288	95	24	11.20	9.00	12	4	12.2	-	E5159/16NO3
9/16	12	14.288	95	24	11.20	9.00	12	4	12.2	-	E5159/16NO6
5/8	11	15.875	102	24	12.50	10.00	13	4	13.5	-	E5155/8NO1
5/8	11	15.875	102	24	12.50	10.00	13	4	13.5	-	E5155/8NO2
5/8	11	15.875	102	24	12.50	10.00	13	4	13.5	-	E5155/8NO3
5/8	11	15.875	102	24	12.50	10.00	13	4	13.5	-	E5155/8NO6
3/4	10	19.050	112	29	14.00	11.20	14	4	16.5	-	E5153/4NO1
3/4	10	19.050	112	29	14.00	11.20	14	4	16.5	-	E5153/4NO2
3/4	10	19.050	112	29	14.00	11.20	14	4	16.5	-	E5153/4NO3
3/4	10	19.050	112	29	14.00	11.20	14	4	16.5	-	E5153/4NO6
7/8	9	22.225	118	29	16.00	12.50	16	4	19.5	-	E5157/8NO1
7/8	9	22.225	118	29	16.00	12.50	16	4	19.5	-	E5157/8NO2
7/8	9	22.225	118	29	16.00	12.50	16	4	19.5	-	E5157/8NO3
7/8	9	22.225	118	29	16.00	12.50	16	4	19.5	-	E5157/8NO6
1“	8	25.400	130	35	18.00	14.00	18	4	22.25	-	E5151NO3
1“	8	25.400	130	35	18.00	14.00	18	4	22.25	-	E5151NO1
1“	8	25.400	130	35	18.00	14.00	18	4	22.25	-	E5151NO2
1“	8	25.400	130	35	18.00	14.00	18	4	22.25	-	E5151NO6
1.1/8	7	28.575	138	35	20.00	16.00	20	4	25	-	E5151.1/8NO1
1.1/8	7	28.575	138	35	20.00	16.00	20	4	25	-	E5151.1/8NO2
1.1/8	7	28.575	138	35	20.00	16.00	20	4	25	-	E5151.1/8NO3
1.1/4	7	31.750	151	41	22.40	18.00	22	4	28	-	E5151.1/4NO1
1.1/4	7	31.750	151	41	22.40	18.00	22	4	28	-	E5151.1/4NO2
1.1/4	7	31.750	151	41	22.40	18.00	22	4	28	-	E5151.1/4NO3
1.3/8	6	34.925	162	47	25.00	20.00	24	4	30.75	-	E5151.3/8NO1
1.3/8	6	34.925	162	47	25.00	20.00	24	4	30.75	-	E5151.3/8NO2
1.3/8	6	34.925	162	47	25.00	20.00	24	4	30.75	-	E5151.3/8NO3
1.1/2	6	38.100	170	47	28.00	22.40	26	4	34	-	E5151.1/2NO1
1.1/2	6	38.100	170	47	28.00	22.40	26	4	34	-	E5151.1/2NO2
1.1/2	6	38.100	170	47	28.00	22.40	26	4	34	-	E5151.1/2NO3
1.3/4	5	44.450	187	54	31.50	25.00	28	6	39.5	-	E5151.3/4NO1
1.3/4	5	44.450	187	54	31.50	25.00	28	6	39.5	-	E5151.3/4NO2
1.3/4	5	44.450	187	54	31.50	25.00	28	6	39.5	-	E5151.3/4NO3
2“	4.5	50.800	200	60	35.50	28.00	31	6	45	-	E5152NO3
2“	4.5	50.800	200	60	35.50	28.00	31	6	45	-	E5152NO1
2“	4.5	50.800	200	60	35.50	28.00	31	6	45	-	E5152NO2

EP20
EP21

- UNC 手用螺尖丝锥
- UNC Macho Máquina Ponta Helicoidal
- UNC Machos de máquina Entrada en hélice
- UNC Machine Tap Spiral Point

Do vyprodání skladu dodáváno v HSS-E
Поддерживается в HSS-E до складирования новой продукции
Do wyczerpania obecnych zapasów magazynowych dostepny ze stali HSS-E
Do vypredania skladu dodávané v HSS-E

EP20	▪	1.1	1.2	1.3	1.4	1.5	6.1	6.3	7.1	7.2	7.3	7.4
	•	1.6	3.1	3.2	3.3	3.4	4.1	4.2	5.1	5.2	6.2	8.1
EP21	▪	1.1	1.2	1.3	1.4	1.5						
	•	1.6	2.1	2.2	2.3	3.1	3.2	3.3	3.4			

EP20	UNC	DIN 2184-1	2B		2.5XD	HSS-E PM	B 3.5-5					
EP21	UNC	DIN 2184-1	2B		2.5XD	HSS-E PM	B 3.5-5				ST	

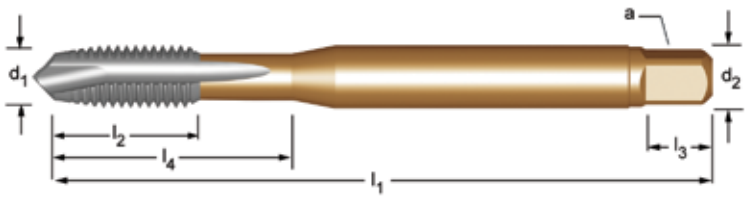

EP20	EP21
	
No.4 - 1“	No.4 - 1“

UNC	TPI	d_1 nom mm	l_1 mm	l_2 mm	d_2 Ø mm	a mm	l_3 mm	z	↔	l_4 mm	EP20	EP21
4	40	2.845	56	9	3.5	2.7	6	3	2.35	18	EP204-40	EP214-40
5	40	3.175	56	10	3.5	2.7	6	3	2.65	18	EP205-40	EP215-40
6	32	3.505	56	11	4.0	3.0	6	3	2.85	20	EP206-32	EP216-32
8	32	4.166	63	12	4.5	3.4	8	3	3.5	21	EP208-32	EP218-32
10	24	4.826	70	13	6.0	4.9	8	3	3.9	25	EP2010-24	EP2110-24
12	24	5.486	80	15	6.0	4.9	8	3	4.5	30	EP2012-24	EP2112-24
1/4	20	6.350	80	15	7.0	5.5	8	3	5.1	30	EP201/4	EP211/4
5/16	18	7.938	90	18	8.0	6.2	9	3	6.6	35	EP205/16	EP215/16
3/8	16	9.525	100	20	10.0	8.0	11	3	8	39	EP203/8	EP213/8
7/16	14	11.112	100	20	8.0	6.2	9	3	9.4	-	EP207/16	EP217/16
1/2	13	12.700	110	23	9.0	7.0	10	3	10.8	-	EP201/2	EP211/2
5/8	11	15.875	110	25	12.0	9.0	12	3	13.5	-	EP205/8	EP215/8
3/4	10	19.050	125	30	14.0	11.0	14	4	16.5	-	EP203/4	EP213/4
7/8	9	22.225	140	34	18.0	14.5	17	4	19.5	-	EP207/8	EP217/8
1“	8	25.400	160	38	18.0	14.5	17	4	22.25	-	EP201	EP211

E021

- UNC 机用螺尖丝锥
- UNC Macho Máquina Ponta Helicoidal
- UNC Machos de máquina Entrada en hélice
- UNC Machine Tap Spiral Point

提供HSS-E,直到库存更新至HSS-E PM
Fornecido em HSS-E até disponibilidade do novo estoque
Suministrado en HSS-E hasta disponibilidad de nuevo stock
Supplied in HSS-E until new stock available

E021								
▪	1.1	1.2	1.3	1.4	1.5			
•	1.6	2.1	2.2	2.3	3.1	3.2	3.3	3.4

E021 UNC | ISO 529 | 2B | 2.5XD | HSS-E PM | B 3.5-5 | ST

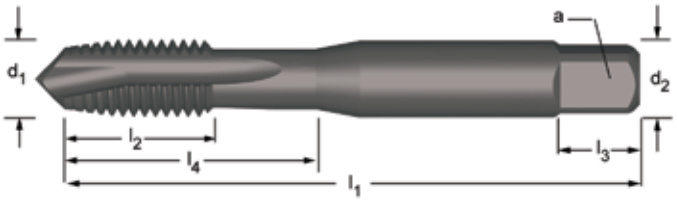

E021

No.2 - 1“

UNC	TPI	d_1 nom mm	l_1 mm	l_2 mm	d_2 Ø mm	◪ a mm	l_3 mm	z	↔	l_4 mm	E021
2	56	2.184	44.5	9.5	2.80	2.24	5	2	1.85	9.5	E0212-56
4	40	2.845	48	14	3.15	2.50	5	3	2.35	14	E0214-40
5	40	3.175	48	12.5	3.15	2.50	5	3	2.65	12.5	E0215-40
6	32	3.505	50	16	3.55	2.80	5	3	2.85	16	E0216-32
8	32	4.166	53	9.5	4.50	3.55	6	3	3.50	17	E0218-32
10	24	4.826	58	11	5.00	4.00	7	3	3.90	20	E02110-24
12	24	5.486	62	12	5.60	4.50	7	3	4.50	21	E02112-24
1/4	20	6.350	66	13	6.30	5.00	8	3	5.10	26	E0211/4
5/16	18	7.938	72	16	8.00	6.30	9	3	6.60	29	E0215/16
3/8	16	9.525	80	18	10.00	8.00	11	3	8.00	32	E0213/8
7/16	14	11.112	85	19	8.00	6.30	9	3	9.40	-	E0217/16
1/2	13	12.700	89	22	9.00	7.10	10	3	10.80	-	E0211/2
5/8	11	15.875	102	24	12.50	10.00	13	3	13.50	-	E0215/8
3/4	10	19.050	112	29	14.00	11.20	14	4	16.50	-	E0213/4
7/8	9	22.225	118	29	16.00	12.50	16	4	19.50	-	E0217/8
1“	8	25.400	130	35	18.00	14.00	18	4	22.25	-	E0211

DORMER

EX20
EX21

- UNC 机用45°螺旋槽丝锥
- UNC Macho Máquina Canal Helicoidal 45°
- UNC Machos de máquina Estrías helicoidales a 45°
- UNC Machine Tap Spiral Flute 45°

提供HSS-E,直到库存更新至HSS-E PM
Fornecido em HSS-E até disponibilidade do novo estoque
Suministrado en HSS-E hasta disponibilidad de nuevo stock
Supplied in HSS-E until new stock available

EX20	▪	1.1 1.2 1.3 1.4 1.5 7.1 7.2 7.3 7.4
	•	4.1 4.2 5.1 5.2
EX21	▪	1.1 1.2 1.3 1.4 1.5 2.1 2.2
	•	2.3

EX20	UNC	DIN 2184-1	2B		2.5XD	HSS-E PM	C 2-3	λ45°			
EX21	UNC	DIN 2184-1	2B		2.5XD	HSS-E PM	C 2-3	λ45°		ST	

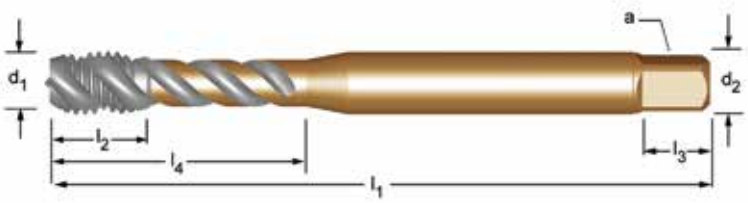

EX20	EX21
	
No.4 - 1“	No.4 - 1“

UNC	TPI	d_1 nom mm	l_1 mm	l_2 mm	d_2 Ø mm	◪ a mm	l_3 mm	z	↔	l_4 mm	EX20	EX21
4	40	2.845	56	6	3.5	2.7	6	3	2.35	18	EX204-40	EX214-40
5	40	3.175	56	6	3.5	2.7	6	3	2.65	18	EX205-40	EX215-40
6	32	3.505	56	7	4.0	3.0	6	3	2.85	20	EX206-32	EX216-32
8	32	4.166	63	7	4.5	3.4	8	3	3.5	21	EX208-32	EX218-32
10	24	4.826	70	8	6.0	4.9	8	3	3.9	25	EX2010-24	EX2110-24
12	24	5.486	80	10	6.0	4.9	8	3	4.5	30	EX2012-24	EX2112-24
1/4	20	6.350	80	10	7.0	5.5	8	3	5.1	30	EX201/4	EX211/4
5/16	18	7.938	90	12	8.0	6.2	9	3	6.6	35	EX205/16	EX215/16
3/8	16	9.525	100	15	10.0	8.0	11	3	8.0	39	EX203/8	EX213/8
7/16	14	11.112	100	15	8.0	6.2	9	3	9.4	-	EX207/16	EX217/16
1/2	13	12.700	110	18	9.0	7.0	10	3	10.8	-	EX201/2	EX211/2
5/8	11	15.875	110	20	12.0	9.0	12	4	13.5	-	EX205/8	EX215/8
3/4	10	19.050	125	25	14.0	11.0	14	4	16.5	-	EX203/4	EX213/4
7/8	9	22.225	140	25	18.0	14.5	17	4	19.5	-	EX207/8	EX217/8
1“	8	25.400	160	30	18.0	14.5	17	4	22.25	-	EX201	EX211

E023

- UNC 机用45°螺旋槽丝锥
- UNC Macho Máquina Canal Helicoidal 45°
- UNC Machos de máquina Estrías helicoidales a 45°
- UNC Machine Tap Spiral Flute 45°

提供HSS-E,直到库存更新至HSS-E PM
Fornecido em HSS-E até disponibilidade do novo estoque
Suministrado en HSS-E hasta disponibilidad de nuevo stock
Supplied in HSS-E until new stock available

E023 ▪ 1.1 1.2 1.3 1.4 1.5
• 2.1 2.2 2.3

E023 UNC | ISO 529 | 2B | 2.5XD | HSS-E PM | C 2-3 | λ45° | ST

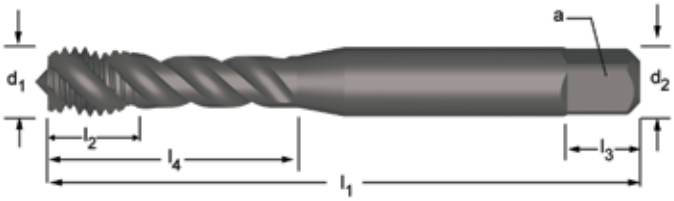

E023

No.2 - 1“

UNC	TPI	d_1 nom mm	l_1 mm	l_2 mm	d_2 Ø mm	a mm	l_3 mm	z	↔	l_4 mm	E023
2	56	2.184	44.5	9.5	2.80	2.24	5	2	1.85	9.5	E0232-56
4	40	2.845	48	6	3.15	2.50	5	3	2.35	14	E0234-40
5	40	3.175	48	6	3.15	2.50	5	3	2.65	12.5	E0235-40
6	32	3.505	50	6	3.55	2.80	5	3	2.85	16	E0236-32
8	32	4.166	53	7	4.50	3.55	6	3	3.50	17	E0238-32
10	24	4.826	58	8	5.00	4.00	7	3	3.90	20	E02310-24
12	24	5.486	62	12	5.60	4.50	7	3	4.50	21	E02312-24
1/4	20	6.350	66	10	6.30	5.00	8	3	5.10	28	E0231/4
5/16	18	7.938	72	12	8.00	6.30	9	3	6.60	31	E0235/16
3/8	16	9.525	80	15	10.00	8.00	11	3	8.00	34	E0233/8
7/16	14	11.112	85	19	8.00	6.30	9	3	9.40	-	E0237/16
1/2	13	12.700	89	19	9.00	7.10	10	3	10.80	-	E0231/2
5/8	11	15.875	102	24	12.50	10.00	13	4	13.50	-	E0235/8
3/4	10	19.050	112	29	14.00	11.20	14	4	16.50	-	E0233/4
7/8	9	22.225	118	29	16.00	12.50	16	4	19.50	-	E0237/8
1“	8	25.400	130	35	18.00	14.00	18	4	22.25	-	E0231

E651

- UNC 机用30°螺旋槽钻攻复合丝锥
- UNC Broca-Macho Canal Helicoidal 30°
- UNC Combinación broca-macho Estrías helicoidales a 30°
- UNC Combi Taps Spiral Flute 30°

E651 • 1.1 1.2 1.3 1.4 3.2 6.2 6.3 7.1 7.2 8.1

E651 UNC | DORMER DIN | 2B | 1.5XD | HSS | C 2-3 | λ30° | ST

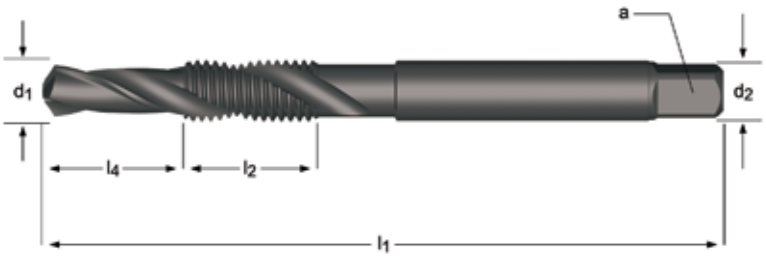

E651

No.6 - 5/8

UNC	TPI	d_1 nom mm	l_1 mm	l_2 mm	l_4 mm	d_2 Ø mm	◪ a mm	z	E651
6	32	2.85	56.9	12	6.0	3.50	2.90	2	E6516-32
8	32	3.50	64.0	12	8.0	4.50	3.55	2	E6518-32
10	24	3.90	72.0	15	10.0	5.00	4.00	2	E65110-24
12	24	4.50	77.0	15	11.0	5.60	4.50	2	E65112-24
1/4	20	5.10	83.0	17	13.0	6.30	5.00	2	E6511/4
5/16	18	6.60	94.0	21	16.0	8.00	6.30	2	E6515/16
3/8	16	8.00	107.0	23	19.0	10.00	8.00	2	E6513/8
7/16	14	9.40	107.0	25	22.0	8.00	6.30	2	E6517/16
1/2	13	10.80	114.0	29	25.0	9.00	7.10	2	E6511/2
9/16	12	12.20	124.0	29	28.0	11.20	9.00	2	E6519/16
5/8	11	13.50	134.0	31	32.5	12.50	10.00	2	E6515/8

E287

- UNC 机用挤压丝锥,带油槽
- UNC Macho Máquina de Laminação com ranhuras para Lubrificação
- UNC Machos de laminación, con ranuras de lubrificación
- UNC Machine Forming Tap, Oil Grooves

E287	▪	1.1 1.2 1.3 1.4 2.1 2.2 4.1 5.1 7.1 7.2 7.3
	•	1.5 2.3 5.2 6.1 6.3 7.4

E287 UNC DIN 2184-1 2BX 3.5XD HSS-E C 2-3.5 TiN

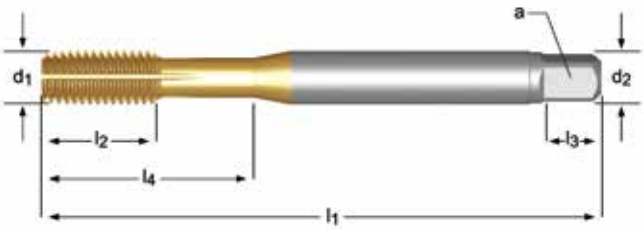

E287

No.4 - 1/2

M	TPI	d_1 nom mm	l_1 mm	l_2 mm	d_2 Ø mm	a mm	l_3 mm	z		l_4 mm	E287
4	40	2.845	56	9	3.5	2.7	6	4	2.6	18	E2874-40
6	32	3.505	56	11	4.0	3.0	6	4	3.2	20	E2876-32
8	32	4.166	63	12	4.5	3.4	6	5	3.8	21	E2878-32
10	24	4.826	70	13	6.0	4.9	8	5	4.4	25	E28710-24
1/4	20	6.350	80	15	7.0	5.5	8	5	5.8	30	E2871/4
5/16	18	7.938	90	18	8.0	6.2	9	5	7.3	35	E2875/16
3/8	16	9.525	100	20	10.0	8.0	11	5	8.8	39	E2873/8
7/16	14	11.112	100	20	8.0	6.2	9	5	10.3	-	E2877/16
1/2	13	12.700	110	23	9.0	7.0	10	5	11.9	-	E2871/2

E111

- UNF 手用直槽丝锥
- UNF Macho Manual Canal Reto
- UNF Machos de mano Estrías rectas
- UNF Hand Tap Straight Flute

E111 • 1.1 1.2 1.3 1.4 1.5 3.1 3.2 3.3 3.4 6.1 6.2 6.3 6.4 7.2 7.3 7.4 8.2 8.3

E111 UNF DIN 2181 2B 1.5XD HSS C 2-3

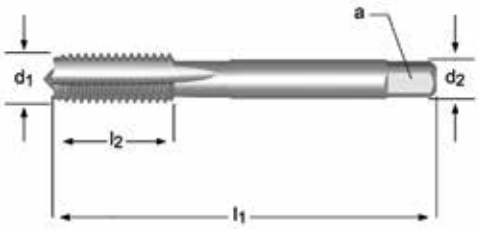

E111

No.5 - 1“

UNF	TPI	d_1 nom mm	l_1 mm	l_2 mm	d_2 Ø mm	a mm	z		E111
5	44	3.18	45	13	4.0	3.0	3	2.7	E1115-44NO3
5	44	3.18	45	13	4.0	3.0	3	2.7	E1115-44NO9
6	40	3.51	45	10	4.0	3.0	3	2.95	E1116-40NO3
6	40	3.51	45	10	4.0	3.0	3	2.95	E1116-40NO9
8	36	4.17	50	14	6.0	4.9	3	3.5	E1118-36NO3
8	36	4.17	50	14	6.0	4.9	3	3.5	E1118-36NO9
10	32	4.82	50	14	6.0	4.9	3	4.1	E11110-32NO3
10	32	4.82	50	14	6.0	4.9	3	4.1	E11110-32NO9
1/4	28	6.35	56	17	6.0	4.9	3	5.5	E1111/4NO3
1/4	28	6.35	56	17	6.0	4.9	3	5.5	E1111/4NO9
5/16	24	7.94	63	19	6.0	4.9	3	6.9	E1115/16NO3
5/16	24	7.94	63	19	6.0	4.9	3	6.9	E1115/16NO9
3/8	24	9.53	63	16	7.0	5.5	3	8.5	E1113/8NO3
3/8	24	9.53	63	16	7.0	5.5	3	8.5	E1113/8NO9
7/16	20	11.11	63	15	8.0	6.2	3	9.9	E1117/16NO3
7/16	20	11.11	63	15	8.0	6.2	3	9.9	E1117/16NO9
1/2	20	12.70	70	22	9.0	7.0	3	11.5	E1111/2NO3
1/2	20	12.70	70	22	9.0	7.0	3	11.5	E1111/2NO9
9/16	18	14.29	70	16	11.0	9.0	4	12.9	E1119/16NO3
9/16	18	14.29	70	16	11.0	9.0	4	12.9	E1119/16NO9
5/8	18	15.88	70	16	12.0	9.0	4	14.5	E1115/8NO3
5/8	18	15.88	70	16	12.0	9.0	4	14.5	E1115/8NO9
3/4	16	19.05	80	22	14.0	11.0	4	17.5	E1113/4NO3
3/4	16	19.05	80	22	14.0	11.0	4	17.5	E1113/4NO9
7/8	14	22.23	90	22	18.0	14.5	4	20.4	E1117/8NO3
7/8	14	22.23	90	22	18.0	14.5	4	20.4	E1117/8NO9
1“	12	25.40	90	22	20.0	16.0	4	23.25	E1111NO3
1“	12	25.40	90	22	20.0	16.0	4	23.25	E1111NO9

NO1 - NO9
219

E229
E278

- UNF 机用直槽丝锥
- UNF Macho Máquina Canal Reto
- UNF Machos de máquina Estrías rectas
- UNF Machine Tap Straight Flute

提供HSS-E,直到库存更新至HSS-E PM
Fornecido em HSS-E até disponibilidade do novo estoque
Suministrado en HSS-E hasta disponibilidad de nuevo stock
Supplied in HSS-E until new stock available

E229; E278 • 1.1 1.2 1.3 1.4 1.5 3.1 3.2 3.3 6.2 6.3 7.2 7.3 8.2

E229	UNF	DIN 371	2B		1.5XD	HSS-E PM	C 2-3				
E278	UNF	DIN 374	2B		1.5XD	HSS-E PM	C 2-3				

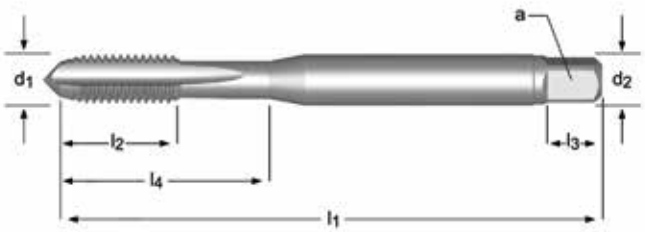

E229	E278
	
No.2 - 1/4	5/16 - 1.1/2

UNF	TPI	d_1 nom mm	l_1 mm	l_2 mm	d_2 Ø mm	a mm	l_3 mm	z	↔	l_4 mm	E229	E278
2	64	2.184	45	7	2.8	2.1	5	3	1.9	12	E2292-64	
3	56	2.515	50	8	2.8	2.1	5	3	2.15	12.5	E2293-56	
4	48	2.845	56	9	3.5	2.7	6	3	2.4	18	E2294-48	
5	44	3.175	56	10	3.5	2.7	6	3	2.7	18	E2295-44	
6	40	3.505	56	11	4.0	3.0	6	3	2.95	20	E2296-40	
8	36	4.166	63	12	4.5	3.4	6	3	3.5	21	E2298-36	
10	32	4.826	70	13	6.0	4.9	8	3	4.1	25	E22910-32	
12	28	5.486	80	15	6.0	4.9	8	3	4.7	30	E22912-28	
1/4	28	6.350	80	15	7.0	5.5	8	3	5.5	30	E2291/4	
5/16	24	7.94	90	18	6.0	4.9	8	3	6.9			E2785/16
3/8	24	9.53	100	24	7.0	5.5	8	3	8.5			E2783/8
7/16	20	11.11	100	22	9.0	7.0	10	3	9.9			E2787/16
1/2	20	12.70	100	21	9.0	7.0	10	3	11.5			E2781/2
9/16	18	14.29	100	21	11.0	9.0	12	4	12.9			E2789/16
5/8	18	15.88	100	21	12.0	9.0	12	4	14.5			E2785/8
3/4	16	19.05	125	25	14.0	11.0	14	4	17.5			E2783/4
7/8	14	22.23	140	28	18.0	14.5	17	4	20.4			E2787/8
1“	12	25.40	140	26	18.0	14.5	17	4	23.25			E2781
1.1/8	12	28.58	150	28	22.0	18.0	21	4	26.5			E2781.1/8
1.1/4	12	31.75	150	28	25.0	20.0	23	4	29.5			E2781.1/4
1.3/8	12	34.93	170	30	28.0	22.0	25	4	32.75			E2781.3/8
1.1/2	12	38.10	170	30	32.0	24.0	27	4	36.0			E2781.1/2 [1]

[1] HSS-E

E524

- UNF 机用直槽丝锥
- UNF Macho Máquina Canal Reto
- UNF Machos de máquina Estrías rectas
- UNF Machine Tap Straight Flute

E524	•	1.1	1.2	1.3	1.4	1.5	3.1	3.2	3.3	3.4	6.1	6.2	6.3	6.4	7.2	7.3	7.4	8.2	8.3

E524 UNF ISO 529 2B 1.5XD HSS L120 339

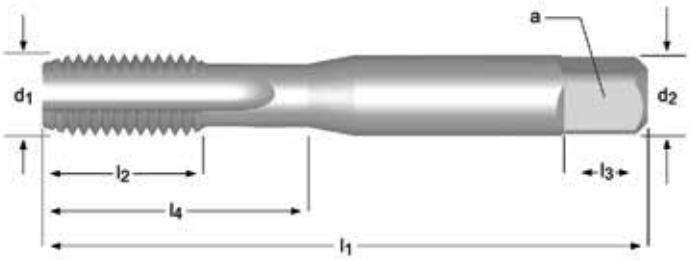

E524

No.0 - 1.1/2

UNF	TPI	d_1 nom mm	l_1 mm	l_2 mm	d_2 Ø mm	a mm	l_3 mm	z		l_4 mm	E524
0	80	1.524	41	7	2.50	2.00	4	2	1.25	7	E5240-80NO1
0	80	1.524	41	7	2.50	2.00	4	2	1.25	7	E5240-80NO2
0	80	1.524	41	7	2.50	2.00	4	2	1.25	7	E5240-80NO3
1	72	1.854	41	8	2.50	2.00	4	2	1.55	8	E5241-72NO1
1	72	1.854	41	8	2.50	2.00	4	2	1.55	8	E5241-72NO2
1	72	1.854	41	8	2.50	2.00	4	2	1.55	8	E5241-72NO3
2	64	2.184	44.5	9.5	2.80	2.24	5	3	1.9	9.5	E5242-64NO1
2	64	2.184	44.5	9.5	2.80	2.24	5	3	1.9	9.5	E5242-64NO2
2	64	2.184	44.5	9.5	2.80	2.24	5	3	1.9	9.5	E5242-64NO3
4	48	2.845	48	12.5	3.15	2.50	5	3	2.4	12.5	E5244-48NO1
4	48	2.845	48	12.5	3.15	2.50	5	3	2.4	12.5	E5244-48NO2
4	48	2.845	48	12.5	3.15	2.50	5	3	2.4	12.5	E5244-48NO3
5	44	3.175	48	12.5	3.15	2.50	5	3	2.7	12.5	E5245-44NO1
5	44	3.175	48	12.5	3.15	2.50	5	3	2.7	12.5	E5245-44NO2
5	44	3.175	48	12.5	3.15	2.50	5	3	2.7	12.5	E5245-44NO3
6	40	3.505	50	14	3.55	2.80	5	3	2.95	14	E5246-40NO1
6	40	3.505	50	14	3.55	2.80	5	3	2.95	14	E5246-40NO2
6	40	3.505	50	14	3.55	2.80	5	3	2.95	14	E5246-40NO3
8	36	4.166	53	9.5	4.50	3.55	6	3	3.5	17	E5248-36NO1
8	36	4.166	53	9.5	4.50	3.55	6	3	3.5	17	E5248-36NO2
8	36	4.166	53	9.5	4.50	3.55	6	3	3.5	17	E5248-36NO3
10	32	4.826	58	11	5.00	4.00	7	3	4.1	20	E52410-32NO1
10	32	4.826	58	11	5.00	4.00	7	3	4.1	20	E52410-32NO2
10	32	4.826	58	11	5.00	4.00	7	3	4.1	20	E52410-32NO3
10	32	4.826	58	11	5.00	4.00	7	3	4.1	20	E52410-32NO6
12	28	5.486	62	12	5.60	4.50	7	3	4.7	21	E52412-28NO1
12	28	5.486	62	12	5.60	4.50	7	3	4.7	21	E52412-28NO2
12	28	5.486	62	12	5.60	4.50	7	3	4.7	21	E52412-28NO3
12	28	5.486	62	12	5.60	4.50	7	3	4.7	21	E52412-28NO6
1/4	28	6.350	66	13	6.30	5.00	8	3	5.5	26	E5241/4NO1
1/4	28	6.350	66	13	6.30	5.00	8	3	5.5	26	E5241/4NO2
1/4	28	6.350	66	13	6.30	5.00	8	3	5.5	26	E5241/4NO3
1/4	28	6.350	66	13	6.30	5.00	8	3	5.5	26	E5241/4NO6
5/16	24	7.938	72	16	8.00	6.30	9	3	6.9	29	E5245/16NO1
5/16	24	7.938	72	16	8.00	6.30	9	3	6.9	29	E5245/16NO2
5/16	24	7.938	72	16	8.00	6.30	9	3	6.9	29	E5245/16NO3
5/16	24	7.938	72	16	8.00	6.30	9	3	6.9	29	E5245/16NO6
3/8	24	9.525	80	18	10.00	8.00	11	3	8.5	32	E5243/8NO1
3/8	24	9.525	80	18	10.00	8.00	11	3	8.5	32	E5243/8NO2
3/8	24	9.525	80	18	10.00	8.00	11	3	8.5	32	E5243/8NO3

NO1 - NO9 219

UNF	TPI	d_1 nom mm	l_1 mm	l_2 mm	d_2 Ø mm	⧄ a mm	l_3 mm	z	↔	l_4 mm	E524
3/8	24	9.525	80	18	10.00	8.00	11	3	8.5	32	E5243/8NO6
7/16	20	11.112	85	19	8.00	6.30	9	3	9.9	-	E5247/16NO1
7/16	20	11.112	85	19	8.00	6.30	9	3	9.9	-	E5247/16NO2
7/16	20	11.112	85	19	8.00	6.30	9	3	9.9	-	E5247/16NO3
7/16	20	11.112	85	19	8.00	6.30	9	3	9.9	-	E5247/16NO6
1/2	20	12.700	89	22	9.00	7.10	10	3	11.5	-	E5241/2NO1
1/2	20	12.700	89	22	9.00	7.10	10	3	11.5	-	E5241/2NO2
1/2	20	12.700	89	22	9.00	7.10	10	3	11.5	-	E5241/2NO3
1/2	20	12.700	89	22	9.00	7.10	10	3	11.5	-	E5241/2NO6
9/16	18	14.288	95	24	11.20	9.00	12	4	12.9	-	E5249/16NO1
9/16	18	14.288	95	24	11.20	9.00	12	4	12.9	-	E5249/16NO2
9/16	18	14.288	95	24	11.20	9.00	12	4	12.9	-	E5249/16NO3
9/16	18	14.288	95	24	11.20	9.00	12	4	12.9	-	E5249/16NO6
5/8	18	15.875	102	24	12.50	10.00	13	4	14.5	-	E5245/8NO1
5/8	18	15.875	102	24	12.50	10.00	13	4	14.5	-	E5245/8NO2
5/8	18	15.875	102	24	12.50	10.00	13	4	14.5	-	E5245/8NO3
5/8	18	15.875	102	24	12.50	10.00	13	4	14.5	-	E5245/8NO6
3/4	16	19.050	112	29	14.00	11.20	14	4	17.5	-	E5243/4NO1
3/4	16	19.050	112	29	14.00	11.20	14	4	17.5	-	E5243/4NO2
3/4	16	19.050	112	29	14.00	11.20	14	4	17.5	-	E5243/4NO3
3/4	16	19.050	112	29	14.00	11.20	14	4	17.5	-	E5243/4NO6
7/8	14	22.225	118	29	16.00	12.50	16	4	20.4	-	E5247/8NO1
7/8	14	22.225	118	29	16.00	12.50	16	4	20.4	-	E5247/8NO2
7/8	14	22.225	118	29	16.00	12.50	16	4	20.4	-	E5247/8NO3
7/8	14	22.225	118	29	16.00	12.50	16	4	20.4	-	E5247/8NO6
1“	12	25.400	130	35	18.00	14.00	18	4	23.25	-	E5241NO1
1“	12	25.400	130	35	18.00	14.00	18	4	23.25	-	E5241NO2
1“	12	25.400	130	35	18.00	14.00	18	4	23.25	-	E5241NO3
1“	12	25.400	130	35	18.00	14.00	18	4	23.25	-	E5241NO6
1.1/8	12	28.575	138	35	20.00	16.00	20	4	26.5	-	E5241.1/8NO1
1.1/8	12	28.575	138	35	20.00	16.00	20	4	26.5	-	E5241.1/8NO2
1.1/8	12	28.575	138	35	20.00	16.00	20	4	26.5	-	E5241.1/8NO3
1.1/4	12	31.750	151	41	22.40	18.00	22	4	29.5	-	E5241.1/4NO1
1.1/4	12	31.750	151	41	22.40	18.00	22	4	29.5	-	E5241.1/4NO2
1.1/4	12	31.750	151	41	22.40	18.00	22	4	29.5	-	E5241.1/4NO3
1.3/8	12	34.925	162	47	25.00	20.00	24	4	32.75	-	E5241.3/8NO1
1.3/8	12	34.925	162	47	25.00	20.00	24	4	32.75	-	E5241.3/8NO2
1.3/8	12	34.925	162	47	25.00	20.00	24	4	32.75	-	E5241.3/8NO3
1.1/2	12	38.100	170	47	28.00	22.40	26	4	36	-	E5241.1/2NO1
1.1/2	12	38.100	170	47	28.00	22.40	26	4	36	-	E5241.1/2NO2
1.1/2	12	38.100	170	47	28.00	22.40	26	4	36	-	E5241.1/2NO3

NO1 - NO9
219

EP30
EP31

- UNF 机用螺尖丝锥
- UNF Macho Máquina Ponta Helicoidal
- UNF Machines de máquina Entrada en hélice
- UNF Machine Tap Spiral Point

提供HSS-E,直到库存更新至HSS-E PM
Fornecido em HSS-E até disponibilidade do novo estoque
Suministrado en HSS-E hasta disponibilidad de nuevo stock
Supplied in HSS-E until new stock available

EP30	▪	1.1	1.2	1.3	1.4	1.5	6.1	6.3	7.1	7.2	7.3	7.4
	•	1.6	3.1	3.2	3.3	3.4	4.1	4.2	5.1	5.2	6.2	8.1
EP31	▪	1.1	1.2	1.3	1.4	1.5						
	•	1.6	2.1	2.2	2.3	3.1	3.2	3.3	3.4			

EP30	UNF	DIN 2184-1	2B		2.5XD	HSS-E PM	C 2-3					
EP31	UNF	DIN 2184-1	2B		2.5XD	HSS-E PM	C 2-3				ST	

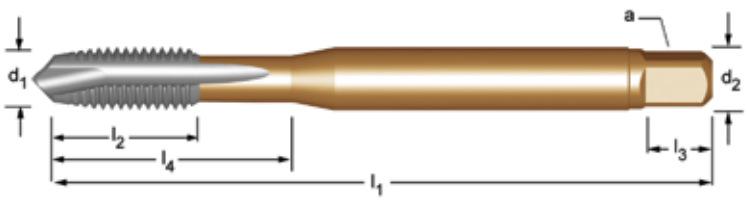

EP30	EP31
	
No.8 - 1“	No.8 - 1“

UNF	TPI	d_1 nom mm	l_1 mm	l_2 mm	d_2 Ø mm	a mm	l_3 mm	z	↔	l_4 mm	EP30	EP31
8	36	4.166	63	12	4.5	3.4	8	3	3.5	21	EP308-36	EP318-36
10	32	4.826	70	13	6.0	4.9	8	3	4.1	25	EP3010-32	EP3110-32
1/4	28	6.350	80	15	7.0	5.5	8	3	5.5	30	EP301/4	EP311/4
5/16	24	7.938	90	18	8.0	6.2	9	3	6.9	35	EP305/16	EP315/16
3/8	24	9.525	100	20	10.0	8.0	11	3	8.5	39	EP303/8	EP313/8
7/16	20	11.112	100	20	8.0	6.2	9	3	9.9	-	EP307/16	EP317/16
1/2	20	12.700	110	23	9.0	7.0	10	3	11.5	-	EP301/2	EP311/2
5/8	18	15.875	110	25	12.0	9.0	12	3	14.5	-	EP305/8	EP315/8
3/4	16	19.050	125	30	14.0	11.0	14	4	17.5	-	EP303/4	EP313/4
7/8	14	22.225	140	34	18.0	14.5	17	4	20.4	-	EP307/8	EP317/8
1“	12	25.400	160	38	18.0	14.5	17	4	23.25	-	EP301	EP311

E031

- UNF 机用螺尖丝锥
- UNF Macho Máquina Ponta Helicoidal
- UNF Machos de máquina Entrada en hélice
- UNF Machine Tap Spiral Point

提供HSS-E,直到库存更新至HSS-E PM
Fornecido em HSS-E até disponibilidade do novo estoque
Suministrado en HSS-E hasta disponibilidad de nuevo stock
Supplied in HSS-E until new stock available

E031 ▪ 1.1 1.2 1.3 1.4 1.5
• 1.6 2.1 2.2 2.3 3.1 3.2 3.3 3.4

E031 UNF | ISO 529 | 2B | 2.5XD | HSS-E PM | B 3.5-5 | ST

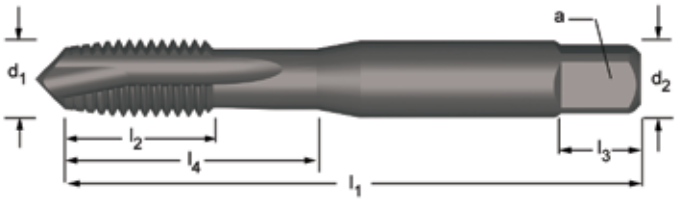

E031

No.8 - 1“

UNF	TPI	d_1 nom mm	l_1 mm	l_2 mm	d_2 Ø mm	◪ a mm	l_3 mm	z	↔	l_4 mm	E031
8	36	4.166	53	9.5	4.5	3.55	6	3	3.50	17	E0318-36
10	32	4.826	58	11	5.0	4.00	7	3	4.10	20	E03110-32
1/4	28	6.350	66	13	6.3	5.00	8	3	5.50	26	E0311/4
5/16	24	7.938	72	16	8.0	6.30	9	3	6.90	29	E0315/16
3/8	24	9.525	80	18	10.0	8.00	11	3	8.50	32	E0313/8
7/16	20	11.112	85	19	8.0	6.30	9	3	9.90	-	E0317/16
1/2	20	12.700	89	22	9.0	7.10	10	3	11.50	-	E0311/2
9/16	18	14.288	95	24	11.2	9.00	12	3	12.90	-	E0319/16
5/8	18	15.875	102	24	12.5	10.00	13	3	14.50	-	E0315/8
3/4	16	19.050	112	29	14.0	11.20	14	4	17.50	-	E0313/4
7/8	14	22.225	118	29	16.0	12.50	16	4	20.40	-	E0317/8
1“	12	25.400	130	35	18.0	14.00	18	4	23.25	-	E0311

DORMER

EX30
EX31

- UNF 机用45°螺旋槽丝锥
- UNF Macho Máquina Canal Helicoidal 45°
- UNF Machos de máquina Estrías helicoidales a 45°
- UNF Machine Tap Spiral Flute 45°

提供HSS-E,直到库存更新至HSS-E PM
Fornecido em HSS-E até disponibilidade do novo estoque
Suministrado en HSS-E hasta disponibilidad de nuevo stock
Supplied in HSS-E until new stock available

EX30	▪	1.1 1.2 1.3 1.4 1.5 7.1 7.2 7.3 7.4
	•	4.1 4.2 5.1 5.2
EX31	▪	1.1 1.2 1.3 1.4 1.5 2.1 2.2
	•	2.3

EX30	UNF	DIN 2184-1	2B		2.5XD	HSS-E PM	C 2-3	λ45°			
EX31	UNF	DIN 2184-1	2B		2.5XD	HSS-E PM	C 2-3	λ45°		ST	

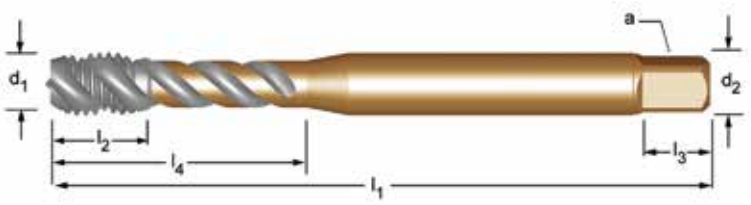

EX30	EX31
	
No.8 - 1“	No.8 - 1“

UNF	TPI	d_1 nom mm	l_1 mm	l_2 mm	d_2 Ø mm	a mm	l_3 mm	z	↔	l_4 mm	EX30	EX31
8	36	4.166	63	7	4.5	3.4	8	3	3.5	21	EX308-36	EX318-36
10	32	4.826	70	8	6.0	4.9	8	3	4.1	25	EX3010-32	EX3110-32
1/4	28	6.350	80	10	7.0	5.5	8	3	5.5	30	EX301/4	EX311/4
5/16	24	7.938	90	12	8.0	6.2	9	3	6.9	35	EX305/16	EX315/16
3/8	24	9.525	100	15	10.0	8.0	11	3	8.5	39	EX303/8	EX313/8
7/16	20	11.112	100	15	8.0	6.2	9	3	9.9	-	EX307/16	EX317/16
1/2	20	12.700	110	18	9.0	7.0	10	3	11.5	-	EX301/2	EX311/2
5/8	18	15.875	110	20	12.0	9.0	12	4	14.5	-	EX305/8	EX315/8
3/4	16	19.050	125	25	14.0	11.0	14	4	17.5	-	EX303/4	EX313/4
7/8	14	22.225	140	25	18.0	14.5	17	4	20.4	-	EX307/8	EX317/8
1“	12	25.400	160	30	18.0	14.5	17	4	23.25	-	EX301	EX311

E033

- UNF 机用45°螺旋槽丝锥
- UNF Macho Máquina Canal Helicoidal 45°
- UNF Machos de máquina Estrías helicoidales a 45°
- UNF Machine Tap Spiral Flute 45°

提供HSS-E,直到库存更新至HSS-E PM
Fornecido em HSS-E até disponibilidade do novo estoque
Suministrado en HSS-E hasta disponibilidad de nuevo stock
Supplied in HSS-E until new stock available

E033 ▪ 1.1 1.2 1.3 1.4 1.5
• 1.6 2.1 2.2 2.3

E033 UNF | ISO 529 | 2B | 2.5XD | HSS-E PM | C 2-3 | λ45° | ST

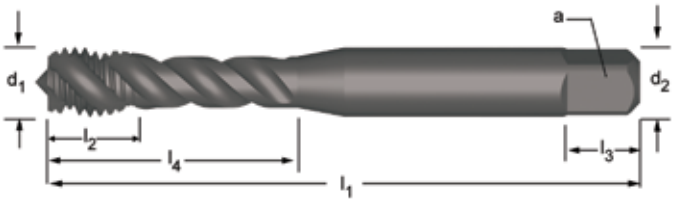

E033

No.8 - 1“

UNF	TPI	d_1 nom mm	l_1 mm	l_2 mm	d_2 Ø mm	a mm	l_3 mm	z	↔	l_4 mm	E033
8	36	4.166	53	7	4.5	3.55	6	3	3.50	17	E0338-36
10	32	4.826	58	8	5.0	4.00	7	3	4.10	20	E03310-32
1/4	28	6.350	66	10	6.3	5.00	8	3	5.50	28	E0331/4
5/16	24	7.938	72	12	8.0	6.30	9	3	6.90	31	E0335/16
3/8	24	9.525	80	15	10.0	8.00	11	3	8.50	34	E0333/8
7/16	20	11.112	85	19	8.0	6.30	9	3	9.90	-	E0337/16
1/2	20	12.700	89	22	9.0	7.10	10	3	11.50	-	E0331/2
9/16	18	14.288	95	24	11.2	9.00	12	3	12.90	-	E0339/16
5/8	18	15.875	102	24	12.5	10.00	13	4	14.50	-	E0335/8
3/4	16	19.050	112	29	14.0	11.20	14	4	17.50	-	E0333/4
7/8	14	22.225	118	29	16.0	12.50	16	4	20.40	-	E0337/8
1“	12	25.400	130	35	18.0	14.00	18	4	23.25	-	E0331

E654

- UNF 机用30°钻攻复合螺旋槽丝锥
- UNF Broca-Macho Canal Helicoidal 30°
- UNF Combinación broca-macho Estrías helicoidales a 30°
- UNF Combi Taps Spiral Flute 30°

E654 • 1.1 1.2 1.3 1.4 3.2 6.2 6.3 7.1 7.2 8.1

E654 UNF | DORMER DIN | Medium | 1.5XD | HSS | C 2-3 | λ30° | ST

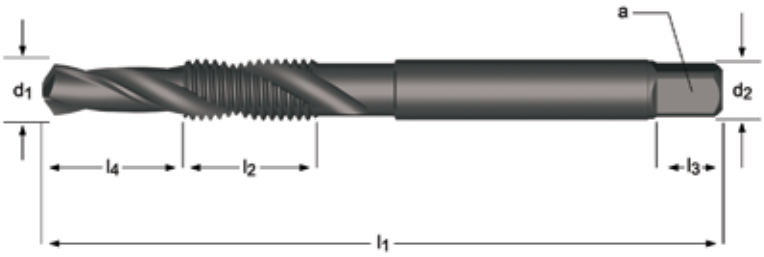

E654

No.8 - 5/8

UNF	TPI	d_1 nom mm	l_1 mm	l_2 mm	l_4 mm	d_2 Ø mm	◪ a mm	z	E654
8	36	3.50	64	13	8	4.5	3.55	2	E6548-36
10	32	4.10	72	16	10	5.0	4.00	2	E65410-32
12	28	4.70	77	17	11	5.6	4.50	2	E65412-28
1/4	28	5.50	83	19	13	6.3	5.00	2	E6541/4
5/16	24	6.90	94	22	16	8.0	6.30	2	E6545/16
3/8	24	8.50	104	24	19	10.0	8.00	2	E6543/8
7/16	20	9.90	107	25	22	8.0	6.30	2	E6547/16
1/2	20	11.50	114	29	25	9.0	7.10	2	E6541/2
5/8	18	14.50	134	32	32	12.5	10.00	2	E6545/8

E286

- UNF 机用挤压丝锥,带油槽
- UNF Macho Máquina de Laminação com ranhuras para Lubrificação
- UNF Machos de laminación, con ranuras de lubrificación
- UNF Machine Forming Tap, Oil Grooves

E286												
	■	1.1	1.2	1.3	1.4	2.1	2.2	4.1	5.1	7.1	7.2	7.3
	•	1.5	2.3	5.2	6.1	6.3	7.4					

E286 UNF | DIN 2184-1 | 2BX | 3.5XD | HSS-E | C 2-3.5 | TiN

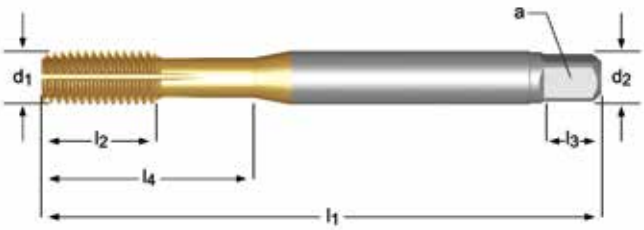

E286

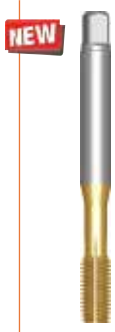

No.4 - 1/2

UNF	TPI	d_1 nom mm	l_1 mm	l_2 mm	d_2 Ø mm	◪ a mm	l_3 mm	z	↔	l_4 mm	E286
4	48	2.845	56	9	3.5	2.7	6	4	2.6	18	E2864-48
6	40	3.505	56	11	4.0	3.0	6	4	3.2	20	E2866-40
8	36	4.166	63	12	4.5	3.4	6	5	3.9	21	E2868-36
10	32	4.826	70	13	6.0	4.9	8	5	4.5	25	E28610-32
1/4	28	6.350	80	15	7.0	5.5	8	5	6.0	30	E2861/4
5/16	24	7.938	90	18	8.0	6.2	9	5	7.5	35	E2865/16
3/8	24	9.525	100	20	10.0	8.0	11	5	9.1	39	E2863/8
7/16	20	11.112	100	20	8.0	6.2	9	5	10.6	-	E2867/16
1/2	20	12.700	100	21	9.0	7.0	10	5	12.1	-	E2861/2

DORMER

E570

- UN 机用直槽丝锥
- UN Macho Máquina Canal Reto
- UN Machos de máquina Estrías rectas
- UN Machine Tap Straight Flute

E570 • 1.1 1.2 1.3 1.4 1.5 3.1 3.2 3.3 3.4 6.1 6.2 6.3 6.4 7.2 7.3 7.4 8.2 8.3

E570 UN | ISO 529 | 2B | 1.5XD | HSS | C 2-3

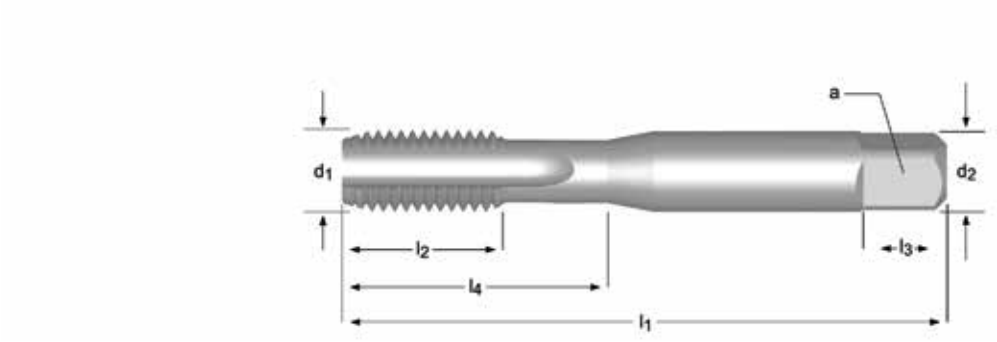

E570

1/4 - 1.5/16

UN	TPI	d_1 nom mm	l_1 mm	l_2 mm	d_2 Ø mm	a mm	z	↔	l_4 mm	E570
1/4	32	6.350	66	13	6.3	5.00	3	5.6	26	E5701/4X32NO3
1/4	36	6.350	66	13	6.3	5.00	3	5.7	26	E5701/4X36NO3
1/4	40	6.350	66	13	6.3	5.00	3	5.7	26	E5701/4X40NO3
5/16	32	7.938	72	16	8.0	6.30	3	7.2	29	E5705/16X32NO3
3/8	32	9.525	80	18	10.0	8.00	3	8.8	32	E5703/8X32NO3
7/16	24	11.112	85	19	8.0	6.30	3	10	-	E5707/16X24NO3
7/16	28	11.112	85	19	8.0	6.30	3	10.2	-	E5707/16X28NO3
1/2	28	12.700	89	22	9.0	7.10	3	11.8	-	E5701/2X28NO3
9/16	24	14.288	95	24	11.2	9.00	4	13.25	-	E5709/16X24NO3
5/8	24	15.875	102	24	12.5	10.00	4	14.8	-	E5705/8X24NO3
3/4	20	19.050	112	29	14.0	11.20	4	17.8	-	E5703/4X20NO3
7/8	20	22.225	118	30	16.0	12.50	4	21	-	E5707/8X20NO3
1“	14	25.400	130	36	18.0	14.00	4	23.5	-	E5701X14NO3
1.1/16	12	26.988	127	37	20.0	16.00	4	24.75	-	E5701.1/16X12NO3
1.1/8	8	28.575	138	35	20.0	16.00	4	25.5	-	E5701.1/8X8NO3
1.3/16	12	30.163	137	37	22.4	18.00	4	28	-	E5701.3/16X12NO3
1.1/4	8	31.750	151	41	22.4	18.00	4	28.5	-	E5701.1/4X8NO3
1.5/16	12	33.338	137	37	22.4	18.00	4	31.25	-	E5701.5/16X12NO3

NO1 - NO9
219

E115

- BSW 手用直槽丝锥
- BSW Macho Manual Canal Reto
- BSW Machos de mano Estrías rectas
- BSW Hand Tap Straight Flute

E115 • 1.1 1.2 1.3 1.4 1.5 3.1 3.2 3.3 3.4 6.1 6.2 6.3 6.4 7.2 7.3 7.4 8.2 8.3

E115 BSW | DIN 351 | Medium | 1.5XD | HSS | C 2-3

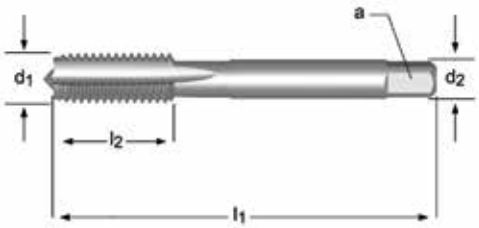

E115

1/8 - 1“

BSW	TPI	d_1 nom mm	l_1 mm	l_2 mm	d_2 Ø mm	a mm	z	↔	E115
1/8	40	3.175	40	10	3.5	2.7	3	2.55	E1151/8NO3
1/8	40	3.175	40	10	3.5	2.7	3	2.55	E1151/8NO8
5/32	32	3.969	45	12	4.5	3.4	3	3.2	E1155/32NO3
5/32	32	3.969	45	12	4.5	3.4	3	3.2	E1155/32NO8
3/16	24	4.763	50	16	5.5	4.3	3	3.7	E1153/16NO3
3/16	24	4.763	50	16	5.5	4.3	3	3.7	E1153/16NO8
1/4	20	6.350	56	17	6.0	4.9	3	5.1	E1151/4NO3
1/4	20	6.350	56	17	6.0	4.9	3	5.1	E1151/4NO8
5/16	18	7.938	63	25	6.0	4.9	3	6.5	E1155/16NO3
5/16	18	7.938	63	25	6.0	4.9	3	6.5	E1155/16NO8
3/8	16	9.525	70	22	7.0	5.5	3	7.9	E1153/8NO3
3/8	16	9.525	70	22	7.0	5.5	3	7.9	E1153/8NO8
7/16	14	11.113	75	30	8.0	6.2	3	9.2	E1157/16NO3
7/16	14	11.113	75	30	8.0	6.2	3	9.2	E1157/16NO8
1/2	12	12.700	80	30	9.0	7.0	3	10.5	E1151/2NO3
1/2	12	12.700	80	30	9.0	7.0	3	10.5	E1151/2NO8
9/16	12	14.288	80	30	11.0	9.0	4	12	E1159/16NO3
9/16	12	14.288	80	30	11.0	9.0	4	12	E1159/16NO8
5/8	11	15.875	90	36	12.0	9.0	4	13.5	E1155/8NO3
5/8	11	15.875	90	36	12.0	9.0	4	13.5	E1155/8NO8
3/4	10	19.050	105	40	14.0	11.0	4	16.5	E1153/4NO3
3/4	10	19.050	105	40	14.0	11.0	4	16.5	E1153/4NO8
7/8	9	22.225	110	45	18.0	14.5	4	19.25	E1157/8NO3
7/8	9	22.225	110	45	18.0	14.5	4	19.25	E1157/8NO8
1“	8	25.400	110	50	20.0	16.0	4	22	E1151NO3
1“	8	25.400	110	50	20.0	16.0	4	22	E1151NO8

NO1 - NO9
219

DORMER

E531

- BSW 机用直槽丝锥
- BSW Macho Máquina Canal Reto
- BSW Machos de máquina Estrías rectas
- BSW Machine Tap Straight Flute

E531 • 1.1 1.2 1.3 1.4 1.5 3.1 3.2 3.3 3.4 6.1 6.2 6.3 6.4 7.2 7.3 7.4 8.2 8.3

E531 BSW ISO 529 Medium 1.5XD HSS

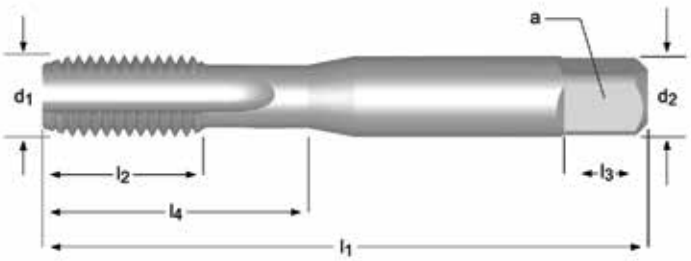

E531

1/8 - 1"

BSW	TPI	d_1 nom mm	l_1 mm	l_2 mm	d_2 Ø mm	a mm	z		l_4 mm	E531
1/8	40	3.175	48	12.5	3.15	2.50	3	2.55	12.5	E5311/8NO1
1/8	40	3.175	48	12.5	3.15	2.50	3	2.55	12.5	E5311/8NO2
1/8	40	3.175	48	12.5	3.15	2.50	3	2.55	12.5	E5311/8NO3
1/8	40	3.175	48	12.5	3.15	2.50	3	2.55	12.5	E5311/8NO6
5/32	32	3.969	53	14	4.00	3.15	3	3.2	14	E5315/32NO1
5/32	32	3.969	53	14	4.00	3.15	3	3.2	14	E5315/32NO2
5/32	32	3.969	53	14	4.00	3.15	3	3.2	14	E5315/32NO3
5/32	32	3.969	53	14	4.00	3.15	3	3.2	14	E5315/32NO6
3/16	24	4.763	58	11	5.00	4.00	3	3.7	20	E5313/16NO1
3/16	24	4.763	58	11	5.00	4.00	3	3.7	20	E5313/16NO2
3/16	24	4.763	58	11	5.00	4.00	3	3.7	20	E5313/16NO3
3/16	24	4.763	58	11	5.00	4.00	3	3.7	20	E5313/16NO6
1/4	20	6.350	66	13	6.30	5.00	3	5.1	26	E5311/4NO1
1/4	20	6.350	66	13	6.30	5.00	3	5.1	26	E5311/4NO2
1/4	20	6.350	66	13	6.30	5.00	3	5.1	26	E5311/4NO3
1/4	20	6.350	66	13	6.30	5.00	3	5.1	26	E5311/4NO6
5/16	18	7.938	72	16	8.00	6.30	3	6.5	29	E5315/16NO1
5/16	18	7.938	72	16	8.00	6.30	3	6.5	29	E5315/16NO2
5/16	18	7.938	72	16	8.00	6.30	3	6.5	29	E5315/16NO3
5/16	18	7.938	72	16	8.00	6.30	3	6.5	29	E5315/16NO6
3/8	16	9.525	80	18	10.00	8.00	3	7.9	32	E5313/8NO1
3/8	16	9.525	80	18	10.00	8.00	3	7.9	32	E5313/8NO2
3/8	16	9.525	80	18	10.00	8.00	3	7.9	32	E5313/8NO3
3/8	16	9.525	80	18	10.00	8.00	3	7.9	32	E5313/8NO6
7/16	14	11.112	85	19	8.00	6.30	3	9.2	-	E5317/16NO1
7/16	14	11.112	85	19	8.00	6.30	3	9.2	-	E5317/16NO2
7/16	14	11.112	85	19	8.00	6.30	3	9.2	-	E5317/16NO3
7/16	14	11.112	85	19	8.00	6.30	3	9.2	-	E5317/16NO6
1/2	12	12.700	89	22	9.00	7.10	3	10.5	-	E5311/2NO1
1/2	12	12.700	89	22	9.00	7.10	3	10.5	-	E5311/2NO2
1/2	12	12.700	89	22	9.00	7.10	3	10.5	-	E5311/2NO3
1/2	12	12.700	89	22	9.00	7.10	3	10.5	-	E5311/2NO6
5/8	11	15.875	102	24	12.50	10.00	4	13.5	-	E5315/8NO1
5/8	11	15.875	102	24	12.50	10.00	4	13.5	-	E5315/8NO2
5/8	11	15.875	102	24	12.50	10.00	4	13.5	-	E5315/8NO3
5/8	11	15.875	102	24	12.50	10.00	4	13.5	-	E5315/8NO6
3/4	10	19.050	112	29	14.00	11.20	4	16.5	-	E5313/4NO1
3/4	10	19.050	112	29	14.00	11.20	4	16.5	-	E5313/4NO2
3/4	10	19.050	112	29	14.00	11.20	4	16.5	-	E5313/4NO3
3/4	10	19.050	112	29	14.00	11.20	4	16.5	-	E5313/4NO6

NO1 - NO9
219

BSW	TPI	d_1 nom mm	l_1 mm	l_2 mm	d_2 Ø mm	◪ a mm	z	↔	l_4 mm	E531
1“	8	25.400	130	35	18.00	14.00	4	22	-	E5311NO1
1“	8	25.400	130	35	18.00	14.00	4	22	-	E5311NO2
1“	8	25.400	130	35	18.00	14.00	4	22	-	E5311NO3
1“	8	25.400	130	35	18.00	14.00	4	22	-	E5311NO6

NO1 - NO9
219

E534

- BSW 机用螺尖丝锥
- BSW Macho Máquina Ponta Helicoidal
- BSW Machos de máquina Entrada en hélice
- BSW Machine Tap Spiral Point

E534													
	■	1.1	1.2	1.3	1.4	2.1	2.2	2.3					
	•	1.5	1.6	4.3	5.1	5.2	6.1	6.3	7.1	7.2	7.3	7.4	8.1

E534 BSW ISO 529 Medium 2.5XD HSS B 3.5-5 ST

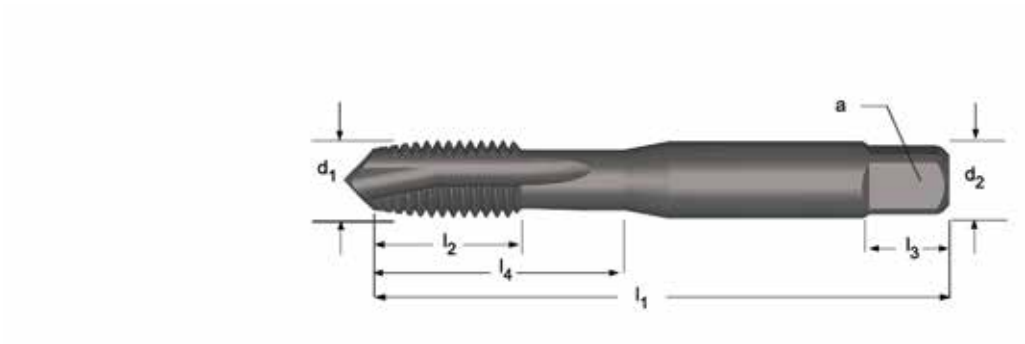

E534

1/8 - 3/4

BSW	TPI	d_1 nom mm	l_1 mm	l_2 mm	d_2 Ø mm	◪ a mm	z	↔	l_4 mm	E534
1/8	40	3.175	48	12.5	3.15	2.50	3	2.55	12.5	E5341/8
5/32	32	3.969	53	14	4.00	3.15	3	3.2	14	E5345/32
3/16	24	4.763	58	11	5.00	4.00	3	3.7	20	E5343/16
1/4	20	6.350	66	13	6.30	5.00	3	5.1	26	E5341/4
5/16	18	7.938	72	16	8.00	6.30	3	6.5	29	E5345/16
3/8	16	9.525	80	18	10.00	8.00	3	7.9	32	E5343/8
7/16	14	11.112	85	19	8.00	6.30	3	9.2	-	E5347/16
1/2	12	12.700	89	22	9.00	7.10	3	10.5	-	E5341/2
5/8	11	15.875	102	24	12.50	10.00	3	13.5	-	E5345/8
3/4	10	19.050	112	29	14.00	11.20	4	16.5	-	E5343/4

E533

- BSW 机用40°螺旋槽丝锥
- BSW Macho Máquina Canal Helicoidal 40°
- BSW Machos de máquina Estrías helicoidales a 40°
- BSW Machine Tap Spiral Flute 40°

E533						
■	1.2	1.3	1.4	2.1	2.2	2.3
•	1.5	5.2	7.1	7.2	7.3	7.4

E533 BSW ISO 529 Medium 2XD HSS C 2-3 λ40° ST

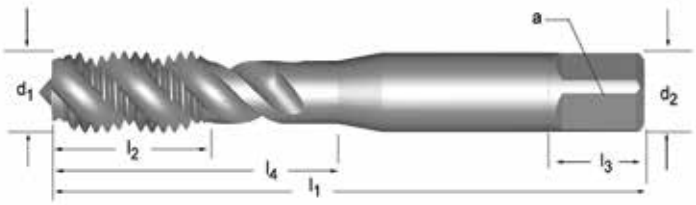

E533

1/8 - 3/4

BSW	TPI	d_1 nom mm	l_1 mm	l_2 mm	d_2 Ø mm	a mm	z	↔	l_4 mm	E533
1/8	40	3.175	48	12.5	3.15	2.50	3	2.55	12.5	E5331/8 [3]
1/8	40	3.175	48	12.5	3.15	2.50	3	2.55	12.5	E5331/8BLUE
3/16	24	4.763	58	11	5.00	4.00	3	3.7	20	E5333/16 [3]
3/16	24	4.763	58	11	5.00	4.00	3	3.7	20	E5333/16BLUE
1/4	20	6.350	66	13	6.30	5.00	3	5.1	26	E5331/4 [3]
1/4	20	6.350	66	13	6.30	5.00	3	5.1	26	E5331/4BLUE
5/16	18	7.938	72	16	8.00	6.30	3	6.5	31	E5335/16 [3]
5/16	18	7.938	72	16	8.00	6.30	3	6.5	31	E5335/16BLUE
3/8	16	9.525	80	18	10.00	8.00	3	7.9	34	E5333/8 [3]
3/8	16	9.525	80	18	10.00	8.00	3	7.9	34	E5333/8BLUE
1/2	12	12.700	89	22	9.00	7.10	3	10.5	-	E5331/2 [3]
1/2	12	12.700	89	22	9.00	7.10	3	10.5	-	E5331/2BLUE
5/8	11	15.875	102	24	12.50	10.00	3	13.5	-	E5335/8 [3]
5/8	11	15.875	102	24	12.50	10.00	3	13.5	-	E5335/8BLUE
3/4	10	19.050	112	29	14.00	11.20	3	16.5	-	E5333/4 [3]
3/4	10	19.050	112	29	14.00	11.20	3	16.5	-	E5333/4BLUE

[3] 光亮 / Brilhante / Brillante / Bright Finish

DORMER

E536

- BSF 机用直槽丝锥
- BSF Macho Máquina Canal Reto
- BSF Machos de máquina Estrías rectas
- BSF Machine Tap Straight Flute

E536		
	■	6.1
	•	1.1 1.2 1.3 1.4 1.5 1.6 2.1 2.2 2.3 3.1 3.2 3.3 3.4 6.2 6.3 6.4 7.2 7.3 7.4 8.2 8.3

E536 BSF ISO 529 Medium 1.5XD HSS

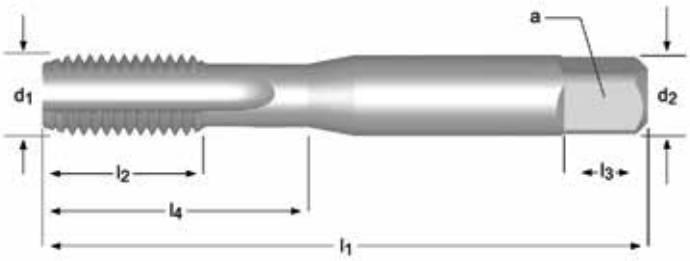

E536

3/16 - 1"

BSF	TPI	d_1 nom mm	l_1 mm	l_2 mm	d_2 Ø mm	a mm	z	↔	l_4 mm	E536
3/16	32	4.76	58	12	5.0	4.0	3	4	20	E5363/16NO1
3/16	32	4.76	58	12	5.0	4.0	3	4	20	E5363/16NO2
3/16	32	4.76	58	12	5.0	4.0	3	4	20	E5363/16NO3
3/16	32	4.76	58	12	5.0	4.0	3	4	20	E5363/16NO6
1/4	26	6.35	66	14	6.3	5.0	3	5.3	26	E5361/4NO1
1/4	26	6.35	66	14	6.3	5.0	3	5.3	26	E5361/4NO2
1/4	26	6.35	66	14	6.3	5.0	3	5.3	26	E5361/4NO3
1/4	26	6.35	66	14	6.3	5.0	3	5.3	26	E5361/4NO6
5/16	22	7.94	72	18	8.0	6.3	3	6.8	29	E5365/16NO1
5/16	22	7.94	72	18	8.0	6.3	3	6.8	29	E5365/16NO2
5/16	22	7.94	72	18	8.0	6.3	3	6.8	29	E5365/16NO3
5/16	22	7.94	72	18	8.0	6.3	3	6.8	29	E5365/16NO6
3/8	20	9.53	80	20	10.0	8.0	3	8.3	32	E5363/8NO1
3/8	20	9.53	80	20	10.0	8.0	3	8.3	32	E5363/8NO2
3/8	20	9.53	80	20	10.0	8.0	3	8.3	32	E5363/8NO3
3/8	20	9.53	80	20	10.0	8.0	3	8.3	32	E5363/8NO6
7/16	18	11.11	85	20	8.0	6.3	3	9.7	-	E5367/16NO1
7/16	18	11.11	85	20	8.0	6.3	3	9.7	-	E5367/16NO2
7/16	18	11.11	85	20	8.0	6.3	3	9.7	-	E5367/16NO3
1/2	16	12.70	89	23	9.0	7.1	3	11	-	E5361/2NO1
1/2	16	12.70	89	23	9.0	7.1	3	11	-	E5361/2NO2
1/2	16	12.70	89	23	9.0	7.1	3	11	-	E5361/2NO3
1/2	16	12.70	89	23	9.0	7.1	3	11	-	E5361/2NO6
9/16	16	14.28	95	25	11.2	9.0	4	12.7	-	E5369/16NO1
9/16	16	14.28	95	25	11.2	9.0	4	12.7	-	E5369/16NO2
9/16	16	14.28	95	25	11.2	9.0	4	12.7	-	E5369/16NO3
5/8	14	15.88	102	25	12.5	10.0	4	14	-	E5365/8NO1
5/8	14	15.88	102	25	12.5	10.0	4	14	-	E5365/8NO2
5/8	14	15.88	102	25	12.5	10.0	4	14	-	E5365/8NO3
3/4	12	19.05	112	30	14.0	11.2	4	17	-	E5363/4NO1
3/4	12	19.05	112	30	14.0	11.2	4	17	-	E5363/4NO2
3/4	12	19.05	112	30	14.0	11.2	4	17	-	E5363/4NO3
7/8	11	22.23	118	30	16.0	12.5	4	19.75	-	E5367/8NO1
7/8	11	22.23	118	30	16.0	12.5	4	19.75	-	E5367/8NO2
7/8	11	22.23	118	30	16.0	12.5	4	19.75	-	E5367/8NO3
7/8	11	22.23	118	30	16.0	12.5	4	19.75	-	E5367/8NO6
1"	10	25.40	130	36	18.0	14.0	4	22.75	-	E5361NO1
1"	10	25.40	130	36	18.0	14.0	4	22.75	-	E5361NO2
1"	10	25.40	130	36	18.0	14.0	4	22.75	-	E5361NO3

NO1 - NO9
219

E539

- BSF 机用螺尖丝锥
- BSF Macho Máquina Ponta Helicoidal
- BSF Machos de máquina Entrada en hélice
- BSF Machine Tap Spiral Point

E539													
	■	1.1	1.2	1.3	1.4	2.1	2.2	2.3					
	•	1.5	1.6	4.3	5.1	5.2	6.1	6.3	7.1	7.2	7.3	7.4	8.1

E539 BSF ISO 529 Medium 2.5XD HSS B 3.5-5 ST

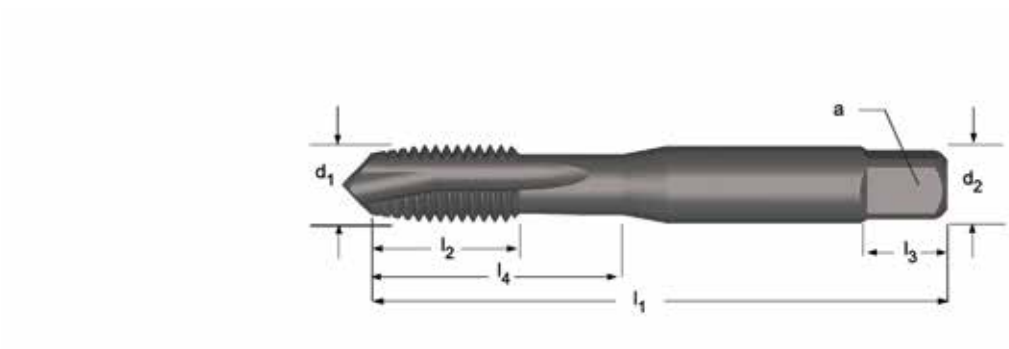

E539

1/4 - 1/2

BSF	TPI	d_1 nom mm	l_1 mm	l_2 mm	d_2 Ø mm	◪ a mm	z	↔	l_4 mm	E539
1/4	26	6.35	66	14	6.3	5.0	3	5.3	26	E5391/4
5/16	22	7.94	72	18	8.0	6.3	3	6.8	29	E5395/16
3/8	20	9.53	80	20	10.0	8.0	3	8.3	32	E5393/8
1/2	16	12.70	89	23	9.0	7.1	3	11	-	E5391/2

E538

- BSF 机用40°螺旋槽丝锥
- BSF Macho Máquina Canal Helicoidal 40°
- BSF Machos de máquina Estrías helicoidales a 40°
- BSF Machine Tap Spiral Flute 40°

E538							
	■	1.2	1.3	1.4	2.1	2.2	2.3
	•	1.5	5.2	7.1	7.2	7.3	7.4

E538 BSF ISO 529 Medium 2XD HSS C 2-3 λ40° ST

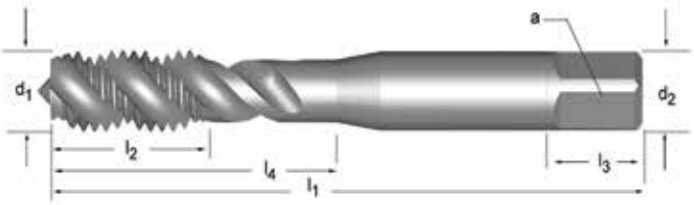

E538

1/4 - 1/2

BSF	TPI	d_1 nom mm	l_1 mm	l_2 mm	d_2 Ø mm	◪ a mm	z	↔	l_4 mm	E538
1/4	26	6.350	66	13	6.3	5.00	3	5.3	26	E5381/4 [3]
1/4	26	6.350	66	13	6.3	5.00	3	5.3	26	E5381/4BLUE
5/16	22	7.938	72	16	8.0	6.30	3	6.8	31	E5385/16 [3]
5/16	22	7.938	72	16	8.0	6.30	3	6.8	31	E5385/16BLUE
3/8	20	9.525	80	18	10.0	8.00	3	8.3	34	E5383/8 [3]
3/8	20	9.525	80	18	10.0	8.00	3	8.3	34	E5383/8BLUE
1/2	16	12.700	89	22	9.0	7.10	3	11	-	E5381/2 [3]
1/2	16	12.700	89	22	9.0	7.10	3	11	-	E5381/2BLUE

[3] 光亮 / Brilhante / Brillante / Bright Finish

E542

- BA 机用直槽丝锥
- BA Macho Máquina Canal Reto
- BA Machos de máquina Estrías rectas
- BA Machine Tap Straight Flute

E542 • 1.1 1.2 1.3 1.4 1.5 3.1 3.2 3.3 3.4 6.1 6.2 6.3 6.4 7.2 7.3 7.4 8.2 8.3

E542 BA | ISO 529 | Normal | 1.5XD | HSS

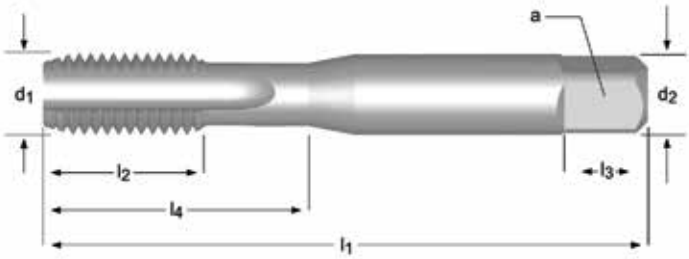

E542

No.10 - No.0

BA	P mm	d_1 nom mm	l_1 mm	l_2 mm	d_2 Ø mm	a mm	l_3 mm	z	↔	l_4 mm	E542
BA10	0.35	1.70	41	7.0	2.50	2.0	4	2	1.3	7	E542BA10NO1
BA10	0.35	1.70	41	7.0	2.50	2.0	4	2	1.3	7	E542BA10NO2
BA10	0.35	1.70	41	7.0	2.50	2.0	4	2	1.3	7	E542BA10NO3
BA10	0.35	1.70	41	7.0	2.50	2.0	4	2	1.3	7	E542BA10NO6
BA 8	0.43	2.20	44.5	9.5	2.80	2.2	5	3	1.8	9.5	E542BA8NO1
BA 8	0.43	2.20	44.5	9.5	2.80	2.2	5	3	1.8	9.5	E542BA8NO2
BA 8	0.43	2.20	44.5	9.5	2.80	2.2	5	3	1.8	9.5	E542BA8NO3
BA 8	0.43	2.20	44.5	9.5	2.80	2.2	5	3	1.8	9.5	E542BA8NO6
BA 6	0.53	2.80	44.5	9.5	2.80	2.2	5	3	2.3	9.5	E542BA6NO1
BA 6	0.53	2.80	44.5	9.5	2.80	2.2	5	3	2.3	9.5	E542BA6NO2
BA 6	0.53	2.80	44.5	9.5	2.80	2.2	5	3	2.3	9.5	E542BA6NO3
BA 6	0.53	2.80	44.5	9.5	2.80	2.2	5	3	2.3	9.5	E542BA6NO6
BA 5	0.59	3.20	48	14.5	3.15	2.5	5	3	2.65	14.5	E542BA5NO1
BA 5	0.59	3.20	48	14.5	3.15	2.5	5	3	2.65	14.5	E542BA5NO2
BA 5	0.59	3.20	48	14.5	3.15	2.5	5	3	2.65	14.5	E542BA5NO3
BA 5	0.59	3.20	48	14.5	3.15	2.5	5	3	2.65	14.5	E542BA5NO6
BA 4	0.66	3.60	50	16.5	3.55	2.8	5	3	3	16.5	E542BA4NO1
BA 4	0.66	3.60	50	16.5	3.55	2.8	5	3	3	16.5	E542BA4NO2
BA 4	0.66	3.60	50	16.5	3.55	2.8	5	3	3	16.5	E542BA4NO3
BA 4	0.66	3.60	50	16.5	3.55	2.8	5	3	3	16.5	E542BA4NO6
BA 3	0.73	4.10	53	10.0	4.50	3.5	6	3	3.4	17	E542BA3NO1
BA 3	0.73	4.10	53	10.0	4.50	3.5	6	3	3.4	17	E542BA3NO2
BA 3	0.73	4.10	53	10.0	4.50	3.5	6	3	3.4	17	E542BA3NO3
BA 3	0.73	4.10	53	10.0	4.50	3.5	6	3	3.4	17	E542BA3NO6
BA 2	0.81	4.70	58	12.0	5.00	4.0	7	3	4	20	E542BA2NO1
BA 2	0.81	4.70	58	12.0	5.00	4.0	7	3	4	20	E542BA2NO2
BA 2	0.81	4.70	58	12.0	5.00	4.0	7	3	4	20	E542BA2NO3
BA 2	0.81	4.70	58	12.0	5.00	4.0	7	3	4	20	E542BA2NO6
BA 0	1.00	6.00	66	14.0	6.30	5.0	8	3	5.1	26	E542BA0NO1
BA 0	1.00	6.00	66	14.0	6.30	5.0	8	3	5.1	26	E542BA0NO2
BA 0	1.00	6.00	66	14.0	6.30	5.0	8	3	5.1	26	E542BA0NO3
BA 0	1.00	6.00	66	14.0	6.30	5.0	8	3	5.1	26	E542BA0NO6

NO1 - NO9
219

E545

- BA 机用螺尖丝锥
- BA Macho Máquina Ponta Helicoidal
- BA Machos de máquina Entrada en hélice
- BA Machine Tap Spiral Point

E545															
	▪	1.1	1.2	1.3	1.4										
	•	1.5	1.6	2.1	2.2	2.3	4.3	5.1	5.2	6.1	6.3	7.1	7.2	7.3	7.4	8.1

E545 BA ISO 529 Normal 2.5XD HSS B 3.5-5 ST

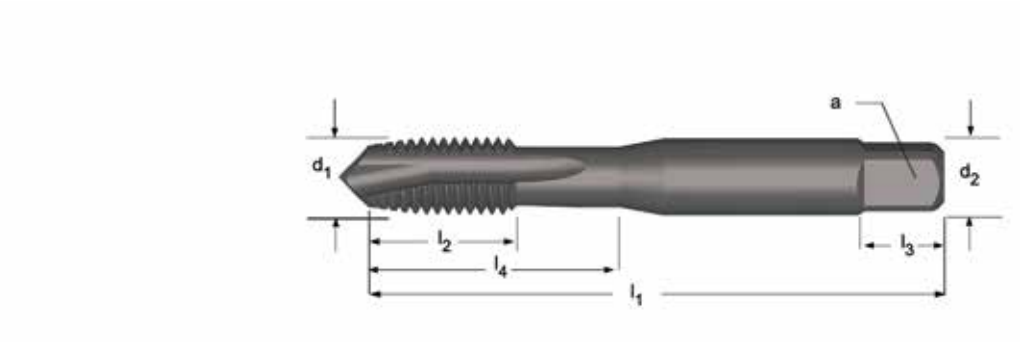

E545

No.10 - No.2

BA	P mm	d_1 nom mm	l_1 mm	l_2 mm	d_2 Ø mm	◪ a mm	l_3 mm	z	↔	l_4 mm	E545
BA10	0.35	1.70	41	7.0	2.50	2.0	4	2	1.3	7	E545BA10
BA 8	0.43	2.20	44.5	9.5	2.80	2.2	5	3	1.8	9.5	E545BA8
BA 6	0.53	2.80	44.5	9.5	2.80	2.2	5	3	2.3	9.5	E545BA6
BA 4	0.66	3.60	50	16.5	3.55	2.8	5	3	3	16.5	E545BA4
BA 2	0.81	4.70	58	12.0	5.00	4.0	7	3	4	20	E545BA2

E544

- BA 机用40°螺旋槽丝锥
- BA Macho Máquina Canal Helicoidal 40°
- BA Machos de máquina Estrías helicoidales a 40°
- BA Machine Tap Spiral Flute 40°

E544						
▪	1.2	1.3	1.4	2.1	2.2	2.3
•	1.5	5.2	7.1	7.2	7.3	7.4

E544 BA ISO 529 Normal 2XD HSS C 2-3 λ40° ST

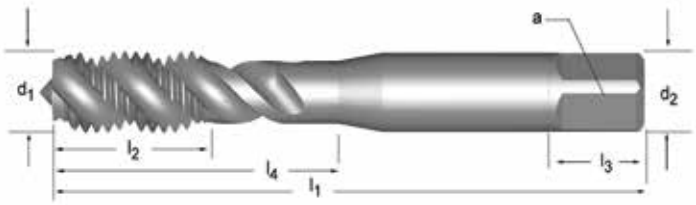

E544

No.8 - No.2

BA	P mm	d_1 nom mm	l_1 mm	l_2 mm	d_2 Ø mm	⧄ a mm	l_3 mm	z	↔	l_4 mm	E544
BA 8	0.43	2.20	44.5	9.5	2.80	2.2	5	2	1.8	9.5	E544BA8 [3]
BA 8	0.43	2.20	44.5	9.5	2.80	2.2	5	2	1.8	9.5	E544BA8BLUE
BA 6	0.53	2.80	44.5	9.5	2.80	2.2	5	2	2.3	9.5	E544BA6 [3]
BA 6	0.53	2.80	44.5	9.5	2.80	2.2	5	2	2.3	9.5	E544BA6BLUE
BA 4	0.66	3.60	50	16.5	3.55	2.8	5	3	3	16.5	E544BA4 [3]
BA 4	0.66	3.60	50	16.5	3.55	2.8	5	3	3	16.5	E544BA4BLUE
BA 2	0.81	4.70	58	12.0	5.00	4.0	7	3	4	20	E544BA2 [3]
BA 2	0.81	4.70	58	12.0	5.00	4.0	7	3	4	20	E544BA2BLUE

[3] 光亮 / Brilhante / Brillante / Bright Finish

DORMER

E119

- G(BSP) 手用直槽丝锥
- G(BSP) Macho Manual Canal Reto
- G(BSP) Machos de mano Estrías rectas
- G(BSP) Hand Tap Straight Flute

E119 • 1.1 1.2 1.3 1.4 1.5 3.1 3.2 3.3 3.4 6.1 6.2 6.3 6.4 7.2 7.3 7.4 8.2 8.3

E119 G | DIN 5157 | Normal | 1.5XD | HSS | C 2-3

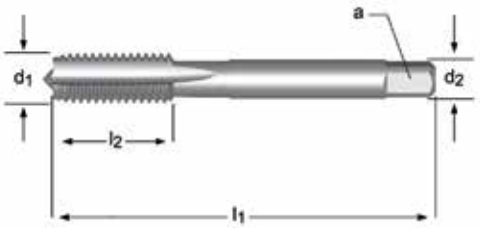

E119

1/8 - 3"

G(BSP)	TPI	d_1 nom mm	l_1 mm	l_2 mm	d_2 Ø mm	a mm	z	↔	E119
1/8	28	9.73	63	15	7.0	5.5	3	8.8	E1191/8NO3
1/8	28	9.73	63	15	7.0	5.5	3	8.8	E1191/8NO9
1/4	19	13.16	70	16	11.0	9.0	4	11.8	E1191/4NO3
1/4	19	13.16	70	16	11.0	9.0	4	11.8	E1191/4NO9
3/8	19	16.66	70	16	12.0	9.0	4	15.25	E1193/8NO3
3/8	19	16.66	70	16	12.0	9.0	4	15.25	E1193/8NO9
1/2	14	20.96	80	18	16.0	12.0	4	19	E1191/2NO3
1/2	14	20.96	80	18	16.0	12.0	4	19	E1191/2NO9
5/8	14	22.91	80	22	18.0	14.5	4	21	E1195/8NO3
5/8	14	22.91	80	22	18.0	14.5	4	21	E1195/8NO9
3/4	14	26.44	90	22	20.0	16.0	4	24.5	E1193/4NO3
3/4	14	26.44	90	22	20.0	16.0	4	24.5	E1193/4NO9
7/8	14	30.20	90	22	22.0	18.0	6	28.25	E1197/8NO3
7/8	14	30.20	90	22	22.0	18.0	6	28.25	E1197/8NO9
1"	11	33.25	100	25	25.0	20.0	6	30.75	E1191NO3
1"	11	33.25	100	25	25.0	20.0	6	30.75	E1191NO9
1.1/8	11	37.90	125	40	28.0	22.0	6	35	E1191.1/8NO3
1.1/8	11	37.90	125	40	28.0	22.0	6	35	E1191.1/8NO9
1.1/4	11	41.91	125	40	32.0	24.0	6	39.5	E1191.1/4NO3
1.1/4	11	41.91	125	40	32.0	24.0	6	39.5	E1191.1/4NO9
1.1/2	11	47.80	140	40	36.0	29.0	6	45	E1191.1/2NO3
1.1/2	11	47.80	140	40	36.0	29.0	6	45	E1191.1/2NO9
1.3/4	11	53.75	140	40	40.0	32.0	6	51	E1191.3/4NO3
1.3/4	11	53.75	140	40	40.0	32.0	6	51	E1191.3/4NO9
2"	11	59.61	160	40	45.0	35.0	6	57	E1192NO3
2"	11	59.61	160	40	45.0	35.0	6	57	E1192NO9
2.1/4	11	65.71	160	40	50.0	39.0	6	63	E1192.1/4NO3
2.1/4	11	65.71	160	40	50.0	39.0	6	63	E1192.1/4NO9
2.1/2	11	75.18	160	40	50.0	39.0	6	72.5	E1192.1/2NO3
2.1/2	11	75.18	160	40	50.0	39.0	6	72.5	E1192.1/2NO9
2.3/4	11	81.53	160	40	50.0	39.0	8	79	E1192.3/4NO3
2.3/4	11	81.53	160	40	50.0	39.0	8	79	E1192.3/4NO9
3"	11	87.88	160	40	50.0	39.0	8	85.5	E1193NO3
3"	11	87.88	160	40	50.0	39.0	8	85.5	E1193NO9

NO1 - NO9
219

E282

- G(BSP) 机用直槽丝锥
- G(BSP) Macho Máquina Canal Reto
- G(BSP) Machos de máquina Estrías rectas
- G(BSP) Machine Tap Straight Flute

提供HSS-E,直到库存更新至HSS-E PM
Fornecido em HSS-E até disponibilidade do novo estoque
Suministrado en HSS-E hasta disponibilidad de nuevo stock
Supplied in HSS-E until new stock available

E282 • 1.1 1.2 1.3 1.4 1.5 3.1 3.2 3.3 6.2 6.3 7.2 7.3 8.2

E282 G | DIN 5156 | Normal | 1.5XD | HSS-E PM | C 2-3

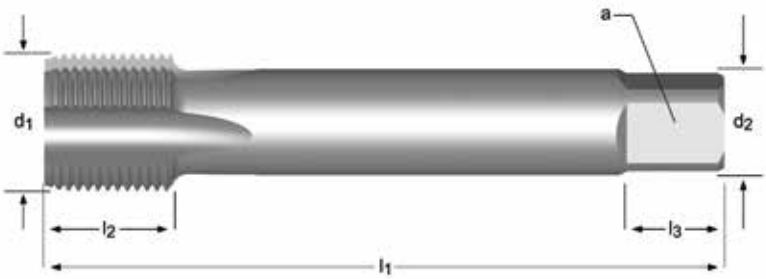

E282

1/8 - 1.1/2

G(BSP)	TPI	d_1 nom mm	l_1 mm	l_2 mm	d_2 Ø mm	◪ a mm	l_3 mm	z	↔	E282
1/8	28	9.73	90	20	7.0	5.5	8	3	8.8	E2821/8
1/4	19	13.16	100	21	11.0	9.0	12	4	11.8	E2821/4
3/8	19	16.66	100	21	12.0	9.0	12	4	15.25	E2823/8
1/2	14	20.96	125	24	16.0	12.0	15	4	19.0	E2821/2
3/4	14	26.44	140	28	20.0	16.0	19	4	24.5	E2823/4
1“	11	33.25	160	30	25.0	20.0	23	4	30.75	E2821
1.1/4	11	41.91	170	30	32.0	24.0	27	4	39.5	E2821.1/4 [1]
1.1/2	11	47.80	190	32	36.0	29.0	32	6	45.0	E2821.1/2 [1]

1) HSS-E

DORMER

E547

- G(BSP) 机用直槽丝锥
- G(BSP) Macho Máquina Canal Reto
- G(BSP) Machos de máquina Estrías rectas
- G(BSP) Machine Tap Straight Flute

E547 • 1.1 1.2 1.3 1.4 1.5 3.1 3.2 3.3 3.4 6.1 6.2 6.3 6.4 7.2 7.3 7.4 8.2 8.3

E547 G | ISO 2284 | Normal | 1.5XD | HSS

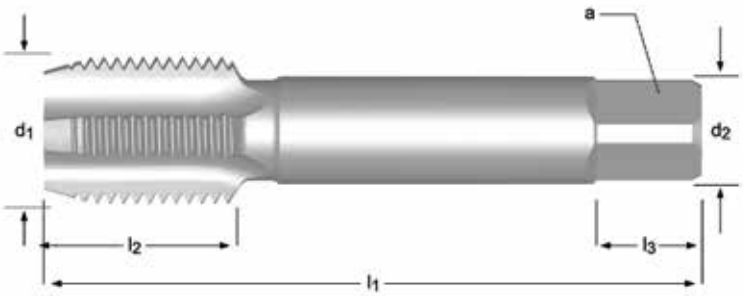

E547

1/8 - 2"

G(BSP)	TPI	d_1 nom mm	l_1 mm	l_2 mm	d_2 Ø mm	a mm	l_3 mm	z		E547
1/8	28	9.728	59	15	8.0	8.0	9	4	8.8	E5471/8NO1
1/8	28	9.728	59	15	8.0	6.3	9	4	8.8	E5471/8NO2
1/8	28	9.728	59	15	8.0	6.3	9	4	8.8	E5471/8NO3
1/8	28	9.728	59	15	8.0	6.3	9	4	8.8	E5471/8NO7
1/4	19	13.157	67	19	10.0	8.0	11	4	11.8	E5471/4NO1
1/4	19	13.157	67	19	10.0	8.0	11	4	11.8	E5471/4NO2
1/4	19	13.157	67	19	10.0	8.0	11	4	11.8	E5471/4NO3
1/4	19	13.157	67	19	10.0	8.0	11	4	11.8	E5471/4NO7
3/8	19	16.662	75	21	12.5	10.0	13	4	15.25	E5473/8NO1
3/8	19	16.662	75	21	12.5	10.0	13	4	15.25	E5473/8NO2
3/8	19	16.662	75	21	12.5	10.0	13	4	15.25	E5473/8NO3
3/8	19	16.662	75	21	12.5	10.0	13	4	15.25	E5473/8NO7
1/2	14	20.955	87	26	16.0	12.5	16	4	19	E5471/2NO1
1/2	14	20.955	87	26	16.0	12.5	16	4	19	E5471/2NO2
1/2	14	20.955	87	26	16.0	12.5	16	4	19	E5471/2NO3
1/2	14	20.955	87	26	16.0	12.5	16	4	19	E5471/2NO7
5/8	14	22.911	91	26	18.0	14.0	18	4	21	E5475/8NO1
5/8	14	22.911	91	26	18.0	14.0	18	4	21	E5475/8NO2
5/8	14	22.911	91	26	18.0	14.0	18	4	21	E5475/8NO3
5/8	14	22.911	91	26	18.0	14.0	18	4	21	E5475/8NO7
3/4	14	26.441	96	28	20.0	16.0	20	4	24.5	E5473/4NO1
3/4	14	26.441	96	28	20.0	16.0	20	4	24.5	E5473/4NO2
3/4	14	26.441	96	28	20.0	16.0	20	4	24.5	E5473/4NO3
3/4	14	26.441	96	28	20.0	16.0	20	4	24.5	E5473/4NO7
7/8	14	30.201	102	29	22.4	18.0	22	4	28.25	E5477/8NO1
7/8	14	30.201	102	29	22.4	18.0	22	4	28.25	E5477/8NO2
7/8	14	30.201	102	29	22.4	18.0	22	4	28.25	E5477/8NO3
1"	11	33.249	109	33	25.0	20.0	24	4	30.75	E5471NO1
1"	11	33.249	109	33	25.0	20.0	24	4	30.75	E5471NO2
1"	11	33.249	109	33	25.0	20.0	24	4	30.75	E5471NO3
1.1/4	11	41.910	119	36	31.5	25.0	28	6	39.5	E5471.1/4NO1
1.1/4	11	41.910	119	36	31.5	25.0	28	6	39.5	E5471.1/4NO2
1.1/4	11	41.910	119	36	31.5	25.0	28	6	39.5	E5471.1/4NO3
1.1/2	11	47.803	125	37	35.5	28.0	31	6	45	E5471.1/2NO1
1.1/2	11	47.803	125	37	35.5	28.0	31	6	45	E5471.1/2NO2
1.1/2	11	47.803	125	37	35.5	28.0	31	6	45	E5471.1/2NO3
2"	11	59.614	140	41	40.0	31.5	34	6	57	E5472NO1
2"	11	59.614	140	41	40.0	31.5	34	6	57	E5472NO2
2"	11	59.614	140	41	40.0	31.5	34	6	57	E5472NO3

NO1 - NO9
219

EP40
EP41

- G(BSP) 机用螺尖丝锥
- G(BSP) Macho Máquina Ponta Helicoidal
- G(BSP) Machos de máquina Entrada en hélice
- G(BSP) Machine Tap Spiral Point

Do vyprodání skladu dodáváno v HSS-E

Поддерживается в HSS-E до складирования новой продукции

Do wyczerpania obecnych zapasów magazynowych dostepny ze stali HSS-E

Do vypredania skladu dodávané v HSS-E

EP40	▪	1.1	1.2	1.3	1.4	1.5	6.1	6.3	7.1	7.2	7.3	7.4
	•	1.6	3.1	3.2	3.3	3.4	4.1	4.2	5.1	5.2	6.2	8.1
EP41	▪	1.1	1.2	1.3	1.4	1.5						
	•	1.6	2.1	2.2	2.3	3.1	3.2	3.3	3.4			

EP40 G | DIN 5156 | Normal | 2.5XD | HSS-E PM | B 3.5-5

EP41 G | DIN 5156 | Normal | 2.5XD | HSS-E PM | B 3.5-5 | ST

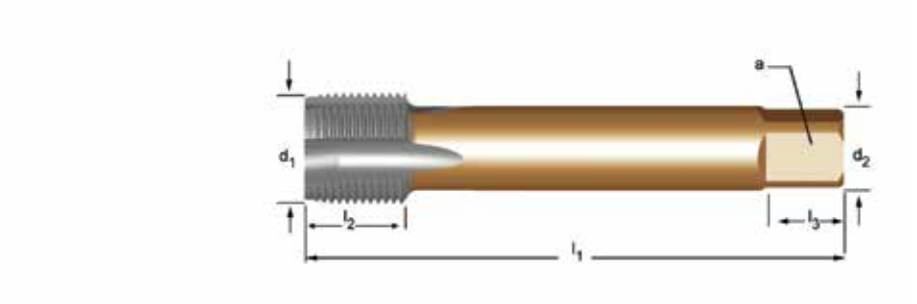

EP40	EP41
	
1/8 - 1“	1/8 - 1“

G(BSP)	TPI	d_1 nom mm	l_1 mm	l_2 mm	d_2 Ø mm	a mm	l_3 mm	z		EP40	EP41
1/8	28	9.728	90	18	7.0	5.5	8	3	8.8	EP401/8	EP411/8
1/4	19	13.157	100	21	11.0	9.0	12	3	11.8	EP401/4	EP411/4
3/8	19	16.662	100	21	12.0	9.0	12	4	15.25	EP403/8	EP413/8
1/2	14	20.955	125	24	16.0	12.0	15	4	19.0	EP401/2	EP411/2
5/8	14	22.911	125	24	18.0	14.5	17	4	21	EP405/8	EP415/8
3/4	14	26.441	140	28	20.0	16.0	19	4	24.5	EP403/4	EP413/4
7/8	14	30.201	150	28	22.0	18.0	21	4	28.25	EP407/8	EP417/8
1“	11	33.249	160	30	25.0	20.0	23	4	30.75	EP401	EP411

E041

- G(BSP) 机用螺尖丝锥
- G(BSP) Macho Máquina Ponta Helicoidal
- G(BSP) Machos de máquina Entrada en hélice
- G(BSP) Machine Tap Spiral Point

提供HSS-E,直到库存更新至HSS-E PM
Fornecido em HSS-E até disponibilidade do novo estoque
Suministrado en HSS-E hasta disponibilidad de nuevo stock
Supplied in HSS-E until new stock available

E041 ▪ 1.1 1.2 1.3 1.4 1.5
• 1.6 2.1 2.2 2.3 3.1 3.2 3.3 3.4

E041 G | DORMER ISO | Normal | 2.5XD | HSS-E PM | B 3.5-5 | ST

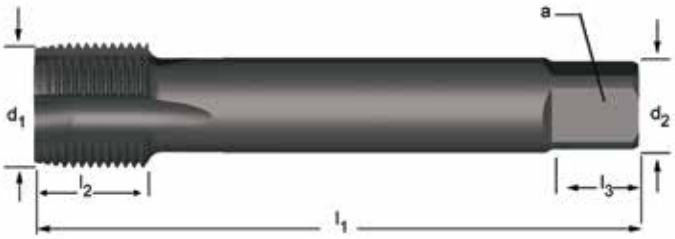

E041

1/8 - 3/4

G(BSP)	TPI	d_1 nom mm	l_1 mm	l_2 mm	d_2 Ø mm	a mm	l_3 mm	z		E041
1/8	28	9.728	90	15	8.0	6.3	9	3	8.80	E0411/8
1/4	19	13.157	100	19	10.0	8.0	11	3	11.80	E0411/4
3/8	19	16.662	100	21	12.5	10.0	13	3	15.25	E0413/8
1/2	14	20.955	125	26	16.0	12.5	16	4	19.00	E0411/2
3/4	14	26.441	140	28	20.0	16.0	20	4	24.50	E0413/4

EX40
EX41

- G(BSP) 机用丝锥 螺旋槽 45°
- G(BSP) Macho Máquina Canal Helicoidal 45°
- G(BSP) Machos de máquina Estrías helicoidales a 45°
- G(BSP) Machine Tap Spiral Flute 45°

提供HSS-E,直到库存更新至HSS-E PM

Fornecido em HSS-E até disponibilidade do novo estoque

Suministrado en HSS-E hasta disponibilidad de nuevo stock

Supplied in HSS-E until new stock available

EX40	■	1.1 1.2 1.3 1.4 1.5 7.1 7.2 7.3 7.4
	●	4.1 4.2 5.1 5.2 8.1
EX41	■	1.1 1.2 1.3 1.4 1.5 2.1 2.2
	●	2.3

EX40	G	DIN 5156	Normal		2.5XD	HSS-E PM	C 2-3	λ45°			
EX41	G	DIN 5156	Normal		2.5XD	HSS-E PM	C 2-3	λ45°		ST	

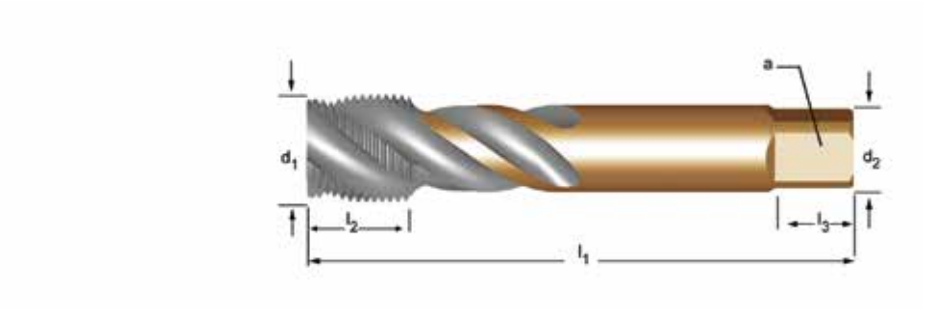

EX40	EX41
	
1/8 - 1.1/2	1/8 - 1.1/2

G(BSP)	TPI	d_1 nom mm	l_1 mm	l_2 mm	d_2 Ø mm	◪ a mm	l_3 mm	z	↔	EX40	EX41
1/8	28	9.728	90	13	7.0	5.5	8	3	8.8	EX401/8	EX411/8
1/4	19	13.157	100	15	11.0	9.0	12	3	11.8	EX401/4	EX411/4
3/8	19	16.662	100	15	12.0	9.0	12	4	15.25	EX403/8	EX413/8
1/2	14	20.955	125	18	16.0	12.0	15	4	19.0	EX401/2	EX411/2
5/8	14	22.911	125	18	18.0	14.5	17	4	21	EX405/8	EX415/8
3/4	14	26.441	140	20	20.0	16.0	19	4	24.5	EX403/4	EX413/4
7/8	14	30.201	150	20	22.0	18.0	21	4	28.25	EX407/8	EX417/8
1“	11	33.249	160	22	25.0	20.0	23	4	30.75	EX401	EX411
1.1/8	11	37.897	170	22	28.0	22.0	25	4	35	EX401.1/8	EX411.1/8
1.1/4	11	41.910	170	22	32.0	24.0	27	4	39.5	EX401.1/4 [1]	EX411.1/4 [1]
1.1/2	11	47.803	190	23	36.0	29.0	32	4	45	EX401.1/2 [1]	EX411.1/2 [1]

[1] HSS-E

E382

- G(BSP) 机用45°螺旋槽丝锥
- G(BSP) Macho Máquina Canal Helicoidal 40º Shark - Anel Azul
- G(BSP) Macho de máquina helicoidal 40º Shark (Anillo Azul)
- G(BSP) Machine Tap Spiral Flute 40°, Blue Shark

E382 ▪ 2.1 2.2 2.3
• 1.5

E382 G | DIN 5156 | Normal | 2XD | HSS-E PM | C 2-3 | λ40° | ST

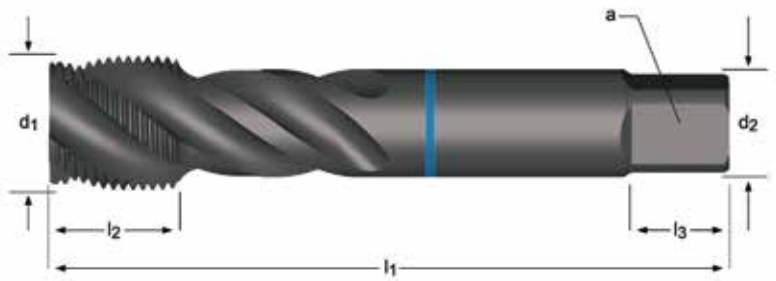

E382

SHARK LINE

1/8 - 1“

G(BSP)	TPI	d_1 nom mm	l_1 mm	l_2 mm	d_2 Ø mm	a mm	l_3 mm	z	↔	E382
1/8	28	9.73	90	12	7.0	5.5	8	3	8.8	E3821/8
1/4	19	13.16	100	15	11.0	9.0	12	4	11.8	E3821/4
3/8	19	16.66	100	15	12.0	9.0	12	4	15.25	E3823/8
1/2	14	20.96	125	24	16.0	12.0	15	4	19.0	E3821/2
3/4	14	26.44	140	20	20.0	16.0	19	4	24.5	E3823/4
1“	11	33.25	160	24	25.0	20.0	23	4	30.75	E3821

E043

- G(BSP) 机用45°螺旋槽丝锥
- G(BSP) Macho Máquina Canal Helicoidal 45°
- G(BSP) Machos de máquina Estrías helicoidales a 45°
- G(BSP) Machine Tap Spiral Flute 45°

提供HSS-E,直到库存更新至HSS-E PM
Fornecido em HSS-E até disponibilidade do novo estoque
Suministrado en HSS-E hasta disponibilidad de nuevo stock
Supplied in HSS-E until new stock available

E043 ▪ 1.1 1.2 1.3 1.4 1.5
• 1.6 2.1 2.2 2.3

E043 G | DORMER ISO | Normal | 2.5XD | HSS-E PM | C 2-3 | λ45° | ST

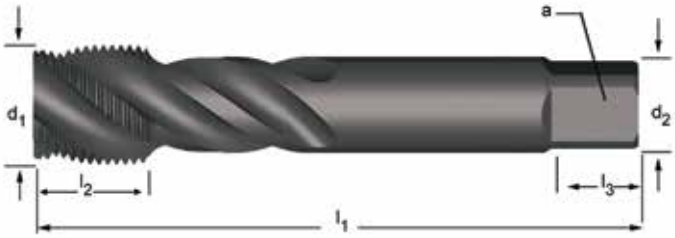

E043

1/8 - 3/4

G(BSP)	TPI	d_1 nom mm	l_1 mm	l_2 mm	d_2 Ø mm	a mm	l_3 mm	z	↔	E043
1/8	28	9.728	90	15	8.0	6.3	9	3	8.80	E0431/8
1/4	19	13.157	100	19	10.0	8.0	11	3	11.80	E0431/4
3/8	19	16.662	100	21	12.5	10.0	13	4	15.25	E0433/8
1/2	14	20.955	125	26	16.0	12.5	16	4	19.00	E0431/2
3/4	14	26.441	140	28	20.0	16.0	20	4	24.50	E0433/4

E620

- EGM 机用直槽丝锥
- EGM Macho Máquina Canal Reto
- EGM Machos de máquina Estrías rectas
- EGM Machine Tap Straight Flute

E620	•	1.1	1.2	1.3	1.4	1.5	3.1	3.2	3.3	3.4	6.1	6.2	6.3	6.4	7.2	7.3	7.4	8.2	8.3

E620 EGM DORMER ISO 6H 1.5XD HSS C 2-3

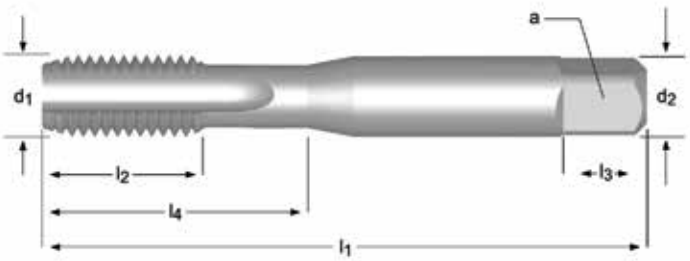

E620

M3 - M16

M	P mm	d_1 nom mm	l_1 mm	l_2 mm	d_2 Ø mm	◪ a mm	l_3 mm	z	↔	l_4 mm	E620
3	0.50	3.65	53	14	4.0	3.15	6	3	3.2	14	E620M3
4	0.70	4.91	58	11	5.0	4.00	7	3	4.2	20	E620M4
5	0.80	6.04	66	13	6.3	5.00	8	3	5.2	26	E620M5
6	1.00	7.30	72	16	8.0	6.30	9	3	6.3	29	E620M6
8	1.25	9.62	80	18	10.0	8.00	11	3	8.4	32	E620M8
10	1.50	11.95	89	22	9.0	7.10	10	3	10.5	-	E620M10
12	1.75	14.27	95	24	11.2	9.00	12	4	12.5	-	E620M12
14	2.00	16.60	112	29	14.0	11.20	14	4	14.5	-	E620M14
16	2.00	18.60	112	29	14.0	11.20	14	4	16.5	-	E620M16

E621

- EGM 机用40°螺旋槽丝锥
- EGM Macho Máquina Canal Helicoidal 40°
- EGM Machos de máquina Estrías helicoidales a 40°
- EGM Machine Tap Spiral Flute 40°

E621 • 1.2 1.3 1.4 1.5 2.1 2.2 2.3 5.2 7.1 7.2 7.3 7.4

E621 EGM | DORMER ISO | 6H | 2XD | HSS | C 2-3 | λ40°

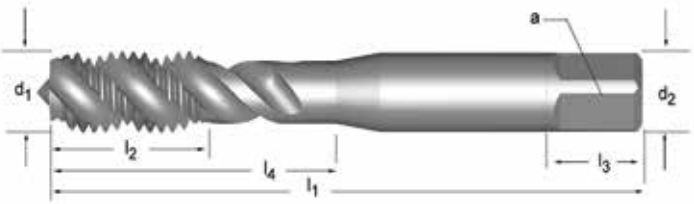

E621

M3 - M16

M	P mm	d_1 nom mm	l_1 mm	l_2 mm	d_2 Ø mm	a mm	l_3 mm	z	↔	l_4 mm	E621
3	0.50	3.65	53	14	4.00	3.15	6	3	3.2	14	E621M3
4	0.70	4.91	58	11	5.00	4.00	7	3	4.2	20	E621M4
5	0.80	6.04	66	13	6.30	5.00	8	3	5.2	26	E621M5
6	1.00	7.3	72	16	8.00	6.30	9	3	6.3	31	E621M6
8	1.25	9.62	80	18	10.00	8.00	11	3	8.4	34	E621M8
10	1.50	11.95	89	22	9.00	7.10	10	3	10.5	-	E621M10
12	1.75	14.27	95	24	11.20	9.00	12	3	12.5	-	E621M12
14	2.00	16.6	112	29	14.00	11.20	14	3	14.5	-	E621M14
16	2.00	18.6	112	29	14.00	11.20	14	3	16.5	-	E621M16

E550

- Rc 机用直槽丝锥
- Rc Macho Máquina Canal Reto
- Rc Machos de máquina Estrías rectas
- Rc Machine Tap Straight Flute

E550																		
	■	3.1	3.2	3.3	3.4	6.1												
	•	1.1	1.2	1.3	1.4	1.5	1.6	2.1	2.2	2.3	6.2	6.3	6.4	7.2	7.3	7.4	8.2	8.3

E550 Rc ISO 2284 Normal 1.5XD HSS C 2-3

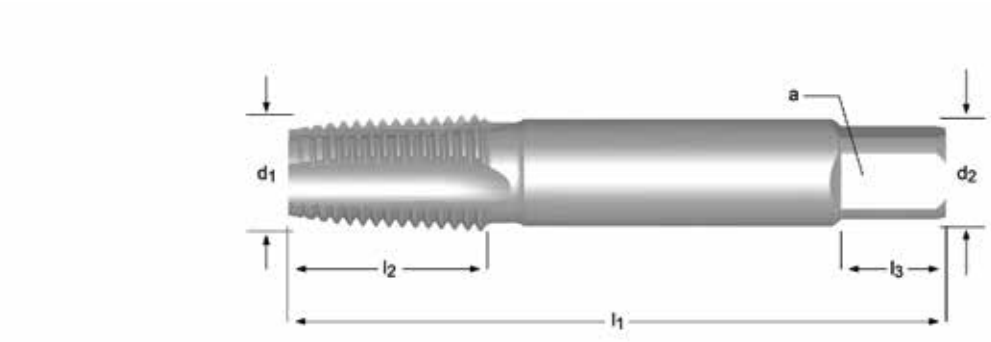

E550

1/8 - 2"

Rc	TPI	d_1 nom mm	l_1 mm	l_2 mm	d_2 Ø mm	◪ a mm	l_3 mm	z	↔	E550
1/8	28	9.728	59	15	8.0	6.3	9	3	8.4	E5501/8
1/8	28	9.728	59	15	8.0	6.3	9	3	8.4	E5501/8NO7
1/4	19	13.157	67	19	10.0	8.0	11	3	11.2	E5501/4
1/4	19	13.157	67	19	10.0	8.0	11	3	11.2	E5501/4NO7
3/8	19	16.662	75	21	12.5	10.0	13	3	14.75	E5503/8
3/8	19	16.662	75	21	12.5	10.0	13	3	14.75	E5503/8NO7
1/2	14	20.955	87	26	16.0	12.5	16	5	18.25	E5501/2
1/2	14	20.955	87	26	16.0	12.5	16	5	18.25	E5501/2NO7
3/4	14	26.441	96	28	20.0	16.0	20	5	23.75	E5503/4
3/4	14	26.441	96	28	20.0	16.0	20	5	23.75	E5503/4NO7
1“	11	33.249	109	33	25.0	20.0	24	5	30	E5501
1.1/4	11	41.910	119	36	31.5	25.0	28	5	38.5	E5501.1/4
1.1/2	11	47.803	125	37	35.5	28.0	31	7	44.5	E5501.1/2
2“	11	59.614	140	41	40.0	31.5	34	7	56	E5502

NO1 - NO9
219

E714

- NPT 机用直槽丝锥
- NPT Macho Máquina Canal Reto
- NPT Machos de máquina Estrías rectas
- NPT Machine Tap Straight Flute

提供HSS-E,直到库存更新至HSS-E PM
Fornecido em HSS-E até disponibilidade do novo estoque
Suministrado en HSS-E hasta disponibilidad de nuevo stock
Supplied in HSS-E until new stock available

E714		
	▪	1.3 1.4
	•	1.1 1.2 1.5 3.1 3.2 3.3 3.4 6.2 7.3 7.4 8.1

E714 NPT DORMER ANSI Normal 1.5XD HSS-E PM C 2-3

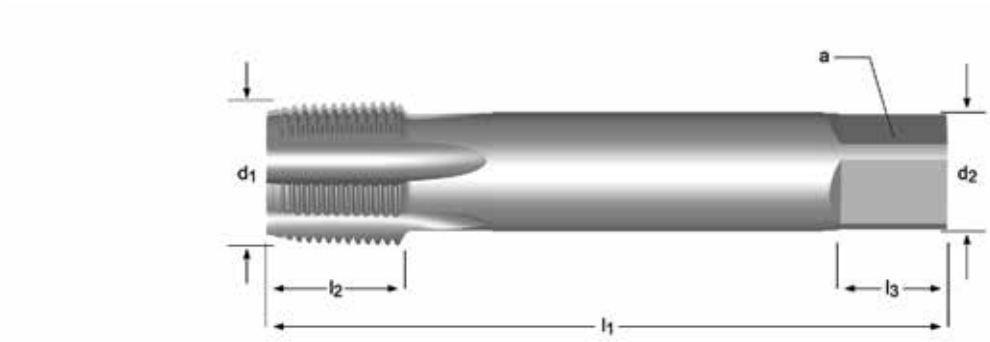

E714

1/8 - 1“

NPT	TPI	d_1 nom mm	l_1 mm	l_2 mm	d_2 Ø mm	◪ a mm	l_3 mm	z	↔	E714
1/8	27	10.23	90	14	11.0	9.0	12	3	8.5	E7141/8
1/4	18	13.60	100	20	14.0	11.0	14	3	11	E7141/4
3/8	18	17.04	110	20	16.0	12.0	15	4	14.5	E7143/8
1/2	14	21.20	125	26	18.0	14.5	17	4	18	E7141/2
3/4	14	26.54	140	26	22.0	18.0	21	5	23	E7143/4
1“	11.5	33.20	150	31	28.0	22.0	25	5	29	E7141

E710
E721

- NPT 机用直槽丝锥
- NPT Macho Máquina Canal Reto
- NPT Machos de máquina Estrías rectas
- NPT Machine Tap Straight Flute

E710	•	1.1	1.2	1.3	1.4	1.5	3.1	3.2	3.3	3.4	6.2	7.3	7.4	8.1
E721	▪	1.3	1.4	3.1	3.2	3.3	3.4							
	•	1.1	1.2	1.5	6.2	7.3	7.4	8.1						

E710	NPT	ANSI B94.9	Normal		1.5XD	HSS	C 2-3				
E721	NPT	ANSI B94.9	Normal		1.5XD	HSS	C 2-3			TiN	

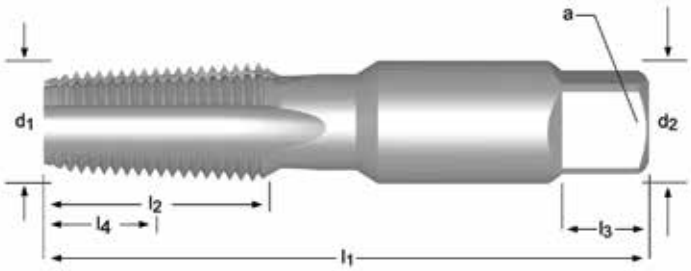

E710	E721
	
1/16 - 2“	1/8 - 1“

NPT	TPI	d_1 nom mm	l_1 mm	l_2 mm	l_4 mm	d_2 Ø mm	a mm	l_3 mm	z	↔	E710	E721
1/16	27	7.94	65	17	11.7	8.1	6.0	8	4	6.3	E7101/16NO3	
1/8	27	10.29	70	19	11.9	11.1	8.3	10	4	8.5	E7101/8	E7211/8
1/8	27	10.29	70	19	11.9	11.1	8.3	10	4	8.5	E7101/8NO7	
1/4	18	13.72	75	27	17.6	14.3	10.7	11	4	11.0	E7101/4	E7211/4
1/4	18	13.72	75	27	17.6	14.3	10.7	11	4	11.0	E7101/4NO7	
3/8	18	17.15	80	27	19.5	17.8	13.5	13	4	14.5	E7103/8	E7213/8
3/8	18	17.15	80	27	19.5	17.8	13.5	13	4	14.5	E7103/8NO7	
1/2	14	21.34	100	35	22.7	17.5	13.1	16	4	18.0	E7101/2	E7211/2
1/2	14	21.34	100	35	22.7	17.5	13.1	16	4	18.0	E7101/2NO7	
3/4	14	26.67	105	35	24.4	23.0	17.2	17	5	23.0	E7103/4	E7213/4
3/4	14	26.67	105	35	24.4	23.0	17.2	17	5	23.0	E7103/4NO7	
1“	11.5	33.40	115	43	29.4	28.6	21.4	21	5	29.0	E7101	E7211
1.1/4	11.5	42.16	125	43	27.7	33.3	25.0	24	5	38.0	E7101.1/4	
1.1/2	11.5	48.26	135	43	28.9	38.1	28.6	25	7	44.0	E7101.1/2	
2“	11.5	60.33	145	43	26.6	47.6	35.7	29	7	56.0	E7102	

NO1 - NO9
219

E711

- NPT 机用跳牙直槽丝锥
- NPT Macho Máquina, Rosca Interrompida Canal Reto
- NPT Machos de máquina, dientes alternos Estrías rectas
- NPT Machine Tap, Interrupted Threads Straight Flute

E711		
	▪	1.3 1.4
	•	1.1 1.2 1.5 3.1 3.2 3.3 3.4 6.2 7.3 7.4 8.1

E711 NPT ANSI B94.9 Normal 1.5XD HSS C 2-3

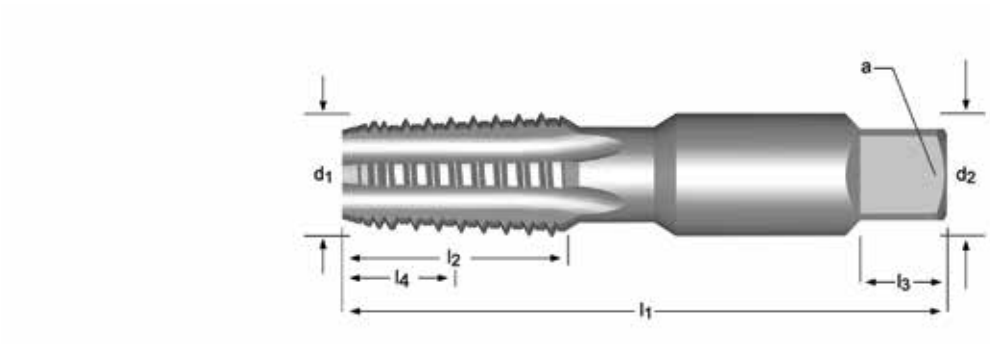

E711

1/8 - 1.1/2

NPT	TPI	d_1 nom mm	l_1 mm	l_2 mm	l_4 mm	d_2 Ø mm	◪ a mm	l_3 mm	z	↔	E711
1/8	27	10.29	70	19	11.9	11.1	8.3	10	5	8.5	E7111/8
1/4	18	13.72	75	27	17.6	14.3	10.7	11	5	11.0	E7111/4
3/8	18	17.15	80	27	19.5	17.8	13.5	13	5	14.5	E7113/8
1/2	14	21.33	100	35	22.7	17.5	13.1	16	5	18.0	E7111/2
3/4	14	26.67	105	35	24.4	23.0	17.2	17	5	23.0	E7113/4
1“	11.5	33.40	115	43	29.4	28.6	21.4	21	5	29.0	E7111
1.1/2	11.5	48.26	135	43	28.9	38.1	28.6	25	7	44.0	E7111.1/2

E653

- NPT 机用27°螺旋槽钻攻复合丝锥
- NPT Broca-Macho Canal Helicoidal 27°
- NPT Combinación broca-macho Estrías helicoidales a 27°
- NPT Combi Taps Spiral Flute 27°

E653 • 1.1 1.2 1.3 1.4 3.2 6.2 6.3 7.1 7.2 8.1

E653 NPT ANSI Normal 1.5XD HSS λ27°

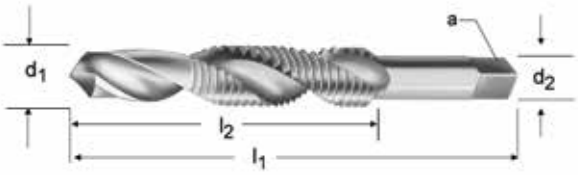

E653

1/8 - 1“

NPT	TPI	d_1 nom Inch	l_1 Inch	l_2 Inch	d_2 Ø Inch	◪ a Inch	z	E653
1/8	27	0.3346	2.7/8	3/4	0.4370	0.3280	2	E6531/8
1/4	18	0.4331	3.5/16	1.1/16	0.5620	0.4210	2	E6531/4
3/8	18	0.5709	3.1/2	1.1/16	0.7000	0.5310	2	E6533/8
1/2	14	0.7087	4.3/8	1.3/8	0.6870	0.5150	2	E6531/2
3/4	14	0.9055	4.9/16	1.3/8	0.9060	0.6790	2	E6533/4
1“	11.5	1.1417	5.3/8	1.3/4	1.1250	0.8430	2	E6531

E712

- NPTF 机用丝锥 直槽
- NPTF Macho Máquina Canal Reto
- NPTF Machos de máquina Estrías rectas
- NPTF Machine Tap Straight Flute

E712		
	▪	1.3 1.4
	•	1.1 1.2 1.5 3.1 3.2 3.3 3.4 6.2 7.3 7.4 8.1

E712 NPTF ANSI B94.9 Normal 1.5XD HSS C 2-3

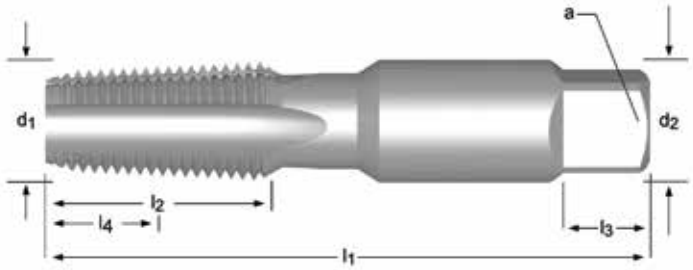

E712

1/16 - 1.1/4

NPTF	TPI	d_1 nom mm	l_1 mm	l_2 mm	l_4 mm	d_2 Ø mm	a mm	l_3 mm	z	↔	E712
1/16	27	7.94	65	17	11.7	8.1	6.0	8	4	6.20	E7121/16
1/8	27	10.29	70	19	11.9	11.1	8.3	10	4	8.40	E7121/8
1/4	18	13.72	75	27	17.6	14.3	10.7	11	4	10.90	E7121/4
3/8	18	17.15	80	27	19.5	17.8	13.5	13	4	14.25	E7123/8
1/2	14	21.34	100	35	22.7	17.5	13.1	16	4	17.75	E7121/2
3/4	14	26.67	105	35	24.4	23.0	17.2	17	5	23.00	E7123/4
1“	11.5	33.40	115	43	29.4	28.6	21.4	21	5	29.00	E7121
1.1/4	11.5	42.16	125	43	27.7	33.4	24.9	23	5	37.75	E7121.1/4

E709
E720

- NPSF 机用直槽丝锥
- NPSF Macho Máquina Canal Reto
- NPSF Machos de máquina Estrías rectas
- NPSF Machine Tap Straight Flute

E709	▪	1.3 1.4
	•	1.1 1.2 1.5 3.1 3.2 3.3 3.4 6.2 7.3 7.4 8.1
E720	▪	1.3 1.4 3.1 3.2 3.3 3.4
	•	1.1 1.2 1.5 6.2 7.3 7.4 8.1

E709	NPSF	ANSI B94.9	Normal		1.5XD	HSS	C 2-3				
E720	NPSF	ANSI B94.9	Normal		1.5XD	HSS	C 2-3			TiN	

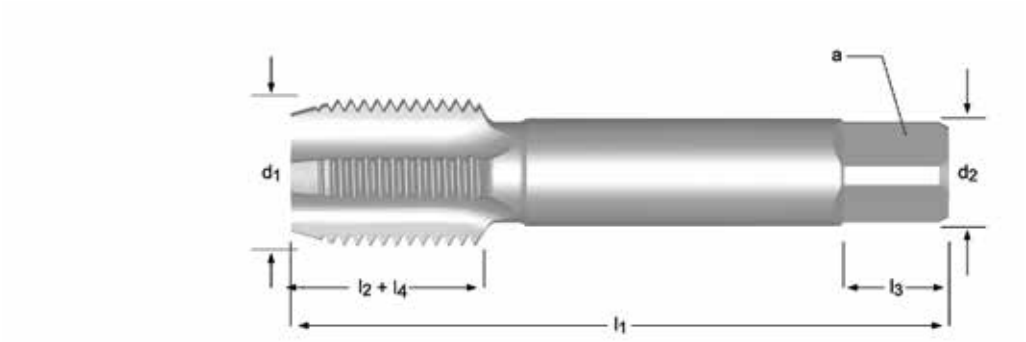

NPSF	TPI	d_1 nom mm	l_1 mm	l_2 mm	l_4 mm	d_2 Ø mm	⧄ a mm	l_3 mm	z	↔	E709	E720
1/8	27	10.29	70	19	19	11.1	8.3	10	4	8.70	E7091/8	E7201/8NO3
1/4	18	13.72	75	27	27	14.3	10.7	11	4	11.30	E7091/4	E7201/4NO3
3/8	18	17.15	80	27	27	17.8	13.5	13	4	14.75	E7093/8	E7203/8NO3
1/2	14	21.34	100	35	-	17.5	13.1	16	4	18.25	E7091/2	E7201/2NO3
3/4	14	26.67	105	35	-	23.0	17.2	17	5	23.50	E7093/4	E7203/4NO3

NO1 - NO9
219

E708

- NPSM 机用直槽丝锥
- NPSM Macho Máquina Canal Reto
- NPSM Machos de máquina Estrías rectas
- NPSM Machine Tap Straight Flute

E708		
	▪	1.3 1.4
	•	1.1 1.2 1.5 3.1 3.2 3.3 3.4 6.2 7.3 7.4 8.1

E708 NPSM ANSI B94.9 Normal 1.5XD HSS C 2-3

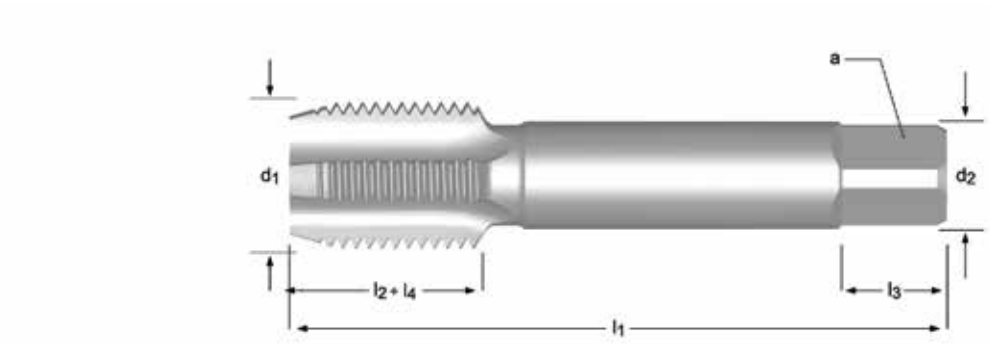

E708

1/8 - 1“

NPSM	TPI	d_1 nom mm	l_1 mm	l_2 mm	l_4 mm	d_2 Ø mm	◪ a mm	l_3 mm	z	↔	E708
1/8	27	10.29	70	19	19	11.1	8.3	10	4	9.1	E7081/8
1/4	18	13.72	75	27	27	14.3	10.7	11	4	12.0	E7081/4
3/8	18	17.15	80	27	27	17.8	13.5	13	4	15.5	E7083/8
1/2	14	21.33	100	35	-	17.5	13.1	16	4	19.0	E7081/2
3/4	14	26.67	105	35	-	23.0	17.2	17	5	24.5	E7083/4
1“	11.5	33.40	115	43	-	28.6	21.4	21	5	30.5	E7081

DORMER

E243

- PG 机用直槽丝锥
- PG Macho Máquina Canal Reto
- PG Machos de máquina Estrías rectas
- PG Machine Tap Straight Flute

E243 • 1.1 1.2 1.3 1.4 1.5 3.1 3.2 3.3 6.2 6.3 7.2 7.3 8.2

E243 PG | DIN 40432 | Normal | 1.5XD | HSS

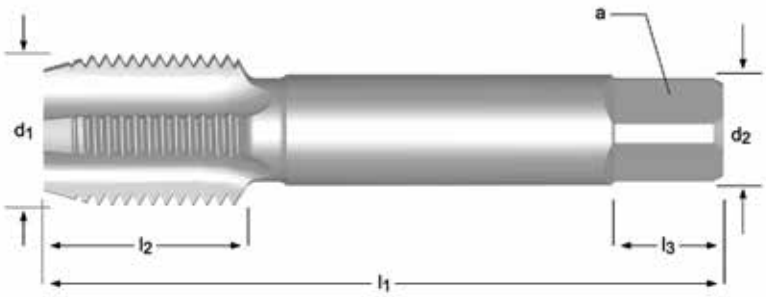

E243

No.7 - No.36

PG	TPI	d_1 nom mm	l_1 mm	l_2 mm	d_2 Ø mm	⧄ a mm	l_3 mm	z	↔	E243
7	20	12.5	70	22	9.0	7.0	10	4	11.4	E243PG7NO2
7	20	12.5	70	22	9.0	7.0	10	4	11.4	E243PG7NO3
9	18	15.2	70	22	12.0	9.0	12	4	13.9	E243PG9NO2
9	18	15.2	70	22	12.0	9.0	12	4	13.9	E243PG9NO3
11	18	18.6	80	22	14.0	11.0	14	4	17.25	E243PG11NO2
11	18	18.6	80	22	14.0	11.0	14	4	17.25	E243PG11NO3
13.5	18	20.4	80	22	16.0	12.0	15	4	19	E243PG13.5NO2
13.5	18	20.4	80	22	16.0	12.0	15	4	19	E243PG13.5NO3
16	18	22.5	80	22	18.0	14.5	17	4	21.25	E243PG16NO2
16	18	22.5	80	22	18.0	14.5	17	4	21.25	E243PG16NO3
21	16	28.3	90	22	22.0	18.0	21	4	27	E243PG21NO2
21	16	28.3	90	22	22.0	18.0	21	4	27	E243PG21NO3
29	16	37.0	100	25	28.0	22.0	25	6	35.5	E243PG29NO2
29	16	37.0	100	25	28.0	22.0	25	6	35.5	E243PG29NO3
36	16	47.0	140	32	36.0	29.0	32	6	45.5	E243PG36NO2
36	16	47.0	140	32	36.0	29.0	32	6	45.5	E243PG36NO3

NO1 - NO9
219

L119

- 公制粗牙丝锥套装
- Jogo de Machos Métricos em Caixa Metálica
- Machos Métricos, caja metálica
- Metric Coarse Taps Set

A=套装类型, B=套装数量, M=套装丝锥型号
A=Tipos no jogo, B=No. no jogo, M=Diâmetros de Machos no jogo
A = Tipos en el juego, B=No. en el Juego, M= Diámetros Machos en el Juego
A=Styles in Set, B=No. in Set, M=Tap diameters in Set

L119

Set

Set	A	B	M	L119
Nr.17	E100	21	E100M3NO8, E100M4NO8, E100M5NO8, E100M6NO8, E100M8NO8, E100M10NO8, E100M12NO8	L11917

L126

- 组合丝锥套装
- Jogo de Brocas Macho em Caixa Metalica
- Conjunto de Macho Broca
- Combi Taps Set

A=套装类型, B=套装数量, M=套装丝锥型号
A=Tipos no jogo, B=No. no jogo, M=Diâmetros de Machos no jogo
A = Tipos en el juego, B=No. en el Juego, M= Diámetros Machos en el Juego
A=Styles in Set, B=No. in Set, M=Tap diameters in Set

L126

Set

Set	A	B	M	L126
650	E650	6	E650M4, E650M5, E650M6, E650M8, E650M10, E650M12	L126650

L113

- ISO 丝锥-钻头套装 — A=套装类型, B=套装数量, M=套装丝锥型号, D=套装钻头型号
- ISO Jogo de Broca + Macho — A=Tipos no jogo, B=No. no jogo, M=Diâmetros de Machos no jogo, D= Diâmetros de Brocas no jogo
- ISO Juego de Broca-Macho — A = Tipos en el juego, B=No. en el Juego, M= Diámetros Machos en el Juego, D= Diámetros Brocas en el Juego
- ISO Tap-Drill Set — A= Styles in Set, B= No. in Set, M= Tap diameters in Set, D= Drill diameters in Set

L113

Set

Set	A	B	M	D	L113
Nr.201	E000 + A002	14	E000M3, E000M4, E000M5, E000M6, E000M8, E000M10, E000M12	A0022.5, A0023.3, A0024.2, A0025.0, A0026.8, A0028.5, A00210.2	L113201
Nr.202	E001 + A002	14	E001M3, E001M4, E001M5, E001M6, E001M8, E001M10, E001M12	A0022.5, A0023.3, A0024.2, A0025.0, A0026.8, A0028.5, A00210.2	L113202
Nr.203	E002 + A002	14	E002M3, E002M4, E002M5, E002M6, E002M8, E002M10, E002M12	A0022.5, A0023.3, A0024.2, A0025.0, A0026.8, A0028.5, A00210.2	L113203
Nr.204	E003 + A002	14	E003M3, E003M4, E003M5, E003M6, E003M8, E003M10, E003M12	A0022.5, A0023.3, A0024.2, A0025.0, A0026.8, A0028.5, A00210.2	L113204

L114

- DIN丝锥-钻头套装 — A=套装类型, B=套装数量, M=套装丝锥型号, D=套装钻头型号
- DIN Jogo de Broca + Macho — A=Tipos no jogo, B=No. no jogo, M=Diâmetros de Machos no jogo, D= Diâmetros de Brocas no jogo
- DIN Juego de Broca-Macho — A = Tipos en el juego, B=No. en el Juego, M= Diámetros Machos en el Juego, D= Diámetros Brocas en el Juego
- DIN Tap-Drill Set — A= Styles in Set, B= No. in Set, M= Tap diameters in Set, D= Drill diameters in Set

L114

Set

Set	A	B	M	D	L114
Nr.301	EP006H + A002	14	EP00M3, EP00M4, EP00M5, EP00M6, EP00M8, EP00M10, EP00M12	A0022.5, A0023.3, A0024.2, A0025.0, A0026.8, A0028.5, A00210.2	L114301
Nr.302	EX006H + A002	14	EX00M3, EX00M4, EX00M5, EX00M6, EX00M8, EX00M10, EX00M12	A0022.5, A0023.3, A0024.2, A0025.0, A0026.8, A0028.5, A00210.2	L114302
Nr.303	E297 + A002 SHARK LINE	14	E297M3, E297M4, E297M5, E297M6, E297M8, E297M10, E297M12	A0022.5, A0023.3, A0024.2, A0025.0, A0026.8, A0028.5, A00210.2	L114303
Nr.304	E298 + A002 SHARK LINE	14	E298M3, E298M4, E298M5, E298M6, E298M8, E298M10, E298M12	A0022.5, A0023.3, A0024.2, A0025.0, A0026.8, A0028.5, A00210.2	L114304
Nr.305	E238 + A108 SHARK LINE	14	E238M3, E238M4, E238M5, E238M6, E238M8, E238M10, E238M12	A1082.5, A1083.3, A1084.2, A1085.0, A1086.8, A1088.5, A10810.2	L114305
Nr.306	E240 + A108 SHARK LINE	14	E240M3, E240M4, E240M5, E240M6, E240M8, E240M10, E240M12	A1082.5, A1083.3, A1084.2, A1085.0, A1086.8, A1088.5, A10810.2	L114306

L115

- 手用丝锥钻头套装
- Jogo de Broca + Macho Manual
- Juego de machos de mano y brocas
- Hand Tap-Drill Set

A=套装类型, B=套装数量, M=套装丝锥型号, D=套装钻头型号

A=Tipos no jogo, B=No. no jogo, M=Diâmetros de Machos no jogo, D= Diâmetros de Brocas no jogo

A = Tipos en el juego, B=No. en el Juego, M= Diámetros Machos en el Juego, D= Diámetros Brocas en el Juego

A= Styles in Set, B= No. in Set, M= Tap diameters in Set, D= Drill diameters in Set

L115

Set

Set	A	B	M	D	L115
Nr.100	E500 + A022	21	E500M3NO2, E500M3NO3, E500M4NO2, E500M4NO3, E500M5NO2, E500M5NO3, E500M6NO2, E500M6NO3, E500M8NO2, E500M8NO3, E500M10NO2, E500M10NO3, E500M12NO2, E500M12NO3	A0222.5, A0223.3, A0224.2, A0225.0, A0226.8, A0228.5, A02210.2	L115100
Nr.101	E500 + A002	14	E500M3NO3, E500M4NO3, E500M5NO3, E500M6NO3, E500M8NO3, E500M10NO3, E500M12NO3	A0022.5, A0023.3, A0024.2, A0025.0, A0026.8, A0028.5, A00210.2	L115101

L000

- 手用螺孔钻套装（2件） A=套装类型, B=套装数量, M=套装丝锥型号, D=套装钻头型号
- Conjunto de brocas - Macho manual (2 peças) A=Tipos no jogo, B=No. no jogo, M=Diâmetros de Machos no jogo, D= Diâmetros de Brocas no jogo
- Hand Tap-Drill Set (2 Piece) A = Tipos en el juego, B=No. en el Juego, M= Diámetros Machos en el Juego, D= Diámetros Brocas en el Juego
- Hand Tap-Drill Set (2 Piece) A= Styles in Set, B= No. in Set, M= Tap diameters in Set, D= Drill diameters in Set

L000

Set

Nr.	A	B	M	D	L000
Nr.1	E500 + A002	2	E500M3NO2	A0022.5	L000E500M3NO2XA002
Nr.2	E500 + A002	2	E500M4NO2	A0023.3	L000E500M4NO2XA002
Nr.3	E500 + A002	2	E500M5NO2	A0024.2	L000E500M5NO2XA002
Nr.4	E500 + A002	2	E500M6NO2	A0025.0	L000E500M6NO2XA002
Nr.5	E500 + A002	2	E500M8NO2	A0026.8	L000E500M8NO2XA002
Nr.6	E500 + A002	2	E500M10NO2	A0028.5	L000E500M10NO2XA002
Nr.7	E500 + A002	2	E500M12NO2	A00210.2	L000E500M12NO2XA002
Nr.8	E500 + A002	2	E500M3NO3	A0022.5	L000E500M3NO3XA002
Nr.9	E500 + A002	2	E500M4NO3	A0023.3	L000E500M4NO3XA002
Nr.10	E500 + A002	2	E500M5NO3	A0024.2	L000E500M5NO3XA002
Nr.11	E500 + A002	2	E500M6NO3	A0025.0	L000E500M6NO3XA002
Nr.12	E500 + A002	2	E500M8NO3	A0026.8	L000E500M8NO3XA002
Nr.13	E500 + A002	2	E500M10NO3	A0028.5	L000E500M10NO3XA002
Nr.14	E500 + A002	2	E500M12NO3	A00210.2	L000E500M12NO3XA002

L001

- DIN螺孔钻套装（2件） A=套装类型, B=套装数量, M=套装丝锥型号, D=套装钻头型号
- Conjunto de brocas - Macho DIN (2 peças) A=Tipos no jogo, B=B=No. no jogo, M=Diâmetros de Machos no jogo, D= Diâmetros de Brocas no jogo
- DIN Tap-Drill Set (2 Piece) A = Tipos en el juego, B=No. en el Juego, M= Diámetros Machos en el Juego, D= Diámetros Brocas en el Juego
- DIN Tap-Drill Set (2 Piece) A= Styles in Set, B= No. in Set, M= Tap diameters in Set, D= Drill diameters in Set

Nr.	A	B	M	D	L001
Nr.1	EP006H + A002	2	EP00M3	A0022.5	L001EP00M3XA002
Nr.2	EP006H + A002	2	EP00M4	A0023.3	L001EP00M4XA002
Nr.3	EP006H + A002	2	EP00M5	A0024.2	L001EP00M5XA002
Nr.4	EP006H + A002	2	EP00M6	A0025.0	L001EP00M6XA002
Nr.5	EP006H + A002	2	EP00M8	A0026.8	L001EP00M8XA002
Nr.6	EP006H + A002	2	EP00M10	A0028.5	L001EP00M10XA002
Nr.7	EP006H + A002	2	EP00M12	A00210.2	L001EP00M12XA002
Nr.8	EX006H + A002	2	EX00M3	A0022.5	L001EX00M3XA002
Nr.9	EX006H + A002	2	EX00M4	A0023.3	L001EX00M4XA002
Nr.10	EX006H + A002	2	EX00M5	A0024.2	L001EX00M5XA002
Nr.11	EX006H + A002	2	EX00M6	A0025.0	L001EX00M6XA002
Nr.12	EX006H + A002	2	EX00M8	A0026.8	L001EX00M8XA002
Nr.13	EX006H + A002	2	EX00M10	A0028.5	L001EX00M10XA002
Nr.14	EX006H + A002	2	EX00M12	A00210.2	L001EX00M12XA002

L002

- ISO螺孔钻套装（2件） A=套装类型, B=套装数量, M=套装丝锥型号, D=套装钻头型号
- Conjunto de brocas - Macho ISO (2 peças) A=Tipos no jogo, B=No. no jogo, M=Diâmetros de Machos no jogo, D= Diâmetros de Brocas no jogo
- ISO Tap-Drill Set (2 Piece) A = Tipos en el juego, B=No. en el Juego, M= Diámetros Machos en el Juego, D= Diámetros Brocas en el Juego
- ISO Tap-Drill Set (2 Piece) A= Styles in Set, B= No. in Set, M= Tap diameters in Set, D= Drill diameters in Set

Nr.	A	B	M	D	L002
Nr.1	E000 + A002	2	E000M3	A0022.5	L002E000M3XA002
Nr.2	E000 + A002	2	E000M4	A0023.3	L002E000M4XA002
Nr.3	E000 + A002	2	E000M5	A0024.2	L002E000M5XA002
Nr.4	E000 + A002	2	E000M6	A0025.0	L002E000M6XA002
Nr.5	E000 + A002	2	E000M8	A0026.8	L002E000M8XA002
Nr.6	E000 + A002	2	E000M10	A0028.5	L002E000M10XA002
Nr.7	E000 + A002	2	E000M12	A00210.2	L002E000M12XA002
Nr.8	E002 + A002	2	E002M3	A0022.5	L002E002M3XA002
Nr.9	E002 + A002	2	E002M4	A0023.3	L002E002M4XA002
Nr.10	E002 + A002	2	E002M5	A0024.2	L002E002M5XA002
Nr.11	E002 + A002	2	E002M6	A0025.0	L002E002M6XA002
Nr.12	E002 + A002	2	E002M8	A0026.8	L002E002M8XA002
Nr.13	E002 + A002	2	E002M10	A0028.5	L002E002M10XA002
Nr.14	E002 + A002	2	E002M12	A00210.2	L002E002M12XA002

L120

- 成套丝锥
- Estojo de Roscagem, Cx. Metálica
- Estuche de roscado en caja metálica
- Threading Equipment Set

A= 套装规格, B= 套装里的数量, M= 套装丝锥型号, F= 套装模具型号, L112= 套装里丝锥扳手, L110= 套装模具库存

A=Tipos no jogo, B=No. no jogo, M=Diâmetros de Machos no jogo, F= Diâmetros de Cossinetes no jogo, L112= Desandador Ajustável no jogo, L110= Desandador para Cossinites no jogo

A = Tipos en el juego, B=No. en el Juego, M= Diámetros Machos en el Juego, F= Diámetros Terrajas en el Juego, L112 - en el Juego, L110 - en el Juego

A= Styles in Set, B= No. in Set, M= Tap diameters in Set, F= Die diameters in Set, L112= Tap wrenches in Set, L110= Die stocks in Set

L120

Set

Set	A	B	M	F	L112	L110	L120
21	E100 + F100 + L112 + L110	21	E100M3NO8, E100M4NO8, E100M5NO8, E100M6NO8, E100M8NO8, E100M10NO8, E100M12NO8	F100M3, F100M4, F100M5, F100M6, F100M8, F100M10, F100M12	L112NO1.1/2, L112NO3	L1102A, L1102B, L1103, L1104, L1105	L12021
30	E100 + F100 + L112 + L110	30	E100M3NO8, E100M4NO8, E100M5NO8, E100M6NO8, E100M8NO8, E100M10NO8, E100M12NO8, E100M14NO8, E100M16NO8, E100M18NO8, E100M20NO8	F100M3, F100M4, F100M5, F100M6, F100M8, F100M10, F100M12, F100M14, F100M16, F100M18, F100M20	L112NO1.1/2, L112NO4	L1102A, L1102B, L1103, L1104, L1105, L1106	L12030
HS-2M	E500 + F300 + L112 + L110	23	E500M2NO1, E500M2NO3, E500M2.5NO1, E500M2.5NO3, E500M3NO1, E500M3NO3, E500M3.5NO1, E500M3.5NO3, E500M4NO1, E500M4NO3, E500M5NO1, E500M5NO3, E500M6NO1, E500M6NO3	F300M2X13/16, F300M2.5X13/16, F300M3X13/16, F300M3.5X13/16, F300M4X13/16, F300M5X13/16, F300M6X13/16	L112BT1	L11013/16	L1202M
HS-4M	E500 + F300 + L112 + L110	32	E500M5NO1, E500M5NO3, E500M6NO1, E500M6NO3, E500M7NO1, E500M7NO3, E500M8NO1, E500M8NO3, E500M9NO1, E500M9NO3, E500M10NO1, E500M10NO3, E500M11NO1, E500M11NO3, E500M12NO1, E500M12NO3	F300M5X13/16, F300M6X13/16, F300M7X13/16, F300M8X1.5/16, F300M9X1.5/16, F300M10X1.5/16, F300M11X1.5/16, F300M12X1.5/16, F300M5X13/16, F300M6X13/16, F300M7X13/16, F300M8X1.5/16, F300M9X1.5/16	L112BT2	L11013/16, L1101.5/16	L1204M

Set	A	B	M	F	L112	L110	L120
HS-8M	E500 + F300 + L112 + L110	17	E500M2NO1, E500M2NO3, E500M3NO1, E500M3NO3, E500M4NO1, E500M4NO3, E500M5NO1, E500M5NO3, E500M6NO1, E500M6NO3	F300M2X13/16, F300M3X13/16, F300M4X13/16, F300M5X13/16, F300M6X13/16	L112BT1	L11013/16	L1208M
HS-10M	E500 + F300 + L112 + L110	27	E500M3NO1, E500M3NO3, E500M4NO1, E500M4NO3, E500M5NO1, E500M5NO3, E500M6NO1, E500M6NO3, E500M7NO1, E500M7NO3, E500M8NO1, E500M8NO3, E500M9NO1, E500M9NO3, E500M10NO1, E500M10NO3	F300M3X13/16, F300M4X13/16, F300M5X13/16, F300M6X1, F300M7X1, F300M8X1, F300M9X1, F300M10X1	L112BT2	L11013/16, L1101INCH	L12010M
HS-12M	E500 + F300 + L112 + L110	35	E500M2NO1, E500M2NO3, E500M3NO1, E500M3NO3, E500M4NO1, E500M4NO3, E500M5NO1, E500M5NO3, E500M6NO1, E500M6NO3, E500M7NO1, E500M7NO3, E500M8NO1, E500M8NO3, E500M9NO1, E500M9NO3, E500M10NO1, E500M10NO3, E500M12NO1, E500M12NO3	F300M2X13/16, F300M3X13/16, F300M4X13/16, F300M5X13/16, F300M6X13/16, F300M7X13/16, F300M8X1, F300M9X1, F300M10X1, F300M12X1.5/16	L112BT1, L112BT2	L11013/16, L1101INCH, L1101.5/16	L12012M
HS-14M	E500 + F300 + L112 + L110	34	E500M6NO1, E500M6NO3, E500M7NO1, E500M7NO3, E500M8NO1, E500M8NO3, E500M9NO1, E500M9NO3, E500M10NO1, E500M10NO3, E500M12NO1, E500M12NO3, E500M14NO1, E500M14NO3, E500M16NO1, E500M16NO3, E500M18NO1, E500M18NO3, E500M20NO1, E500M20NO3	F300M6X1, F300M7X1, F300M8X1, F300M9X1, F300M10X1, F300M12X1.5/16, F300M14X1.5/16, F300M16X1.1/2, F300M18X1.1/2, F300M20X1.1/2	L112NO3	L1101INCH, L1101.5/16, L1101.1/2	L12014M
HS-30UNC	E515 + F320 + L112 + L110	18	E5151/2NO1, E5151/2NO3, E5151/4NO1, E5151/4NO3, E5155/16NO1, E5155/16NO3, E5153/8NO1, E5153/8NO3, E5157/16NO1, E5157/16NO3	F3201/4X1, F3205/16X1, F3207/16X1.5/16, F3203/8X1, F3201/2X1.5/16	L112BT2	L1101INCH, L1101.5/16	L12030UNC
HS-32UNC	E515 + F320 + L112 + L110	27	E5151/2NO1, E5151/2NO3, E5151/4NO1, E5151/4NO3, E5155/16NO1, E5155/16NO3, E5153/8NO1, E5153/8NO3, E5157/16NO1, E5157/16NO3, E5155/8NO1, E5155/8NO3, E5153/4NO1, E5153/4NO3	F3201/4X1, F3205/16X1, F3207/16X1.5/16, F3203/8X1, F3207/16X1.1/2, F3201/2X1.5/16, F3201/2X1.1/2, F3205/8X1.1/2, F3203/4X1.1/2	L112BT2, L112NO3	L1101INCH, L1101.1/2	L12032UNC

Set	A	B	M	F	L112	L110	L120
HS-24UNF	E524 + F330 + L112 + L110	18	E5241/2NO1, E5241/2NO3, E5241/4NO1, E5241/4NO3, E5245/16NO1, E5245/16NO3, E5243/8NO1, E5243/8NO3, E5247/16NO1, E5247/16NO3	F3301/4X1, F3305/16X1, F3307/16X1.5/16, F3303/8X1, F3301/2X1.5/16	L112BT2	L1101INCH, L1101.5/16	L12024UNF
HS-26UNF	E524 + F330 + L112 + L110	25	E5241/2NO1, E5241/2NO3, E5241/4NO1, E5241/4NO3, E5245/16NO1, E5245/16NO3, E5243/8NO1, E5243/8NO3, E5247/16NO1, E5247/16NO3, E5245/8NO1, E5245/8NO3, E5243/4NO1, E5243/4NO3	F3301/4X1, F3305/16X1, F3303/8X1, F3307/16X1.1/2, F3301/2X1.1/2, F3305/8X1.1/2, F3303/4X1.1/2	L112BT2, L112NO3	L1101INCH, L1101.1/2	L12026UNF

L110

- 板牙扳手
- Desandador para Cossinetes
- Maneta para Terrajas “ Portaterrajas”
- Die Stocks

L110

16.00 - 4“

Nr.	Ø x H	L110
1“	16 x 5	L1101
2a	20 x 5	L1102A
2b	20 x 7	L1102B
3	25 x 9	L1103
4“	30 x 11	L1104
5	38 x 14	L1105
5f	38 x 10	L1105F
6	45 x 18	L1106
6f	45 x 14	L1106F
7	55 x 22	L1107
7f	55 x 16	L1107F
8	65 x 25	L1108
8f	65 x 18	L1108F
9	75 x 30	L1109
9f	75 x 20	L1109F
10	90 x 36	L11010
10f	90 x 22	L11010F
	13/16 x 1/4	L11013/16
	1 x 3/8	L1101INCH
	1.5/16 x 7/16	L1101.5/16
	1.1/2 x 1/2	L1101.1/2
	2 x 5/8	L1102INCH
	2.1/4 x 11/16	L1102.1/4
	3 x 7/8	L1103INCH
	4 x 1	L1104INCH

L112

- 丝锥扳手
- Desandador Ajustável
- Portamachos regulable
- Tap Wrenches

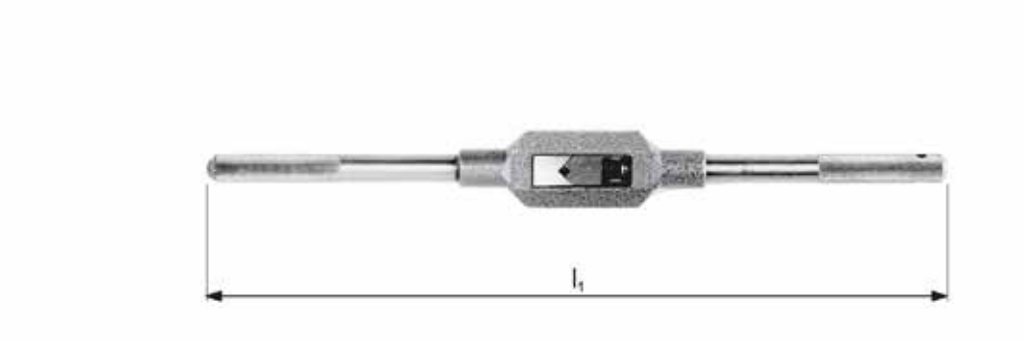

L112

BT1 - No.7

Nr.	l_1 mm	⧄ a mm	⧄ a Inch	Tap Range (M)	Tap Range (Inch)	L112
BT1	105	1.0 - 6.5	0.0394 - 0.2559	M1 - M8	No. 0 - 5/16	L112BT1
BT2	162	1.0 - 10.0	0.0394 - 0.3937	M1 - M14	No. 0 - 5/8	L112BT2
0	130	2.0 - 5.0	0.0787 - 0.1969	M1 - M5	No. 0 - 1/4	L112NO0
1.1/2	205	2.1 - 8.0	0.0827 - 0.3150	M2.2 - M12	No. 0 - 1/2	L112NO1.1/2
3	380	4.9 - 12.0	0.1929 - 0.4724	M5 - M20	5/16 - 3/4	L112NO3
4	500	5.5 - 16.0	0.2165 - 0.6299	M7 - M30	5/16 - 1“	L112NO4
6	1000	11.0 - 24.0	0.4331 - 0.9449	M18 - M42	3/4 - 1.1/2	L112NO6
7	1250	16.0 - 32.0	0.6299 - 1.2598	M27 - M48	1.1/8 - 2“	L112NO7

345 - 366

DORMER

螺纹形式	Tipo de Rosca	Forma de Rosca	Thread form
标准	Norma	Estándar	Standard
公差	Tolerância	Tolerancia	Tolerance
倒锥	Chanfro	Chaflán	Chamfer
材料	Material	Material	Material
加工方向	Direção	Dirección	Direction
涂层	Tratamento	Tratamiento superficial	Coating

■ 性能卓越	Excelente para a Aplicação	Excelente para Aplicación	Excellent for Application
● 性能良好	Bom para a Aplicação	Bueno para Aplicación	Good for Application
实例 10 = 外缘处的切削速度，米/分，+/- 10%	Exemplo 10 = Velocidade periférica em metros/minuto +/- 10%	Ejemplo 10 = Velocidad Periférica en metros/minuto +/- 10%	Example 10 = Peripheral speed in metres/minute +/- 10%

产品型号	Código	Código de producto	Product Codes
尺寸范围	Gama de medidas	Rango de Diámetros	Size Range

AMG	中文	Português	Español	English
1.1	铁磁性低碳钢	Aço macio magnético	Acero blando	Magnetic soft steel
1.2	结构钢, 表面渗碳钢	Aço estrutural, Aço cementado	Acero de construcción/cementación	Structural steel, case carburizing steel
1.3	普通碳钢	Aço-carbono	Acero al carbono	Plain Carbon steel
1.4	合金钢	Aço de liga	Acero aleado	Alloy steel
1.5	合金钢, 淬火回火钢	Aço de liga, Aço temperado	Acero aleado/temple y revenido	Alloy steel, Hardened and tempered steel
1.6	合金钢, 淬火回火钢	Aço de liga, Aço temperado	Acero aleado/temple y revenido	Alloy steel, Hardened and tempered steel
1.7	热处理合金钢	Aço de liga temperado	Acero aleado cementado	Alloy steel, Heat treated
1.8	淬火合金钢, 耐磨钢	Aço de liga temperado	Acero aleado cementado	Alloy steel, Hardened & Wear resistant steel
2.1	易切削不锈钢	Aço inoxidável de maquinagem fácil	Acero inoxidable fácil mecanizado	Free machining, Stainless Steel
2.2	奥氏体不锈钢	Austenítico	Austenítico	Austenitic
2.3	铁素体 + 奥氏体, 马氏体不锈钢	Ferrítico + Austenítico + Martensítico	Ferritico, Ferr. + Aust., Marten	Ferritic + Austenitic, Ferritic, Martensitic
2.4	沉淀硬化不锈钢	Aço inoxidável de fácil usinagem	Acero Inoxidable Templado	Precipitation Hardened
3.1	灰铸铁	Grafite laminar	Con grafito laminar	Lamellar graphite
3.2	灰铸铁	Grafite laminar	Con grafito laminar	Lamellar graphite
3.3	球墨铸铁, 可锻铸铁	Grafite nodular/ Ferro fundido maleável	Con graf. laminar, fundic. maleable	Nodular graphite, Malleable Cast Iron
3.4	球墨铸铁, 可锻铸铁	Grafite nodular/ Ferro fundido maleável	Con graf. laminar, fundic. maleable	Nodular graphite, Malleable Cast Iron
4.1	纯钛	Titânio, sem liga	Titanio no aleado	Titanium, unalloyed
4.2	钛合金	Titânio, com liga	Titanio aleado	Titanium, alloyed
4.3	钛合金	Titânio, com liga	Titanio aleado	Titanium, alloyed
5.1	纯镍	Níquel, sem liga	Níquel no aleado	Nickel, unalloyed
5.2	镍合金	Níquel, com liga	Níquel aleado	Nickel, alloyed
5.3	镍合金	Níquel, com liga	Níquel aleado	Nickel, alloyed
6.1	紫铜	Cobre	Cobre	Copper
6.2	β黄铜, 青铜	Latão beta, bronze	β-Latón, bronce	β-Brass, Bronze
6.3	α黄铜	Latão alfa	α-Latón	α-Brass
6.4	高强度青铜	Bronze de alta resistência	Metal AMPCO	High Strength Bronze
7.1	纯铝, 纯镁	Al, Mg, sem liga	Al, Mg, no aleado	Al, Mg, unalloyed
7.2	铝合金, 硅含量 < 0.5%	Al com liga, Si<0.5%	Al aleado con Si < 0.5%	Al alloyed, Si < 0.5%
7.3	铝合金, 硅含量 > 0.5% < 10%	Al com liga, Si>0.5%<10%	Al aleado con Si > 0.5% < 10%	Al alloyed, Si > 0.5% < 10%
7.4	铝合金, 硅含量 > 10% 晶须增强铝合金, 镁合金	Al com liga, Si>10% reforçadas com monocristais filiformes, ligas de Al/Mg	Al aleado, Si>10% Reforzado por filamentos, Al-aleados, Mg-aleados	Al alloyed, Si > 10% Whisker reinforced Al-alloys Mg-alloys
8.1	调整字体大小, 适应排版需要	Termoplásticos	Termoplásticos	Thermoplastics
8.2	热固性塑料	Plásticos termoduros	Plásticos endurecidos por calor	Thermosetting plastics
8.3	增强塑料	Materiais plásticos reforçados	Materiales plásticos reforzados	Reinforced plastic materials
9.1	金属陶瓷	Cerametal (metalocerâmica)	Cerametales (metales-cerámicas)	Cermets (metals-ceramics)
10.1	标准石墨	Grafite standard	Grafito standard	Graphite

DORMER

	M	M	M	MF	UNC	UNF	BSW	BSF	G	NPT	PG
	ISO 2568	ISO 2568	ISO 2568	ISO 2568	ISO 2568	ISO 2568	ISO 2568	ISO 2568	ISO 2568	ISO 2568	ISO 2568
	6g	6g	6g	6g	2A	2A	Medium	Medium	Class A	Normal	Normal
	1.75XP	1.75XP	2.25XP	1.75XP	1.75XP	1.75XP	1.75XP	1.75XP	1.75XP	1.75XP	1.75XP
	HSS	HSS	HSS-E	HSS	HSS	HSS	HSS	HSS	HSS	HSS	HSS

	F100	F201	F108	F110	F120	F130	F140	F150	F170	F180	F190	
	M2 - M42	M3 - M20	M2 - M20	M4 - M40	No.8 - 1“	No.10 - 1“	1/8 - 1“	3/16 - 1/2	1/8 - 2“	1/8 - 1“	No.7 - No.36	
AMG	349	349	349	350	351	352	353	354	355	356	357	ISO
1.1	■8	■8	●8	■8	■8	■8	■8	■8	■8	■8	■8	P 1
1.2	■7	■7	●7	■7	■7	■7	■7	■7	■7	■7	■7	P 1
1.3	■6	■6	■6	■6	■6	■6	■6	■6	■6	■6	■6	P 2
1.4	●5	●5	■5	●5	●5	●5	●5	●5	●5	●5	●5	P 3
1.5			●4									P 4
1.6												H 1
1.7												H 3
1.8												H 4
2.1	●4	●4	■4	●4	●4	●4	●4	●4	●4	●4	●4	M 1
2.2	●2	●2	■2	●2	●2	●2	●2	●2	●2	●2	●2	M 3
2.3			●1									M 2
2.4												S 2
3.1	■8	■8	■8	■8	■8	■8	■8	■8	■8	■8	■8	K 1
3.2	■7	■7	■7	■7	■7	■7	■7	■7	■7	■7	■7	K 2
3.3	■6	■6	■6	■6	■6	■6	■6	■6	■6	■6	■6	K 3
3.4	●5	●5	●5	●5	●5	●5	●5	●5	●5	●5	●5	K 4
4.1			●2									S 1
4.2												S 2
4.3	●2	●2	●2	●2	●2	●2	●2	●2	●2	●2	●2	S 3
5.1	●9	●9	●9	●9	●9	●9	●9	●9	●9	●9	●9	S 1
5.2	●2	●2	●2	●2	●2	●2	●2	●2	●2	●2	●2	S 2
5.3	●2	●2	●2	●2	●2	●2	●2	●2	●2	●2	●2	S 3
6.1	●9	●9	●9	●9	●9	●9	●9	●9	●9	●9	●9	N 3
6.2	●8	●8	●8	●8	●8	●8	●8	●8	●8	●8	●8	N 4
6.3	●7	●7	●7	●7	●7	●7	●7	●7	●7	●7	●7	N 3
6.4			●2									N 4
7.1	■10	■10	■10	■10	■10	■10	■10	■10	■10	■10	■10	N 1
7.2	■15	■15	■15	■15	■15	■15	■15	■15	■15	■15	■15	N 1
7.3	■15	■15	■15	■15	■15	■15	■15	■15	■15	■15	■15	N 1
7.4	●10	●10	●10	●10	●10	●10	●10	●10	●10	●10	●10	N 2
8.1	●15	●15	●15	●15	●15	●15	●15	●15	●15	●15	●15	O
8.2	●10	●10	●10	●10	●10	●10	●10	●10	●10	●10	●10	O
8.3	●5	●5	●5	●5	●5	●5	●5	●5	●5	●5	●5	O
9.1												H
10.1												O

DORMER

M	MF	UNC	UNF	G	M	M	MF	G	
BS 1127: 1950	BS 1127: 1950	BS 1127: 1950	BS 1127: 1950	BS 1127: 1950	DIN 382	BS 1127: 1950	BS 1127: 1950	DIN 382	
					6g	6g	6g	Class A	
1.75XP	1.75XP	1.75XP	1.75XP	1.75XP	1.75XP	1.75XP	1.75XP	1.75XP	
HSS	HSS	HSS	HSS	HSS	HSS	HSS	HSS	HSS	

	F300	F310	F320	F330	F370	F202	F302	F312	F272	
	M2 - M36	M3 - M30	No.4 - 1.1/4	No.4 - 1.1/2	1/8 - 1.1/2	M3 - M36	M3 - M36	M8 - M24	1/8 - 1.1/2	
AMG	358	359	360	361	362	363	364	365	366	ISO
1.1	■8	■8	■8	■8	■8	■8	■8	■8	■8	P 1
1.2	■7	■7	■7	■7	■7	■7	■7	■7	■7	P 1
1.3	■6	■6	■6	■6	■6	■6	■6	■6	■6	P 2
1.4	•5	•5	•5	•5	•5	•5	•5	•5	•5	P 3
1.5										P 4
1.6										H 1
1.7										H 3
1.8										H 4
2.1	•4	•4	•4	•4	•4	•4	•4	•4	•4	M 1
2.2	•2	•2	•2	•2	•2	•2	•2	•2	•2	M 3
2.3										M 2
2.4										S 2
3.1	■8	■8	■8	■8	■8	■8	■8	■8	■8	K 1
3.2	■7	■7	■7	■7	■7	■7	■7	■7	■7	K 2
3.3	■6	■6	■6	■6	■6	■6	■6	■6	■6	K 3
3.4	•5	•5	•5	•5	•5	•5	•5	•5	•5	K 4
4.1										S 1
4.2										S 2
4.3	•2	•2	•2	•2	•2	•2	•2	•2	•2	S 3
5.1	•9	•9	•9	•9	•9	•9	•9	•9	•9	S 1
5.2	•2	•2	•2	•2	•2	•2	•2	•2	•2	S 2
5.3	•2	•2	•2	•2	•2	•2	•2	•2	•2	S 3
6.1	•9	•9	•9	•9	•9	•9	•9	•9	•9	N 3
6.2	•8	•8	•8	•8	•8	•8	•8	•8	•8	N 4
6.3	•7	•7	•7	•7	•7	•7	•7	•7	•7	N 3
6.4										N 4
7.1	■10	■10	■10	■10	■10	■10	■10	■10	■10	N 1
7.2	■15	■15	■15	■15	■15	■15	■15	■15	■15	N 1
7.3	■15	■15	■15	■15	■15	■15	■15	■15	■15	N 1
7.4	•10	•10	•10	•10	•10	•10	•10	•10	•10	N 2
8.1	•15	•15	•15	•15	•15	•15	•15	•15	•15	O
8.2	•10	•10	•10	•10	•10	•10	•10	•10	•10	O
8.3	•5	•5	•5	•5	•5	•5	•5	•5	•5	O
9.1										H
10.1										O

F100 F201 F108

- M 带刃倾角板牙
- M Cossinete
- M Terrajas de roscar
- M Gun Nosed Die

F100; F201	▪	1.1	1.2	1.3	3.1	3.2	3.3	7.1	7.2	7.3									
	•	1.4	2.1	2.2	3.4	4.3	5.1	5.2	5.3	6.1	6.2	6.3	7.4	8.1	8.2	8.3			
F108	▪	1.3	1.4	2.1	2.2	3.1	3.2	3.3	7.1	7.2	7.3								
	•	1.1	1.2	1.5	2.3	3.4	4.1	4.3	5.1	5.2	5.3	6.1	6.2	6.3	6.4	7.4	8.1	8.2	8.3

F100	M	ISO 2568	6g	1.75XP	HSS			L120 339
F201	M	ISO 2568	6g	1.75XP	HSS			
F108	M	ISO 2568	6g	2.25XP	HSS-E			

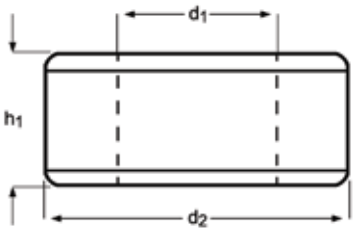

F100	F201	F108
		
M2 - M42	M3 - M20	M2 - M20

M	P mm	d_2 Ø mm	h_1 mm	F100	F201	F108
2	0.40	16	5	F100M2 [1]		F108M2 [1]
2.5	0.45	16	5	F100M2.5 [1]		F108M2.5 [1]
2.6	0.45	16	5	F100M2.6 [1]		
3	0.50	20	5	F100M3	F201M3	F108M3
3.5	0.60	20	5	F100M3.5		
4	0.70	20	5	F100M4	F201M4	F108M4
4.5	0.75	20	7	F100M4.5		
5	0.80	20	7	F100M5	F201M5	F108M5
6	1.00	20	7	F100M6	F201M6	F108M6
7	1.00	25	9	F100M7		
8	1.25	25	9	F100M8	F201M8	F108M8
9	1.25	25	9	F100M9		
10	1.50	30	11	F100M10	F201M10	F108M10
11	1.50	30	11	F100M11		
12	1.75	38	14	F100M12	F201M12	F108M12
14	2.00	38	14	F100M14	F201M14	F108M14
16	2.00	45	18	F100M16	F201M16	F108M16
18	2.50	45	18	F100M18	F201M18	F108M18
20	2.50	45	18	F100M20	F201M20	F108M20
22	2.50	55	22	F100M22		
24	3.00	55	22	F100M24		
27	3.00	65	25	F100M27		
30	3.50	65	25	F100M30		
33	3.50	65	25	F100M33		
36	4.00	65	25	F100M36		
39	4.00	75	30	F100M39		
42	4.50	75	30	F100M42		

[1] 不带刃倾角 / Sem ponta helicoidal / Sin entrada en hélice / Without gun-nose

DORMER

F110

- MF 带刃倾角板牙
- MF Cossinete
- MF Terrajas de roscar
- MF Gun Nosed Die

F110																
■	1.1	1.2	1.3	3.1	3.2	3.3	7.1	7.2	7.3							
•	1.4	2.1	2.2	3.4	4.3	5.1	5.2	5.3	6.1	6.2	6.3	7.4	8.1	8.2	8.3	

F110 MF ISO 2568 6g 1.75XP HSS

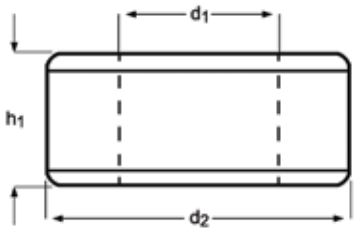

F110

M4 - M40

MF	P mm	d_2 Ø mm	h_1 mm	F110
4	0.50	20	5	F110M4X.5
5	0.50	20	5	F110M5X.5
6	0.75	20	7	F110M6X.75
7	0.75	25	9	F110M7X.75
8	0.75	25	9	F110M8X.75
8	1.00	25	9	F110M8X1.0
9	1.00	25	9	F110M9X1.0
10	0.75	30	11	F110M10X.75
10	1.00	30	11	F110M10X1.0
10	1.25	30	11	F110M10X1.25
11	1.00	30	11	F110M11X1.0
12	1.00	38	10	F110M12X1.0
12	1.25	38	10	F110M12X1.25
12	1.50	38	10	F110M12X1.5
13	1.00	38	10	F110M13X1.0
14	1.00	38	10	F110M14X1.0
14	1.25	38	10	F110M14X1.25
14	1.50	38	10	F110M14X1.5
15	1.00	38	10	F110M15X1.0
15	1.50	38	10	F110M15X1.5
16	1.00	45	14	F110M16X1.0
16	1.50	45	14	F110M16X1.5
18	1.00	45	14	F110M18X1.0
18	1.50	45	14	F110M18X1.5
20	1.00	45	14	F110M20X1.0
20	1.50	45	14	F110M20X1.5
22	1.00	55	16	F110M22X1.0
22	1.50	55	16	F110M22X1.5
24	1.00	55	16	F110M24X1.0
24	1.50	55	16	F110M24X1.5
24	2.00	55	16	F110M24X2.0
25	1.50	55	16	F110M25X1.5
26	1.50	55	16	F110M26X1.5
27	1.50	65	18	F110M27X1.5
27	2.00	65	18	F110M27X2.0
28	1.50	65	18	F110M28X1.5
30	1.50	65	18	F110M30X1.5
32	1.50	65	18	F110M32X1.5
35	1.50	65	18	F110M35X1.5
36	1.50	65	18	F110M36X1.5
40	1.50	75	20	F110M40X1.5

F120

- UNC 带刃倾角板牙
- UNC Cossinete
- UNC Terrajas de roscar
- UNC Gun Nosed Die

F120																
	▪	1.1	1.2	1.3	3.1	3.2	3.3	7.1	7.2	7.3						
	•	1.4	2.1	2.2	3.4	4.3	5.1	5.2	5.3	6.1	6.2	6.3	7.4	8.1	8.2	8.3

F120 UNC ISO 2568 2A 1.75XP HSS

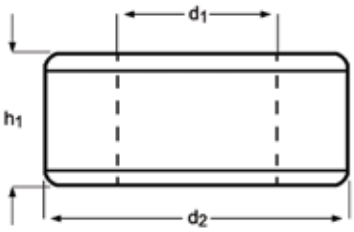

F120

No.8 - 1“

UNC	TPI	d_1 nom mm	d_2 Ø mm	h_1 mm	F120
8	32	4.17	20	7	F1208-32
10	24	4.83	20	7	F12010-24
1/4	20	6.35	20	7	F1201/4
5/16	18	7.94	25	9	F1205/16
3/8	16	9.53	30	11	F1203/8
7/16	14	11.11	30	11	F1207/16
1/2	13	12.70	38	14	F1201/2
9/16	12	14.29	38	14	F1209/16
5/8	11	15.88	45	18	F1205/8
3/4	10	19.05	45	18	F1203/4
7/8	9	22.23	55	22	F1207/8
1“	8	25.40	55	22	F1201

DORMER

F130

- UNF 带刃倾角板牙
- UNF Cossinete
- UNF Terrajas de roscar
- UNF Gun Nosed Die

F130																
■	1.1	1.2	1.3	3.1	3.2	3.3	7.1	7.2	7.3							
•	1.4	2.1	2.2	3.4	4.3	5.1	5.2	5.3	6.1	6.2	6.3	7.4	8.1	8.2	8.3	

F130 UNF ISO 2568 2A 1.75XP HSS

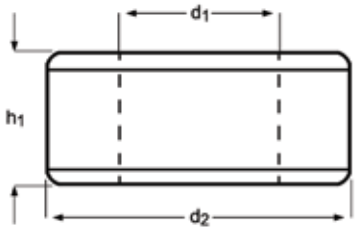

F130

No.10 - 1"

UNF	TPI	d_1 nom mm	d_2 Ø mm	h_1 mm	F130
10	32	4.83	20	7	F13010-32
1/4	28	6.35	20	7	F1301/4
5/16	24	7.94	25	9	F1305/16
3/8	24	9.53	30	11	F1303/8
7/16	20	11.11	30	11	F1307/16
1/2	20	12.70	38	10	F1301/2
9/16	18	14.29	38	10	F1309/16
5/8	18	15.88	45	14	F1305/8
3/4	16	19.05	45	14	F1303/4
7/8	14	22.23	55	16	F1307/8
1“	12	25.40	55	16	F1301

F140

- BSW 带刃倾角板牙
- BSW Cossinete
- BSW Terrajas de roscar
- BSW Gun Nosed Die

F140																
	▪	1.1	1.2	1.3	3.1	3.2	3.3	7.1	7.2	7.3						
	•	1.4	2.1	2.2	3.4	4.3	5.1	5.2	5.3	6.1	6.2	6.3	7.4	8.1	8.2	8.3

F140 BSW ISO 2568 Medium 1.75XP HSS

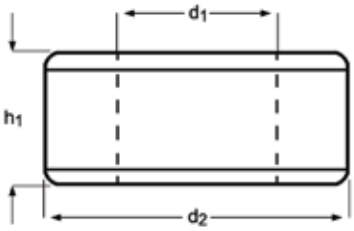

F140

1/8 - 1“

BSW	TPI	d_1 nom mm	d_2 Ø mm	h_1 mm	F140
1/8	40	3.17	20	5	F1401/8
3/16	24	4.76	20	7	F1403/16
1/4	20	6.35	20	7	F1401/4
5/16	18	7.94	25	9	F1405/16
3/8	16	9.53	30	11	F1403/8
7/16	14	11.11	30	11	F1407/16
1/2	12	12.70	38	14	F1401/2
5/8	11	15.88	45	18	F1405/8
3/4	10	19.05	45	18	F1403/4
7/8	9	22.23	55	22	F1407/8
1“	8	25.40	55	22	F1401

F150

- BSF 带刃倾角板牙
- BSF Cossinete
- BSF Terrajas de roscar
- BSF Gun Nosed Die

F150																
▪	1.1	1.2	1.3	3.1	3.2	3.3	7.1	7.2	7.3							
•	1.4	2.1	2.2	3.4	4.3	5.1	5.2	5.3	6.1	6.2	6.3	7.4	8.1	8.2	8.3	

F150 BSF ISO 2568 Medium 1.75XP HSS

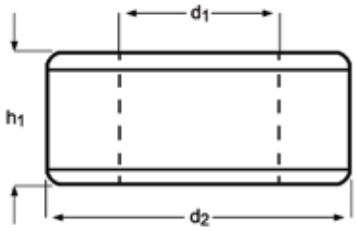

F150

3/16 - 1/2

BSF	TPI	d_1 nom mm	d_2 Ø mm	h_1 mm	F150
3/16	32	4.76	20	7	F1503/16
1/4	26	6.35	20	7	F1501/4
5/16	22	7.94	25	9	F1505/16
3/8	20	9.53	30	11	F1503/8
7/16	18	11.11	30	11	F1507/16
1/2	16	12.70	38	10	F1501/2

F170

- G(BSP) 带刃倾角板牙
- G(BSP) Cossinete
- G(BSP) Terrajas de roscar
- G(BSP) Gun Nosed Die

F170																
	▪	1.1	1.2	1.3	3.1	3.2	3.3	7.1	7.2	7.3						
	•	1.4	2.1	2.2	3.4	4.3	5.1	5.2	5.3	6.1	6.2	6.3	7.4	8.1	8.2	8.3

F170 G | ISO 2568 | Class A | 1.75XP | HSS

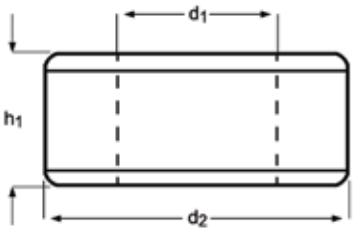

F170

1/8 - 2“

G(BSP)	TPI	d_1 nom mm	d_2 Ø mm	h_1 mm	F170
1/8	28	9.73	30	11	F1701/8
1/4	19	13.16	38	10	F1701/4
3/8	19	16.66	45	14	F1703/8
1/2	14	20.96	45	14	F1701/2
5/8	14	22.91	55	16	F1705/8
3/4	14	26.44	55	16	F1703/4
7/8	14	30.20	65	18	F1707/8
1“	11	33.25	65	18	F1701
1.1/8	11	37.89	75	20	F1701.1/8
1.1/4	11	41.91	75	20	F1701.1/4
1.1/2	11	47.80	90	22	F1701.1/2
2“	11	59..61	105	22	F1702

F180

- NPT 带刃倾角板牙
- NPT Cossinete
- NPT Terrajas de roscar
- NPT Gun Nosed Die

F180																
	■	1.1	1.2	1.3	3.1	3.2	3.3	7.1	7.2	7.3						
	•	1.4	2.1	2.2	3.4	4.3	5.1	5.2	5.3	6.1	6.2	6.3	7.4	8.1	8.2	8.3

F180 NPT ISO 2568 Normal 1.75XP HSS

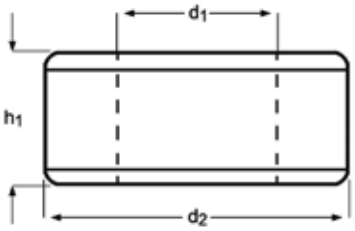

F180

1/8 - 1“

NPT	TPI	d_1 nom mm	d_2 Ø mm	h_1 mm	F180
1/8	27	9.49	30	11	F1801/8
1/4	18	12.49	38	14	F1801/4
3/8	18	15.93	45	14	F1803/8
1/2	14	19.77	45	18	F1801/2
3/4	14	25.12	55	22	F1803/4
1“	11.5	31.46	65	25	F1801

F190

- PG 带刃倾角板牙
- PG Cossinete
- PG Terrajas de roscar
- PG Gun Nosed Die

F190																
	▪	1.1	1.2	1.3	3.1	3.2	3.3	7.1	7.2	7.3						
	•	1.4	2.1	2.2	3.4	4.3	5.1	5.2	5.3	6.1	6.2	6.3	7.4	8.1	8.2	8.3

F190 PG ISO 2568 Normal 1.75XP HSS

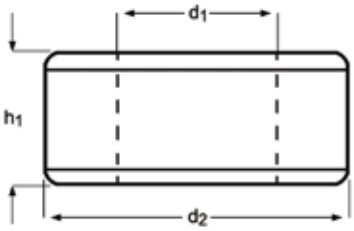

F190

No.7 - No.36

PG	TPI	d_1 nom mm	d_2 Ø mm	h_1 mm	F190
7	20	12.5	38	10	F190PG7
9	18	15.2	38	10	F190PG9
11	18	18.6	45	14	F190PG11
13.5	18	20.4	45	14	F190PG13.5
16	18	22.5	55	16	F190PG16
21	16	28.3	65	18	F190PG21
29	16	37.0	65	18	F190PG29
36	16	47.0	90	22	F190PG36

DORMER

F300

- M 可调节板牙
- M Cossinetes ajustáveis
- M Terraja tipo Ajustable
- M Adjustable Dies

F300																
	■	1.1	1.2	1.3	3.1	3.2	3.3	7.1	7.2	7.3						
	•	1.4	2.1	2.2	3.4	4.3	5.1	5.2	5.3	6.1	6.2	6.3	7.4	8.1	8.2	8.3

F300 M BS 1127: 1950 1.75XP HSS L120 339

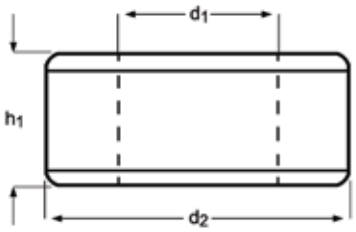

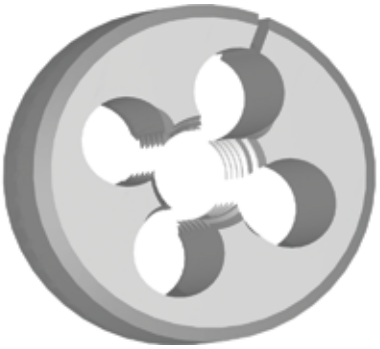

F300

M2 - M36

M	P mm	d_2 Ø Inch	h_1 Inch	F300
2	0.40	13/16	1/4	F300M2X13/16
2.5	0.45	13/16	1/4	F300M2.5X13/16
3	0.50	13/16	1/4	F300M3X13/16
3.5	0.60	13/16	1/4	F300M3.5X13/16
4	0.70	13/16	1/4	F300M4X13/16
5	0.80	13/16	1/4	F300M5X13/16
5	0.80	1“	3/8	F300M5X1
6	1.00	13/16	1/4	F300M6X13/16
6	1.00	1“	3/8	F300M6X1
6	1.00	1.5/16	7/16	F300M6X1.5/16
7	1.00	13/16	1/4	F300M7X13/16
7	1.00	1“	3/8	F300M7X1
8	1.25	1“	3/8	F300M8X1
8	1.25	1.5/16	7/16	F300M8X1.5/16
9	1.25	1“	3/8	F300M9X1
9	1.25	1.5/16	7/16	F300M9X1.5/16
10	1.50	1“	3/8	F300M10X1
10	1.50	1.5/16	7/16	F300M10X1.5/16
10	1.50	1.1/2	1/2	F300M10X1.1/2
11	1.50	1.5/16	7/16	F300M11X1.5/16
12	1.75	1.5/16	7/16	F300M12X1.5/16
12	1.75	1.1/2	1/2	F300M12X1.1/2
14	2.00	1.5/16	7/16	F300M14X1.5/16
14	2.00	1.1/2	1/2	F300M14X1.1/2
16	2.00	1.1/2	1/2	F300M16X1.1/2
16	2.00	2“	5/8	F300M16X2
18	2.50	1.1/2	1/2	F300M18X1.1/2
18	2.50	2“	5/8	F300M18X2
20	2.50	1.1/2	1/2	F300M20X1.1/2
20	2.50	2“	5/8	F300M20X2
22	2.50	2“	5/8	F300M22X2
24	3.00	2“	5/8	F300M24X2
27	3.00	3“	7/8	F300M27X3
30	3.50	3“	7/8	F300M30X3
36	4.00	3“	7/8	F300M36X3

F310

- MF 可调节板牙
- MF Cossinetes ajustáveis
- MF Terraja tipo Ajustable
- MF Adjustable Dies

F310																
	▪	1.1	1.2	1.3	3.1	3.2	3.3	7.1	7.2	7.3						
	•	1.4	2.1	2.2	3.4	4.3	5.1	5.2	5.3	6.1	6.2	6.3	7.4	8.1	8.2	8.3

F310 MF BS 1127: 1950 1.75XP HSS

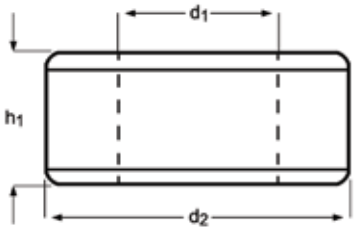

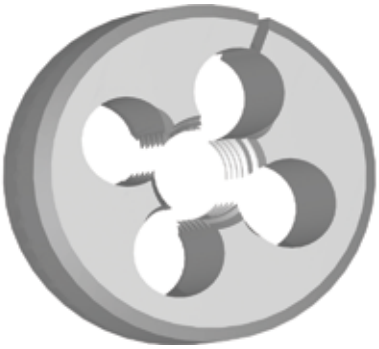

F310

M3 - M30

MF	P mm	d_2 Ø Inch	h_1 Inch	F310
3	0.35	13/16	1/4	F310M3X.35X13/16
4	0.50	13/16	1/4	F310M4X.5X13/16
4	0.75	13/16	1/4	F310M4X.75X13/16
5	0.50	13/16	1/4	F310M5X.5X13/16
5	0.90	13/16	1/4	F310M5X.9X13/16
6	0.75	13/16	1/4	F310M6X.75X13/16
8	0.75	1“	3/8	F310M8X.75X1
8	1.00	1“	3/8	F310M8X1.0X1
9	1.00	1“	3/8	F310M9X1.0X1
10	0.75	1“	3/8	F310M10X.75X1
10	1.00	1“	3/8	F310M10X1.0X1
10	1.25	1“	3/8	F310M10X1.25X1
10	1.25	1.5/16	7/16	F310M10X1.25X1.5/16
12	1.00	1.5/16	7/16	F310M12X1.0X1.5/16
12	1.25	1.5/16	7/16	F310M12X1.25X1.5/16
12	1.50	1.5/16	7/16	F310M12X1.5X1.5/16
14	1.25	1.5/16	7/16	F310M14X1.25X1.5/16
14	1.50	1.5/16	7/16	F310M14X1.5X1.5/16
16	1.00	1.1/2	1/2	F310M16X1.0X1.1/2
16	1.50	1.1/2	1/2	F310M16X1.5X1.1/2
18	1.50	1.1/2	1/2	F310M18X1.5X1.1/2
20	1.00	1.1/2	1/2	F310M20X1.0X1.1/2
20	1.50	2“	5/8	F310M20X1.5X2
20	2.00	1.1/2	1/2	F310M20X2.0X1.1/2
22	1.50	2“	5/8	F310M22X1.5X2
24	1.50	2“	5/8	F310M24X1.5X2
24	2.00	2“	5/8	F310M24X2.0X2
25	1.50	2“	5/8	F310M25X1.5X2
27	2.00	2.1/4	11/16	F310M27X2.0X2.1/4
30	2.00	2.1/4	11/16	F310M30X2.0X2.1/4

DORMER

F320

- UNC 可调节板牙
- UNC Cossinetes ajustáveis
- UNC Terraja tipo Ajustable
- UNC Adjustable Dies

F320																
■	1.1	1.2	1.3	3.1	3.2	3.3	7.1	7.2	7.3							
•	1.4	2.1	2.2	3.4	4.3	5.1	5.2	5.3	6.1	6.2	6.3	7.4	8.1	8.2	8.3	

F320 UNC BS 1127: 1950 1.75XP HSS

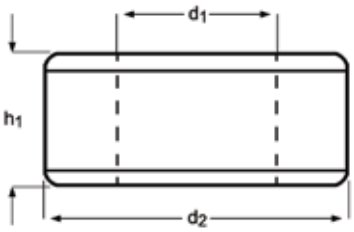

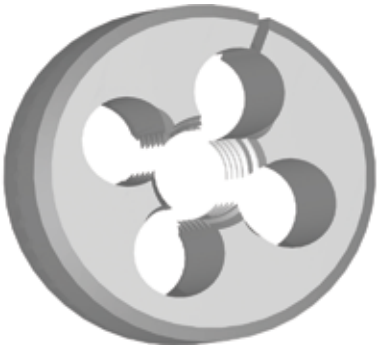

F320

No.4 - 1.1/4

UNC	TPI	d_1 nom mm	d_2 Ø Inch	h_1 Inch	F320
4	40	2.85	13/16	1/4	F3204-40X13/16
5	40	3.18	13/16	1/4	F3205-40X13/16
6	32	3.51	13/16	1/4	F3206-32X13/16
8	32	4.17	13/16	1/4	F3208-32X13/16
8	32	4.17	1“	3/8	F3208-32X1
10	24	4.83	13/16	1/4	F32010-24X13/16
10	24	4.83	1“	3/8	F32010-24X1
12	24	5.49	13/16	1/4	F32012-24X13/16
1/4	20	6.35	13/16	1/4	F3201/4X13/16
1/4	20	6.35	1“	3/8	F3201/4X1
1/4	20	6.35	1.5/16	7/16	F3201/4X1.5/16
1/4	20	6.35	1.1/2	1/2	F3201/4X1.1/2
5/16	18	7.94	1“	3/8	F3205/16X1
5/16	18	7.94	1.1/2	1/2	F3205/16X1.1/2
3/8	16	9.53	1“	3/8	F3203/8X1
3/8	16	9.53	1.5/16	7/16	F3203/8X1.5/16
3/8	16	9.53	1.1/2	1/2	F3203/8X1.1/2
7/16	14	11.11	1.5/16	7/16	F3207/16X1.5/16
7/16	14	11.11	1.1/2	1/2	F3207/16X1.1/2
1/2	13	12.70	1.5/16	7/16	F3201/2X1.5/16
1/2	13	12.70	1.1/2	1/2	F3201/2X1.1/2
1/2	13	12.70	2“	5/8	F3201/2X2
9/16	12	14.29	1.1/2	1/2	F3209/16X1.1/2
5/8	11	15.88	1.1/2	1/2	F3205/8X1.1/2
5/8	11	15.88	2“	5/8	F3205/8X2
3/4	10	19.05	1.1/2	1/2	F3203/4X1.1/2
3/4	10	19.05	2“	5/8	F3203/4X2
7/8	9	22.23	2“	5/8	F3207/8X2
1“	8	25.40	2“	5/8	F3201X2
1.1/8	7	28.58	3“	7/8	F3201.1/8X3
1.1/4	7	31.75	3“	7/8	F3201.1/4X3

F330

- UNF 可调节板牙
- UNF Cossinetes ajustáveis
- UNF Terraja tipo Ajustable
- UNF Adjustable Dies

F330																
	▪	1.1	1.2	1.3	3.1	3.2	3.3	7.1	7.2	7.3						
	•	1.4	2.1	2.2	3.4	4.3	5.1	5.2	5.3	6.1	6.2	6.3	7.4	8.1	8.2	8.3

F330 UNF BS 1127: 1950 1.75XP HSS

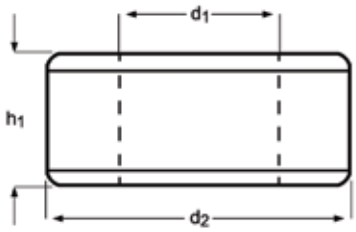

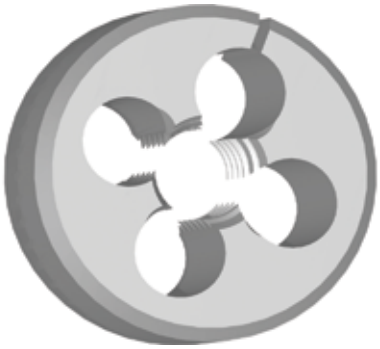

F330

No.4 - 1.1/2

UNF	TPI	d_1 nom mm	d_2 Ø Inch	h_1 Inch	F330
4	48	2.85	13/16	1/4	F3304-48X13/16
5	44	3.18	13/16	1/4	F3305-44X13/16
6	40	3.51	13/16	1/4	F3306-40X13/16
8	36	4.17	13/16	1/4	F3308-36X13/16
10	32	4.83	13/16	1/4	F33010-32X13/16
10	32	4.83	1“	3/8	F33010-32X1
12	28	5.49	13/16	1/4	F33012-28X13/16
1/4	28	6.35	13/16	1/4	F3301/4X13/16
1/4	28	6.35	1“	3/8	F3301/4X1
1/4	28	6.35	1.1/2	1/2	F3301/4X1.1/2
5/16	24	7.94	1“	3/8	F3305/16X1
5/16	24	7.94	1.5/16	7/16	F3305/16X1.5/16
5/16	24	7.94	1.1/2	1/2	F3305/16X1.1/2
3/8	24	9.53	1“	3/8	F3303/8X1
3/8	24	9.53	1.5/16	7/16	F3303/8X1.5/16
3/8	24	9.53	1.1/2	1/2	F3303/8X1.1/2
7/16	20	11.11	1“	3/8	F3307/16X1
7/16	20	11.11	1.5/16	7/16	F3307/16X1.5/16
7/16	20	11.11	1.1/2	1/2	F3307/16X1.1/2
1/2	20	12.70	1.5/16	7/16	F3301/2X1.5/16
1/2	20	12.70	1.1/2	1/2	F3301/2X1.1/2
9/16	18	14.29	1.5/16	7/16	F3309/16X1.5/16
9/16	18	14.29	1.1/2	1/2	F3309/16X1.1/2
5/8	18	15.88	1.1/2	1/2	F3305/8X1.1/2
5/8	18	15.88	2“	5/8	F3305/8X2
3/4	16	19.05	1.1/2	1/2	F3303/4X1.1/2
3/4	16	19.05	2“	5/8	F3303/4X2
7/8	14	22.23	2“	5/8	F3307/8X2
1“	12	25.40	2“	5/8	F3301X2
1.1/8	12	28.58	3“	7/8	F3301.1/8X3
1.1/4	12	31.75	3“	7/8	F3301.1/4X3
1.1/2	12	38.10	3“	7/8	F3301.1/2X3

F370

- G(BSP) 可调节板牙
- G(BSP) Cossinetes ajustáveis
- G(BSP) Terraja tipo Ajustable
- G(BSP) Adjustable Dies

F370																
	■	1.1	1.2	1.3	3.1	3.2	3.3	7.1	7.2	7.3						
	•	1.4	2.1	2.2	3.4	4.3	5.1	5.2	5.3	6.1	6.2	6.3	7.4	8.1	8.2	8.3

F370 G | BS 1127: 1950 | 1.75XP | HSS

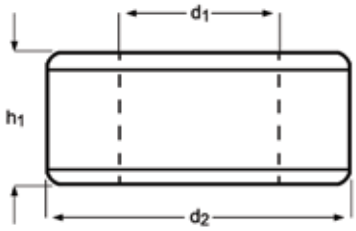

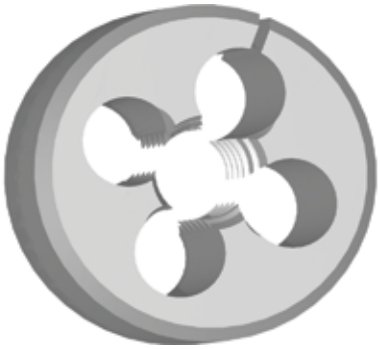

F370

1/8 - 1.1/2

G(BSP)	TPI	d_1 nom mm	d_2 Ø Inch	h_1 Inch	F370
1/8	28	9.73	1“	3/8	F3701/8X1
1/4	19	13.16	1.5/16	7/16	F3701/4X1.5/16
3/8	19	16.66	1.1/2	1/2	F3703/8X1.1/2
1/2	14	20.96	2“	5/8	F3701/2X2
5/8	14	22.91	2“	5/8	F3705/8X2
3/4	14	26.44	2“	5/8	F3703/4X2
7/8	14	30.20	2.1/4	11/16	F3707/8X2.1/4
1“	11	33.25	2.1/4	11/16	F3701X2.1/4
1.1/4	11	41.91	3“	7/8	F3701.1/4X3
1.1/2	11	47.80	4“	1“	F3701.1/2X4

F202

- M 六角板牙
- M Cossinetes Sextavados
- M Terrajas, exterior hexagonal
- M Dienuts

F202																
▪	1.1	1.2	1.3	3.1	3.2	3.3	7.1	7.2	7.3							
•	1.4	2.1	2.2	3.4	4.3	5.1	5.2	5.3	6.1	6.2	6.3	7.4	8.1	8.2	8.3	

F202 M | DIN 382 | 6g | 1.75XP | HSS

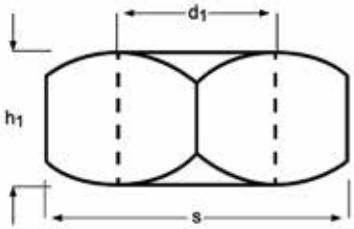

F202

M3 - M36

M	P mm	S mm	h_1 mm	F202
3	0.50	19	5	F202M3
4	0.70	19	5	F202M4
5	0.80	19	7	F202M5
6	1.00	19	7	F202M6
7	1.00	22	9	F202M7
8	1.25	22	9	F202M8
10	1.50	27	11	F202M10
12	1.75	36	14	F202M12
14	2.00	36	14	F202M14
16	2.00	41	18	F202M16
18	2.50	41	18	F202M18
20	2.50	41	18	F202M20
22	2.50	50	22	F202M22
24	3.00	50	22	F202M24
27	3.00	60	25	F202M27
30	3.50	60	25	F202M30
36	4.00	60	25	F202M36

DORMER

F302

- M 六角板牙
- M Cossinetes Sextavados
- M Terrajas, exterior hexagonal
- M Dienuts

F302																
	■	1.1	1.2	1.3	3.1	3.2	3.3	7.1	7.2	7.3						
	•	1.4	2.1	2.2	3.4	4.3	5.1	5.2	5.3	6.1	6.2	6.3	7.4	8.1	8.2	8.3

F302 M BS 1127: 1950 6g 1.75XP HSS

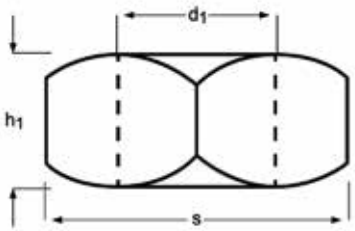

F302

M3 - M36

M	P mm	S decimal Inch	h_1 Inch	F302
3	0.50	0.7100	1/4	F302M3
4	0.70	0.7100	1/4	F302M4
5	0.80	0.7100	1/4	F302M5
6	1.00	0.7100	1/4	F302M6
7	1.00	0.8200	5/16	F302M7
8	1.25	0.8200	5/16	F302M8
10	1.50	0.9200	3/8	F302M10
11	1.50	1.0100	7/16	F302M11
12	1.75	1.1000	1/2	F302M12
14	2.00	1.3000	5/8	F302M14
16	2.00	1.3000	5/8	F302M16
18	2.50	1.4800	11/16	F302M18
20	2.50	1.4800	11/16	F302M20
22	2.50	1.6700	13/16	F302M22
24	3.00	2.0500	15/16	F302M24
27	3.00	2.2200	1.1/16	F302M27
30	3.50	2.2200	1.1/16	F302M30
33	3.50	2.5800	1.1/8	F302M33
36	4.00	2.7600	1.1/4	F302M36

F312

- MF 六角板牙
- MF Cossinetes Sextavados
- MF Terrajas, exterior hexagonal
- MF Dienuts

F312																
	■	1.1	1.2	1.3	3.1	3.2	3.3	7.1	7.2	7.3						
	•	1.4	2.1	2.2	3.4	4.3	5.1	5.2	5.3	6.1	6.2	6.3	7.4	8.1	8.2	8.3

F312 MF | BS 1127: 1950 | 6g | 1.75XP | HSS

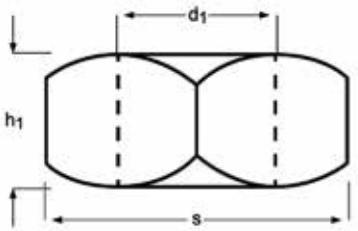

F312

M8 - M24

MF	P mm	S decimal Inch	h_1 Inch	F312
8	0.75	0.8200	5/16	F312M8X.75
8	1.00	0.8200	5/16	F312M8X1.0
10	1.00	0.9200	3/8	F312M10X1.0
10	1.25	0.9200	3/8	F312M10X1.25
12	1.00	1.0100	7/16	F312M12X1.0
12	1.25	1.0100	7/16	F312M12X1.25
12	1.50	1.0100	7/16	F312M12X1.5
14	1.50	1.3000	5/8	F312M14X1.5
16	1.50	1.3000	5/8	F312M16X1.5
18	1.50	1.4800	11/16	F312M18X1.5
20	1.50	1.4800	11/16	F312M20X1.5
22	1.50	1.6700	13/16	F312M22X1.5
24	1.50	2.0500	15/16	F312M24X1.5
24	2.00	2.0500	15/16	F312M24X2.0

F272

- G(BSP) 六角板牙
- G(BSP) Cossinetes Sextavados
- G(BSP) Terrajas, exterior hexagonal
- G(BSP) Dienuts

F272																
■	1.1	1.2	1.3	3.1	3.2	3.3	7.1	7.2	7.3							
•	1.4	2.1	2.2	3.4	4.3	5.1	5.2	5.3	6.1	6.2	6.3	7.4	8.1	8.2	8.3	

F272 G | DIN 382 | Class A | 1.75XP | HSS

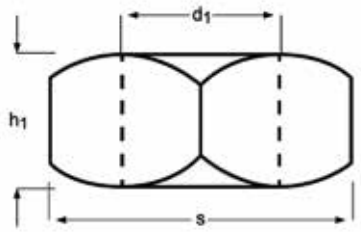

F272

1/8 - 1.1/2

G(BSP)	TPI	d_1 nom mm	S mm	h_1 mm	F272
1/8	28	9.73	27	11	F2721/8
1/4	19	13.16	36	10	F2721/4
3/8	19	16.66	41	14	F2723/8
1/2	14	20.96	41	14	F2721/2
3/4	14	26.44	60	18	F2723/4
1“	11	33.25	60	18	F2721
1.1/4	11	41.91	70	20	F2721.1/4
1.1/2	11	47.80	85	22	F2721.1/2

367 - 494

DORMER

材料	Material	Material	Material
应用	Aplicação	Aplicaciones	Application
类型	Tipo	Tipo	Type
刀齿 (z)	N° de Cortes	Dientes	teeth (z)
切削长度	Comprimento de corte	Longitud de corte	Cut length
螺旋角	Ângulo de hélice / Ângulo de saída	Ángulo de hélice / Ángulo de salida	Helix angle/ Rake angle
柄部	Haste	Mango	Shank
涂层	Tratamento	Tratamiento superficial	Coating
公差	Tolerância	Tolerancia	Tolerance
加工方向	Direção	Dirección	Direction
标准	Norma	Estándar	Standard
■ 性能卓越	Excelente para a Aplicação	Excelente para Aplicación	Excellent for Application
■ 性能良好	Bom para a Aplicação	Bueno para Aplicación	Good for Application
实例 10 = 外缘处的切削速度，米/分，+/- 10%	Exemplo 10 = Velocidade periférica em metros/minuto +/- 10%	Ejemplo 10 = Velocidad Periférica en metros/minuto +/- 10%	Example 10 = Peripheral speed in metres/minute +/- 10%
产品型号	Código	Código de producto	Product Codes
尺寸范围	Gama de medidas	Rango de Diámetros	Size Range

AMG	中文	Português	Español	English
1.1	铁磁性低碳钢	Aço macio magnético	Acero blando	Magnetic soft steel
1.2	结构钢, 表面渗碳钢	Aço estrutural, Aço cementado	Acero de construcción/cementación	Structural steel, case carburizing steel
1.3	普通碳钢	Aço-carbono	Acero al carbono	Plain Carbon steel
1.4	合金钢	Aço de liga	Acero aleado	Alloy steel
1.5	合金钢, 淬火回火钢	Aço de liga, Aço temperado	Acero aleado/temple y revenido	Alloy steel, Hardened and tempered steel
1.6	合金钢, 淬火回火钢	Aço de liga, Aço temperado	Acero aleado/temple y revenido	Alloy steel, Hardened and tempered steel
1.7	热处理合金钢	Aço de liga temperado	Acero aleado cementado	Alloy steel, Heat treated
1.8	淬火合金钢, 耐磨钢	Aço de liga temperado	Acero aleado cementado	Alloy steel, Hardened & Wear resistant steel
2.1	易切削不锈钢	Aço inoxidável de maquinagem fácil	Acero inoxidable fácil mecanizado	Free machining, Stainless Steel
2.2	奥氏体不锈钢	Austenítico	Austenítico	Austenitic
2.3	铁素体 + 奥氏体, 马氏体不锈钢	Ferrítico + Austenítico + Martensítico	Ferritico, Ferr. + Aust., Marten	Ferritic + Austenitic, Ferritic, Martensitic
2.4	沉淀硬化不锈钢	Aço inoxidável de fácil usinagem	Acero Inoxidable Templado	Precipitation Hardened
3.1	灰铸铁	Grafite laminar	Con grafito laminar	Lamellar graphite
3.2	灰铸铁	Grafite laminar	Con grafito laminar	Lamellar graphite
3.3	球墨铸铁, 可锻铸铁	Grafite nodular/ Ferro fundido maleável	Con graf. laminar, fundic. maleable	Nodular graphite, Malleable Cast Iron
3.4	球墨铸铁, 可锻铸铁	Grafite nodular/ Ferro fundido maleável	Con graf. laminar, fundic. maleable	Nodular graphite, Malleable Cast Iron
4.1	纯钛	Titânio, sem liga	Titanio no aleado	Titanium, unalloyed
4.2	钛合金	Titânio, com liga	Titanio aleado	Titanium, alloyed
4.3	钛合金	Titânio, com liga	Titanio aleado	Titanium, alloyed
5.1	纯镍	Níquel, sem liga	Níquel no aleado	Nickel, unalloyed
5.2	镍合金	Níquel, com liga	Níquel aleado	Nickel, alloyed
5.3	镍合金	Níquel, com liga	Níquel aleado	Nickel, alloyed
6.1	紫铜	Cobre	Cobre	Copper
6.2	β黄铜, 青铜	Latão beta, bronze	β-Latón, bronce	β-Brass, Bronze
6.3	α黄铜	Latão alfa	α-Latón	α-Brass
6.4	高强度青铜	Bronze de alta resistência	Metal AMPCO	High Strength Bronze
7.1	纯铝, 纯镁	Al, Mg, sem liga	Al, Mg, no aleado	Al, Mg, unalloyed
7.2	铝合金, 硅含量 < 0.5%	Al com liga, Si<0.5%	Al aleado con Si < 0.5%	Al alloyed, Si < 0.5%
7.3	铝合金, 硅含量 > 0.5% < 10%	Al com liga, Si>0.5%<10%	Al aleado con Si > 0.5% < 10%	Al alloyed, Si > 0.5% < 10%
7.4	铝合金, 硅含量 > 10% 晶须增强铝合金, 镁合金	Al com liga, Si>10% reforçadas com monocristais filiformes, ligas de Al/Mg	Al aleado, Si>10% Reforzado por filamentos, Al-aleados, Mg-aleados	Al alloyed, Si > 10% Whisker reinforced Al-alloys Mg-alloys
8.1	调整字体大小, 适应排版需要	Termoplásticos	Termoplásticos	Thermoplastics
8.2	热固性塑料	Plásticos termoduros	Plásticos endurecidos por calor	Thermosetting plastics
8.3	增强塑料	Materiais plásticos reforçados	Materiales plásticos reforzados	Reinforced plastic materials
9.1	金属陶瓷	Cerametal (metalocerâmica)	Cerametales (metales-cerámicas)	Cermets (metals-ceramics)
10.1	标准石墨	Grafite standard	Grafito standard	Graphite

DORMER

	S802HA	S802HB	S812HA	S812HB	S822	S803HA	S803HB	S813HA	S813HB	S823	S710	S902	S922	S713	S903	S933	
	HM	HM	HM	HM	HM	HM	HM	HM	HM	HM	HM	HM	HM	HM	HM	HM	
	P9	P9	P9	P9	P9	P9	P9	P9	P9	P9							
	N	N	N	N	N	N	N	N	N	N	N	N	N	N	N	N	
	Z 2	Z 2	Z 2	Z 2	Z 2	Z 3	Z 3	Z 3	Z 3	Z 3	Z 2	Z 2	Z 2	Z 3	Z 3	Z 3	
	λ 28° γ 9°	λ 28° γ 9°	λ 28° γ 9°	λ 28° γ 9°	λ 28° γ 9°	λ 28° γ 9°	λ 28° γ 9°	λ 28° γ 9°	λ 28° γ 9°	λ 28° γ 9°	λ 40° γ 10°	λ 30° γ 12°	λ 30° γ 12°	λ 40° γ 10°	λ 30° γ 12°	λ 30° γ 12°	
	DIN 6535HA	DIN 6535HB	DIN 6535HA	DIN 6535HB	DIN 6535HA	DIN 6535HA	DIN 6535HB	DIN 6535HA	DIN 6535HB	DIN 6535HA	DIN 6535HA	DIN 6535HA	DIN 6535HB	DIN 6535HA	DIN 6535HA	DIN 6535HB	
	Alcrona	Alcrona	Alcrona	Alcrona	Alcrona	Alcrona	Alcrona	Alcrona	Alcrona	Alcrona	AlCrN		TiAlN	AlCrN		TiAlN	
											h9	h10	h10	h9	h10	h10	
	DIN 6527K	DIN 6527K	DIN 6527L	DIN 6527L	DORMER	DIN 6527K	DIN 6527K	DIN 6527L	DIN 6527L	DORMER	DORMER	DORMER	DORMER	DORMER	DORMER	DORMER	
	1.00 - 20.00	1.80 - 20.00	2.00 - 20.00	2.00 - 20.00	2.00 - 20.00	1.00 - 20.00	1.80 - 20.00	2.00 - 20.00	2.00 - 20.00	2.00 - 20.00	1.00 - 20.00	2.00 - 20.00	2.00 - 20.00	1.50 - 20.00	2.00 - 20.00	2.00 - 20.00	
AMG	384	384	385	385	386	387	387	388	388	389	390	391	391	392	393	393	ISO
1.1	■260B	■260B	■210B	■210B	■180B	■260B	■260B	■210B	■210B	■180B	■140C	■65B	■95B	■140C	■65B	■95B	P 1
1.2	■260B	■260B	■210B	■210B	■180B	■260B	■260B	■210B	■210B	■180B	■140C	■65B	■95B	■140C	■65B	■95B	P 1
1.3	■155B	■155B	■125B	■125B	■110B	■155B	■155B	■125B	■125B	■110B	■130C	■55B	■80B	■130C	■55B	■80B	P 2
1.4	■155B	■155B	■125B	■125B	■110B	■155B	■155B	■125B	■125B	■110B	■130C	■50B	■75B	■130C	■50B	■75B	P 3
1.5	■115B	■115B	■90B	■90B	■80B	■115B	■115B	■90B	■90B	■80B	■120C	●30B	■45B	■120C	●30B	■45B	P 4
1.6	■90B	■90B	■75B	■75B	■65B	■90B	■90B	●75B	●75B	●65B			●30B			●30B	H 1
1.7																	H 3
1.8																	H 4
2.1	■105A	■105A	■75A	■75A	■70A	■105A	■105A	■85A	■85A	■70A	■80B			■80B			M 1
2.2	■70A	■70A	■55A	■55A	■50A	■70A	■70A	●55A	●55A	●50A	■70B			■70B			M 3
2.3	●70A	●70A	■55A	■55A	■50A	●70A	●70A	●55A	●55A	●50A							M 2
2.4	●50A	●50A				●50A	●50A										S 2
3.1	■180B	■180B	■145B	■145B	■125B	■180B	■180B	■145B	■145B	■125B	■170C	■55B	■80B	■170C	■55B	■80B	K 1
3.2	■110B	■110B	■85B	■85B	■75B	■110B	■110B	■85B	■85B	■75B	■150C	●30B	■45B	■150C	●30B	■45B	K 2
3.3	■145B	■145B	■115B	■115B	■100B	■145B	■145B	■115B	■115B	■100B	■130C	■55B	■80B	■130C	■55B	■80B	K 3
3.4	■95B	■95B	■75B	■75B	■65B	■95B	■95B	■75B	■75B	■65B	■120C	●30B	■45B	■120C	●30B	■45B	K 4
4.1	●170B	●170B	■140B	■140B	■120B	●170B	●170B	●140B	●140B	●120B		■65B	■95B		■65B	■95B	S 1
4.2	●115B	●115B	■90B	■90B	■80B	●115B	●115B	●90B	●90B	●80B	■70B	●30B	●45B	■70B	●30B	●45B	S 2
4.3												●15B	●20B		●15B	●20B	S 3
5.1	●165B	●165B	■130B	■130B	■115B	●165B	●165B	●130B	●130B	●115B		■65B	■95B		■65B	■95B	S 1
5.2	●35A	●35A	■25A	■25A	■25A	●35A	●35A	●25A	●25A	●25A	■70B			■70B			S 2
5.3																	S 3
6.1	●320C	●320C	■255C	■255C	■220C	●320C	●320C	●255C	●255C	●220C		■110C	■155C		■110C	■155C	N 3
6.2	■320C	■320C	■255C	■255C	■220C	■320C	■320C	■255C	■255C	■220C		■110C	■155C		■110C	■155C	N 4
6.3	■320C	■320C	■255C	■255C	■220C	■320C	■320C	■255C	■255C	■220C		■110C	■155C		■110C	■155C	N 3
6.4	■40B	■40B	■30C	■30C	■25B	■40B	■40B	■30C	■30C	■25B		●15B	●20B		●15B	●20B	N 4
7.1	●800C	●800C	■640C	■640C	■550C	●800C	●800C	●640C	●640C	●550C		●275C	●390C		●275C	●390C	N 1
7.2	■800C	■800C	■640C	■640C	■550C	■800C	■800C	■640C	■640C	■550C		●275C	●390C		●275C	●390C	N 1
7.3	■480C	■480C	■380C	■380C	■330C	■480C	■480C	■380C	■380C	■330C		●165C	●235C		●165C	●235C	N 1
7.4	■240B	■240B	■190B	■190B	■160B	■240B	■240B	■190B	■190B	■160B							N 2
8.1	●320C	●320C	■255C	■255C	■245C	●320C	●320C	●255C	●255C	●245C		●110C	●155C		●110C	●155C	O
8.2	●320C	●320C	■255C	■255C	■245C	●320C	●320C	●255C	●255C	●245C		●110C	●155C		●110C	●155C	O
8.3												●30B	●45B		●30B	●45B	O
9.1																	H
10.1																	O

DORMER

	S714	S715	S637	S638	S610	S611	S804HA	S804HB	S219	S814HA	S814HB	S716	S612	S216	S904	S944
	HM	HM	HM	HM	HM	HM	HM	HM	HM	HM	HM	HM	HM	HM	HM	HM
	N	N	W	W	W	W	N	N	N	N	N	N	N	N	N	N
	Z 3	Z 3	Z 1	Z 2	Z 2	Z 2	Z 4	Z 4	Z 4	Z 4	Z 4	Z 4	Z 4	Z 4	Z 4	Z 4
	λ40° γ10°	λ40° γ10°	λ25° γ20°	λ30° γ20°	λ30° γ20°	λ30° γ20°	λ34° γ9°	λ34° γ9°	λ40° γ3°	λ34° γ9°	λ34° γ9°	λ40° γ10°	λ40° γ10°	λ40° γ3°	λ30° γ12°	λ30° γ12°
	DIN 6535HA	DIN 6535HA	DIN 6535HA	DIN 6535HA	DIN 6535HA	DIN 6535HA	DIN 6535HA	DIN 6535HB	DIN 6535HA	DIN 6535HA	DIN 6535HB	DIN 6535HA	DIN 6535HA	DIN 6535HA	DIN 6535HA	DIN 6535HB
	AlCrN	AlCrN	Hi	Hi	Hi	Hi	Alcrona	Alcrona	AlTiN	Alcrona	Alcrona	AlCrN	Diamond	AlTiN		TiAlN
	h9	h9	h9	h9	h9	h9	h10	h10	h9	h10	h10	h9	h9	h9	h12	h12
	DORMER	DORMER	DORMER	DORMER	DORMER	DORMER	DIN 6527K	DIN 6527K	DORMER	DIN 6527L	DIN 6527L	DORMER	DORMER	DORMER	DORMER	DORMER
	3.00 - 20.00	3.00 - 20.00	2.00 - 12.00	6.20 - 20.30	3.00 - 20.00	6.00 - 20.00	2.00 - 25.00	2.00 - 25.00	3.00 - 20.00	2.00 - 25.00	2.00 - 25.00	2.00 - 20.00	1.00 - 12.00	2.00 - 20.00	2.00 - 20.00	2.00 - 20.00
AMG	394	395	396	397	398	399	400	400	401	402	402	403	404	405	406	406	ISO
1.1	■110C	■70C					■360B	■360B		■270B	■270B	■140C			■95B	■140B	P 1
1.2	■110C	■70C					■300B	■300B		■225B	■225B	■140C			■95B	■140B	P 1
1.3	■100C	■65C					■230B	■230B		■175B	■175B	■130C			■80B	■120B	P 2
1.4	■100C	■65C					■230B	■230B		■175B	■175B	■130C			■70B	■105B	P 3
1.5	■95C	■60C					■165B	■165B		■125B	■125B	■120C			●55B	■80B	P 4
1.6							■130B	■130B	■90C	●100B	●100B			■90C	●30B	●45B	H 1
1.7																	H 3
1.8																	H 4
2.1	■65B	■40B					■165A	■165A		■125A	■125A	■80B					M 1
2.2	■55B	■35B					■110A	■110A		●85A	●85A	■70B					M 3
2.3							●110A	●110A	■70B	●85A	●85A			■70B			M 2
2.4							●75A	●75A	■50B					■50B			S 2
3.1	■135C	■85C					■275B	■275B		■205B	■205B	■170C			■80B	■120B	K 1
3.2	■120C	■75C					■165B	■165B		■125B	■125B	■150C			●55B	■80B	K 2
3.3	■100C	■65C					■165B	■165B		■125B	■125B	■130C			■70B	■105B	K 3
3.4	■95C	■60C					■135B	■135B		■105B	■105B	■120C			●55B	■80B	K 4
4.1							●275B	●275B		●205B	●205B				■95B	■140B	S 1
4.2	■55B	■35B					●140B	●140B		●105B	●105B	■70B			●40B	●60B	S 2
4.3									■50B					■50B	●30B	●45B	S 3
5.1							●275B	●275B		●205B	●205B				■135B	■200B	S 1
5.2	■55B	■35B					●55A	●55A		●40A	●40A	■70B			●30A	●45A	S 2
5.3									■50B					■50B	●25A	●35A	S 3
6.1	●200E	●125E	■350E	■400E	■350E	■280E	●320C	●320C		●255C	●255C				■110C	■155C	N 3
6.2	●190E	●115E	■300E	■345E	■300E	■240E	■320C	■320C		■255C	■255C				■110C	■155C	N 4
6.3	●175E	●110E	■250E	■290E	■250E	■200E	■320C	■320C		■255C	■255C				■110C	■155C	N 3
6.4	●160E	●100E	■200E	■230E	■200E	■160E	■40B	■40B		■32C	■32C				●15B	●20B	N 4
7.1	●200E	●125E	■600E	■690E	■600E	■480E	●800C	●800C		●640C	●640C				●275C	●390C	N 1
7.2	●190E	●115E	■500E	■575E	■500E	■400E	●800C	●800C		●640C	●640C				●275C	●390C	N 1
7.3	●175E	●110E	■400E	■460E	■400E	■320E	●480C	●480C		●380C	●380C				●165C	●235C	N 1
7.4	●160E	●100E	■350E	■400E	■350E	■280E	●240B	●240B		●190B	●190B						N 2
8.1			■800E	■980E	■800E	■640E	●320C	●320C		●255C	●255C				●110C	●155C	O
8.2			■800E	■980E	■800E	■640E	●320C	●320C		●255C	●255C				●110C	●155C	O
8.3															●55B	●80B	O
9.1																	H
10.1													■350A				O

	HM	HM	HM	HM	HM	HM	HM	HM	HM	HM	HM	HM	HM	HM	HM	HM	HM
	N	N	N	N	N	N	N	N	N	N	N	N	N	NR	NR	N	N
	Z 4	Z 4	Z 4	Z 4	Z 4	Z 4	Z 4	Z 6-8	Z 6-8	Z 6-8	Z 6-8	Z 6-8	Z 6-8	Z 4	Z 4	Z 4	Z 4
	λ40° γ10°	λ40° γ3°	λ40° γ10°	λ40° γ3°	λ40° γ10°	λ40° γ4°	λ≠ γ10°	λ50° γ3°	λ50° γ-26°	λ50° γ3°	λ50° γ-26°	λ50° γ3°	λ50° γ-26°	λ40° γ10°	λ40° γ4°	λ40° γ-6°	λ45° γ-10°
	DIN 6535HA	DIN 6535HA	DIN 6535HA	DIN 6535HA	DIN 6535HA	DIN 6535HA	DIN 6535HA	DIN 6535HA	DIN 6535HA	DIN 6535HA	DIN 6535HA	DIN 6535HA	DIN 6535HA	DIN 6535HA	DIN 6535HB	DIN 6535HA	DIN 6535HA
	AlCrN	ATiN	AlCrN	ATiN	AlCrN	AlCrN	TiSiN	ATiN	TiSiN	ATiN	TiSiN	ATiN	TiSiN	AlCrN	AlCrN	TiSiN	TiSiN
	h9	h9	h9	h9	h9	h9	h9	h9	h9	h9	h9	h9	h9	h9	h9	h9	h9
	DORMER	DORMER	DORMER	DORMER	DORMER	DORMER	DORMER	DORMER	DORMER	DORMER	DORMER	DORMER	DORMER	DORMER	DORMER	DORMER	DORMER
																	
	S717	S217	S718	S218	S761	S260	S766	S225	S525	S226	S526	S227	S527	S765	S264	S524	S521
	3.00 - 20.00	3.00 - 20.00	3.00 - 20.00	3.00 - 20.00	3.00 - 20.00	3.00 - 20.00	4.00 - 20.00	3.00 - 20.00	3.00 - 20.00	3.00 - 20.00	3.00 - 20.00	6.00 - 20.00	3.00 - 20.00	6.00 - 20.00	6.00 - 20.00	3.00 - 16.00	3.00 - 16.00

AMG	407	407	408	408	409	409	410	411	411	412	412	413	413	414	415	416	417	ISO
1.1	■110C		■70C		■140D		■140D							■140D				P 1
1.2	■110C		■70C		■140D		■140D							■140D				P 1
1.3	■100C		■65C		■130D		■130D							■130D				P 2
1.4	■100C		■65C		■130D		■130D							■130D				P 3
1.5	■95C		■60C		■120D		■120D							■120D				P 4
1.6		■72C		■45C		■110D		■90C		■72C		■45C			■110D			H 1
1.7						■85B			■70A		■56A		■35A		■85B	■56A	■70A	H 3
1.8									■50A		■40A		■25A			■40A	■50A	H 4
2.1	■65B		■40B		■80C		■80C							■80C				M 1
2.2	■55B		■35B		■70C		■70C							■70C				M 3
2.3		■56B		■35B		■70C		■70B		■56B		■35B			■70C			M 2
2.4		■40B		■25B		■50C		■50B		■40B		■25B			■50C			S 2
3.1	■135C		■85C		■170D		■170D							■170D				K 1
3.2	■120C		■75C		■150D		■150D							■150D				K 2
3.3	■100C		■65C		■130D		■130D							■130D				K 3
3.4	■95C		■60C		■120D		■120D							■120D				K 4
4.1																		S 1
4.2	■55B		■35B		■70C		■70C							■70C				S 2
4.3		■40B		■25B		■50C		■50B		■40B		■25B			■50C			S 3
5.1																		S 1
5.2	■55B		■35B		■70C		■70C							■70C				S 2
5.3		■40B		■25B		■50C		■50B		■40B		■25B			■50C			S 3
6.1	●200E		●125E															N 3
6.2	●190E		●115E															N 4
6.3	●175E		●110E															N 3
6.4	●160E		●100E															N 4
7.1	●200E		●125E															N 1
7.2	●190E		●115E															N 1
7.3	●175E		●110E															N 1
7.4	●160E		●100E															N 2
8.1																		O
8.2																		O
8.3																		O
9.1																		H
10.1																		O

DORMER

	HM	HM	HM	HM	HM	HM	HM	HM	HM	HM	HM	HM	HM	HM	HM	HM	HM	HM	HM
	N	N	N	N	N	N	N	N	N	N	N	N	N	N	N	W	N	N	N
	Z 4	Z 4	Z 4	Z 4	Z 4-6	Z 2	Z 2	Z 2	Z 2	Z 2	Z 2	Z 2	Z 4	Z 4	Z 4	Z 2	Z 2	Z 2	Z 2
	λ40° γ-6°	λ40° γ10°	λ40° γ4°	λ≠ γ10°	λ25° γ0°	λ30° γ3°	λ30° γ3°	λ30° γ3°	λ30° γ-10°	λ30° γ-10°	λ30° γ-10°	λ30° γ10°	λ30° γ-10°	λ30° γ-10°	λ30° γ10°	λ30° γ15°	λ40° γ10°	λ40° γ10°	λ40° γ10°
	DIN 6535HA	DIN 6535HA	DIN 6535HA	DIN 6535HA	DIN 6535HA	DIN 6535HA	DIN 6535HA	DIN 6535HA	DIN 6535HA	DIN 6535HA	DIN 6535HA	DIN 6535HA	DIN 6535HA	DIN 6535HA	DIN 6535HA	DIN 6535HA	DIN 6535HA	DIN 6535HA	DIN 6535HA
	TiSiN	AlCrN	AlCrN	TiSiN	TiSiN	TiSiN	TiSiN	TiSiN	TiSiN	TiSiN	TiSiN	X-CEED	TiSiN	TiSiN	X-CEED	Hi	AlTiN	AlTiN	AlTiN
	h9	h9	h9	h9	h9	h9	h9	h9	h9	h9	h9	h9	h9	h9	h9	h9	h9	h9	h9
	DORMER	DORMER	DORMER	DORMER	DORMER	DORMER	DORMER	DORMER	DORMER	DORMER	DORMER	DORMER	DORMER	DORMER	DORMER	DORMER	DORMER	DORMER	DORMER
																			
	S523	S763	S262	S767	S536	S229	S231	S233	S529	S531	S533	S501	S534	S535	S511	S629	S739	S740	S741
	1.50 - 16.00	3.00 - 20.00	3.00 - 20.00	4.00 - 20.00	6.00 - 12.00	1.50 - 16.00	1.50 - 16.00	2.00 - 16.00	1.50 - 16.00	1.50 - 16.00	2.00 - 16.00	1.00 - 16.00	3.00 - 16.00	3.00 - 16.00	3.00 - 16.00	3.00 - 20.00	3.00 - 20.00	3.00 - 20.00	3.00 - 20.00
AMG	418	419	420	422	423	424	425	426	427	428	429	430	431	432	433	434	435	435	435	ISO
1.1		■140D		■140D								■181B			■230B		■140C	■140C	■140C	P 1
1.2		■140D		■140D								■181B			■192B		■140C	■140C	■140C	P 1
1.3		■130D		■130D								■118B			■153B		■130C	■130C	■130C	P 2
1.4		■130D		■130D								■118B			■153B		■130C	■130C	■130C	P 3
1.5		■120D		■120D								■90B			■115B		■120C	■120C	■120C	P 4
1.6			■110D			■630C	■500C	■315C				■72B			■92B					H 1
1.7	■70A		■85B		■105E				■330A	■260A	■165A	●45A	■330A	■260A	●61A					H 3
1.8	■50A				■75E				■280A	■225A	■140A		■280A	■225A						H 4
2.1		■80C		■80C								■81A			■115A		■80B	■80B	■80B	M 1
2.2		■70C		■70C								■54A			■76A		■70B	■70B	■70B	M 3
2.3			■70C			■540B	■430B	■270B				■54A			■76A					M 2
2.4			■50C			■315B	■250B	■155B												S 2
3.1		■170D		■170D								■136B			■192B		■170C	■170C	■170C	K 1
3.2		■150D		■150D								■81B			■115B		■155C	■155C	■155C	K 2
3.3		■130D		■130D								■109B			■115B		■145C	■145C	■145C	K 3
3.4		■120D		■120D								■72B			■96B		■130C	■130C	■130C	K 4
4.1												■136B			■192B					S 1
4.2		■70C		■70C								■90B			■96B		■70B	■70B	■70B	S 2
4.3			■50C			■315B	■250B	■155B				■45B			■61B					S 3
5.1												■136B			■192B					S 1
5.2		■70C		■70C								■27A			■38A		■70B	■70B	■70B	S 2
5.3			■50C			■315B	■250B	■155B				■22A			■30A					S 3
6.1												■363C			●384C	■350E	■250E	■250E	■250E	N 3
6.2												■363C			●384C	■300E	■235E	■235E	■235E	N 4
6.3												■363C			●384C	■250E	■220E	■220E	■220E	N 3
6.4												■54B			●61B	■200E	■200E	■200E	■200E	N 4
7.1												■950C			●950C	■600E	■250E	■250E	■250E	N 1
7.2												■950C			●950C	■500E	■235E	■235E	■235E	N 1
7.3												■681C			■576C	■400E	■220E	■220E	■220E	N 1
7.4												■363B			■307B	■350E	■200E	■200E	■200E	N 2
8.1												■318C			●307C	■800E				O
8.2												■318C			■307C	■800E				O
8.3												■318B			■307B					O
9.1												■5A			■9A					H
10.1																				O

		HSS-E PM	HSS-E PM	HSS-E PM	HSS-E PM	HSS-E	HSS-E PM	HSS-E PM	HSS-E PM	HSS-E PM	HSS-E PM	HSS-E	HSS-E	HSS-E PM	HSS-E PM	HSS-E
		P9	P9	P9	P9	P9	P9	P9	P9	P9	P9	P9	P9			
		N	N	N	N	N	N	N	N	N	N	W	W	W	W	N
		Z 2	Z 2	Z 2	Z 2	Z 2	Z 3	Z 3	Z 3	Z 3	Z 3	Z 2	Z 2	Z 3	Z 3	Z 2
		λ30° γ12°	λ30° γ12°	λ30° γ12°	λ30° γ12°	λ30° γ12°	λ30° γ12°	λ30° γ12°	λ40° γ15°	λ30° γ12°	λ30° γ12°	λ40° γ20°	λ40° γ20°	λ40° γ25°	λ40° γ25°	λ30° γ12°
		DIN 1835B	DIN 1835B	DIN 1835B	DIN 1835B	DIN 1835B	DIN 1835B	DIN 1835B	DIN 1835B	DIN 1835B	DIN 1835B	DIN 1835B	DIN 1835B	DIN 1835B	DIN 1835B	DIN 1835A
			TiCN		TiCN			Alcrona	Alcrona		Alcrona		TiCN		Alcrona	
		e8	e8	e8	e8	e8	e8 h10	e8 h10	e8	e8	e8	e8	e8	k10	k10	js14
		DIN 327D	DIN 327D	DIN 844K	DIN 844K	DORMER	DIN 327D	DIN 327D	DIN 327D	DIN 844K	DIN 844K	DIN 844K	DIN 844K	DIN 844K	DIN 844K	DORMER
		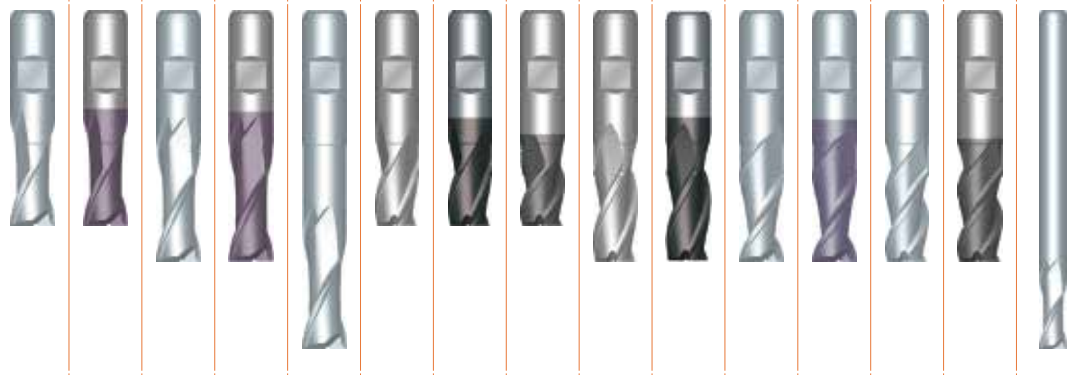														
	S991	**C110**	**C126**	**C123**	**C139**	**C135**	**C306**	**C353**	**C367**	**C305**	**C352**	**C159**	**C169**	**C336**	**C358**	**C167**
	Set	1.00 - 50.00	1.00 - 30.00	1/16 - 40.00	2.00 - 30.00	2.00 - 20.00	3.00 - 30.00	3.00 - 30.00	2.00 - 20.00	2.00 - 32.00	3.00 - 20.00	2.00 - 20.00	2.00 - 12.00	10.00 - 30.00	10.00 - 30.00	6.00 - 16.00
AMG	**437**	**438**	**438**	**440**	**440**	**442**	**443**	**443**	**444**	**445**	**445**	**446**	**446**	**447**	**447**	**448**
1.1		■60A	■135A	■55A	■120A	■50A	●53A	●145A	■146A	●56A	●135A	■50A	■100A	●55A	●133A	■50A
1.2		■50A	■105A	■45A	■95A	■40A	■49A	■120A	■117A	■44A	■105A	●40A	■80A	●44A	■106A	■40A
1.3		●40B	■95B	■40B	■85B	●35B	■41B	■100B	●102B	■39B	■95B	●35B	●70B	●38B	●93B	●35B
1.4		●35B	■80B	■35B	■70B	●30B	●35B	■85B	●87B	●33B	■80B					●30B
1.5			●55C		●50C			■60C			■55C					
1.6			●25C		●20C			●25C			●25C					
1.7																
1.8																
2.1		●30F	●45F	●25F	●45F	●25F	●26F	●50F	■67F	●26F	●50F	●23F	●34F	●25F	●48F	●25F
2.2								●45F	■55F		●40F	●19F	●29F	●21F	●40F	
2.3			●25F		●25F			●30F	■35F		●25F		●18F		●26F	
2.4									■25F							
3.1		●35A	■60A	●30A	■55A	●30A	●32A	■65A		●30A	■60A					●30A
3.2		●30A	■50A	●25A	■45A	●25A	●27A	■55A		●25A	■50A					●25A
3.3		●50B	■90B	●45B	■80B	●40B	●48B	■95B		●45B	■90B					●40B
3.4		●30B	■55B	●30B	■50B	●25B	●30B	■60B		●27B	■55B					●25B
4.1		■35D	■45D	■30D	■45D	●30D	■33D	■50D	●50D	■29D	■45D	●28D	●36D	●30D	●46D	●30D
4.2		●25D	■40D	●25D	■35D	●25D	●26D	■40D		●24D	■35D		●29D		●37D	●25D
4.3			●15D		●15D			●20D			●15D					
5.1		■60D	■130D	■50D	■115D	■50D	■58D	■140D	●140D	■51D	■125D	●48D	●96D	●52D	●127	■50D
5.2		●15C	■25C	●15C	■25C	●15C	●15C	■30C		■13C	■25C		●19D		●27	●15C
5.3			●10D		●10D			●15D			●10D					
6.1		■85C	■190C	■80C	■170C	■70C	■110C	■210C	■209C	■100C	■190C	■100C	■200C	■100C	■240C	■75C
6.2		■85C	■190C	■80C	■170C	■70C	■110C	■210C	●209C	■100C	■190C	■100C	■200C	■100C	■240C	■75C
6.3		■85C	■190C	■80C	■170C	■70C	■110C	■210C	●209C	■100C	■190C	■100C	■200C	■100C	■240C	■75C
6.4			●25C		●25C			●30C			●25C					
7.1		●220E	●480E	●200E	●435E	●180E			■528E			■250E	■500E	■250E	■600E	●200E
7.2		●220E	●480E	●200E	●435E	●180E	●219E	●530E	●528E	●198E	●480E	●250E	■500E	●250E	■600E	●200E
7.3		●85E	●190E	●80E	●170E	●70E	●86E	●210E	●209E	●79E	●190E	■100E	■200E	■100E	■240E	●75E
7.4			●95A		●85A			●105A			●95A				■120A	
8.1		●90C	●190C	●80C	●175C	●70C	●72C	●210C	●209C	●65C	●190C	■100C	■200C	■100E	■240A	●80C
8.2												■100C	■200C	■100E	■240A	
8.3																
9.1																
10.1																

ISO
P 1
P 1
P 2
P 3
P 4
H 1
H 3
H 4
M 1
M 3
M 2
S 2
K 1
K 2
K 3
K 4
S 1
S 2
S 3
S 1
S 2
S 3
N 3
N 4
N 3
N 4
N 1
N 1
N 1
N 2
O
O
O
H
O

DORMER

	C122	C346	C299	C907	C903	C920	C247	C246	C273	C295	C166	C333	C359	C324	C922	C428	C492
	HSS-E	HSS-E	HSS-E PM	HSS-E PM	HSS-E PM	HSS-E PM	HSS-E PM	HSS-E PM	HSS-E PM	HSS-E PM	HSS-E	HSS-E PM	HSS-E PM	HSS-E PM	HSS-E PM	HSS-E PM	HSS-E PM
	N	N	N	N	N	N	N	N	N	N	W	W	W	HRA	HRA	HRA	HRA
	Z 2	Z 3	Z 3-5	Z 3-6	Z 3-5	Z 3-5	Z 4-8	Z 4-6	Z 4-6	Z 4-6	Z 2	Z 3	Z 3	Z 3	Z 3-4	Z 4-6	Z 3-6
	λ30° γ12°	λ30° γ12°	λ45° γ12°	λ45° γ12°	λ45° γ12°	λ45° γ12°	λ30° γ12°	λ30° γ12°	λ30° γ12°	λ30° γ12°	λ40° γ20°	λ40° γ25°	λ40° γ25°	λ35° γ12°	λ35° γ12°	λ35° γ12°	λ35° γ12°
	DIN 1835A	DIN 1835B	DIN 1835B	DIN 1835B	DIN 1835B	DIN 1835B	DIN 1835B	DIN 1835B	DIN 1835B	DIN 1835B	DIN 1835B	DIN 1835B	DIN 1835B	DIN 1835B	DIN 1835B	DIN 1835B	DIN 1835B
				Alcrona		Alcrona		TiCN		TiCN			Alcrona	Alcrona	Alcrona	Alcrona	Alcrona
	e8	e8	k10	k10	k10	k10	k10	k10	k10	k10	e8	k10	k10	k12	k12	k12	k12
	DORMER	DIN 844L	DIN 844K	DIN 844K	DIN 844L	DIN 844L	DIN 844K	DIN 844K	DIN 844L	DIN 844L	DIN 844L	DIN 844L	DIN 844L	DIN 327D	DIN 844K	DIN 844K	DIN 844L
	5.00 - 30.00	3.00 - 20.00	3.00 - 25.00	3.00 - 32.00	6.00 - 25.00	6.00 - 25.00	2.00 - 50.00	2.00 - 25.00	2.00 - 40.00	2.00 - 40.00	6.00 - 12.00	10.00 - 30.00	10.00 - 30.00	8.00 - 30.00	6.00 - 32.00	6.00 - 40.00	6.00 - 30.00
AMG	449	450	451	451	452	452	453	453	455	455	457	458	458	459	460	461	462	ISO
1.1	■45A	●45A					■55S	■120S	■50S	■110S	■45A							P 1
1.2	■36A	■35A					■45S	■95S	■50S	■85S	●36A							P 1
1.3	●31B	●30B	■37T	■95T	■35T	■85T	■40T	■85T	■35T	■75T	●31B			●100H	●95H	●93H	■83H	P 2
1.4	●27B	●25B	■33T	■80T	■29T	■70T	●35T	■70T	●30T	■65T				■85H	■80H	■79H	■71H	P 3
1.5			■22U	■55U	■20U	■50U		●50U		●45U				■60I	■55I	■54I	■49I	P 4
1.6			●10U	■25U	●9U	■20U		●20U		●20U				■25I	■25I	■24I	■21I	H 1
1.7																		H 3
1.8																		H 4
2.1	●20F	●20F	■26Y	■50Y	■23Y	■45Y	●25Y	●45Y	●10Y	●40Y	●20F			■50L	■50L	■48L	■43L	M 1
2.2			●21Y	■40Y	●18Y	■35Y					●17F			■45L	■40L	■40L	■36L	M 3
2.3			■13Y	■25Y	■13Y	■25Y		●25Y		●20Y				■30L	■25L	■26L	■23L	M 2
2.4																		S 2
3.1	●25A	●25A	■30S	■60S	■27S	■55S	●30S	■55S	●25S	■50S				■65G	■60G	■61G	■55G	K 1
3.2	●20A	●20A	■25S	■50S	■22S	■45S	●25S	■45S	●20S	■40S				■55G	■50G	■50G	■45G	K 2
3.3	●36B	●35B	■45T	■90T	■39T	■80T	●45T	■79T	●40T	■70T				■95H	■90H	■88H	■79H	K 3
3.4	●22B	■20B	■27T	■55T	■24T	■50T	●25T	■49T	●25T	■45T				■60H	■55H	■55H	■49H	K 4
4.1	●25D	■25D	●29V	●45V	●26V	●40V	■30V	■43V	■25V	■40V	●25D			●50J	●45J	●46J	●41J	S 1
4.2	●20D	●20D	■57V	■85V	■23V	■35V	●25V	■35V	●20V	■30V				■40J	■35J	■37J	■34J	S 2
4.3			■10V	■15V	■10V	■15V		●15V		●15V				■20J	■15J	■16J	■15J	S 3
5.1	■43D	■45D	■51V	■125V	■47V	■115V	■50V	■116V	■45V	■105V	●43D			●140J	●125J	●127J	●114J	S 1
5.2	●11C	●10C	■13U	■25U	■13U	■25U	●15U	■24U	●10U	■20U				■30I	■25I	■27I	■24I	S 2
5.3			■5V	■10V	■5V	■10V		●10V		●10V				■15J	■10J	■11J	■10J	S 3
6.1	■112C	■70C					■80U	■170U	■70U	■155U	■90C	■90C	■215C					N 3
6.2	■112C	■70C	■100U	■190U	■89U	■170U	■80U	■170U	■70U	■155U	■90C	■90C	■215C	■210I	■190I	■190I	■170I	N 4
6.3	■112C	■70C					■80U	■170U	■70U	■155U	■90C	■90C	■215C					N 3
6.4								●25U		●20U				●30I	●25I	●25I	●23I	N 4
7.1	●270E	●180E					●200X	●435X	●180X	●390X	■225E	■225E	■540E					N 1
7.2	●270E	●180E					●200X	●435X	●180X	●390X	■225E	■225E	■540E					N 1
7.3	●81E						●80X	●170X	●70X	●155X	■90E	■90E	■215E					N 1
7.4			■39S	■95S	■35S	■85S		●85S		●75S			■110A	■105G	■95G	■95G	■85G	N 2
8.1	●112C	●70C					●80U	●175U	●70U	●155U	■90C	■90E	■215A					O
8.2											■90C	■90E	■215A					O
8.3																		O
9.1																		H
10.1																		O

	C407	C908	C944	C948	C921	C400	C413	C403	C429	C500	C503	C505	C511	C800	C810	C825
	HSS-E PM	HSS-E PM	HSS-E PM	HSS-E PM	HSS-E PM	HSS-E	HSS-E	HSS-E	HSS-E	HSS-E	HSS-E	HSS-E	HSS-E	HSS-E	HSS	HSS-E
	NRA	NRA	NRA	NRA	FS	NF	NF	NF	NF	N	N	N	N	N	N	N
	Z 4-6	Z 4-6	Z 4-6	Z 4-6	Z 3-6	Z 4-6	Z 4-6	Z 4-6	Z 4-6	Z 2	Z 2	Z 2	Z 2	Z 6-8	Z 6-8	Z 8-12
	λ35° γ12°	λ35° γ12°	λ35° γ12°	λ35° γ12°	λ45° γ12°	λ30° γ12°	λ30° γ12°	λ30° γ12°	λ30° γ12°	λ30° γ12°	λ30° γ12°	λ30° γ12°	λ30° γ12°	λ15° γ10°	λ12° γ10°	λ15° γ15°
	DIN 1835B	DIN 1835B	DIN 1835B	DIN 1835B	DIN 1835B	DIN 1835B	DIN 1835B	DIN 1835B	DIN 1835B	DIN 1835B	DIN 1835B	DIN 1835B	DIN 1835B	DIN 1835	DIN 1835D	DIN 1835B
		Alcrona		Alcrona	Alcrona		TiCN		TiCN		TiCN					
	k12	k12	k12	k12	k10	k12	k12	k12	k12	e8	e8	e8	e8	d11	d11	js16
	DIN 844K	DIN 844K	DIN 844L	DIN 844L	DIN 844K	DIN 844K	DIN 844K	DIN 844L	DIN 844L	DIN 327D	DIN 327D	DIN 844K	DORMER	DIN 851	DORMER	DORMER
	6.00 - 32.00	6.00 - 40.00	6.00 - 40.00	6.00 - 32.00	6.00 - 32.00	6.00 - 50.00	6.00 - 32.00	10.00 - 50.00	10.00 - 32.00	2.00 - 25.00	2.00 - 25.00	3.00 - 30.00	3.00 - 20.00	11.00 - 50.00	12.50 - 40.00	40.00 - 63.00

AMG	463	463	464	464	465	466	466	467	467	468	469	469	470	471	472	473	ISO
1.1	•55G					•50G	•100G	•45G	•90G	■55S	■110S	■50S	■50S	■35P	■25P	■35P	P 1
1.2	■44G					■40G	■80G	■35G	■70G	■45S	■90S	■40S	■40S	■35P	■25P	■30P	P 1
1.3	■38H	■93H	■34H	■83H	■96N	■35H	■70H	■30H	■65H	•40T	■75T	•35T	•35T	■30O	■20O	■30O	P 2
1.4	■33H	■79H	■29H	■71H	■80N	•30H	■60H	•25H	■55H	•35T	■65T	•30T	•30T	■25O	■15O	■20O	P 3
1.5	■22I	■54I	■20I	■49I	■55O		•40I		•35I		•45U			■20N	•10N	■15N	P 4
1.6	•10I	•24I	•9I	■21I	■25O		•20I		•15I		•20U			■15N	•10N	■10N	H 1
1.7																	H 3
1.8																	H 4
2.1	■25L	■48L	■22L	■43L	■50R	•25L	•35L	•20L	•30L	•25Y	•35Y	•25Y	•25Y	■20M	■15M	■15M	M 1
2.2	•21L	■40L	•19L	■36L	■40R									■15M	•10M	■10M	M 3
2.3	■13L	■26L	■12L	■23L	■25R		•20L		•15L		•20Y			■10M	•10M	■10M	M 2
2.4																	S 2
3.1	■30G	■61G	■27G	■55G	■60M	•30G	■45G	•25G	■40G	•30S	■50S	•30S	•30S	■20P	■20P	■25P	K 1
3.2	■25G	■50G	■22G	■45G	■50M	•25G	■35G	•20G	■35G	•25S	■40S	•25S	•25S	■20P	■20P	■20P	K 2
3.3	■44H	■88H	■39H	■79H	■90N	•40H	■65H	•35H	■55H	•45T	■70T	•40T	•40T	■30O	■20O	■30O	K 3
3.4	■27H	■55H	■24H	■49H	■55N	•25H	■40H	•20H	■35H	•30T	■45T	•25T	•25T	■20O	■10O	■20O	K 4
4.1	•30J	•46J	•27J	•41J	•45P	•30J	•35J	•25J	•30J	■30V	■40V	■30V	■30V	■30P	■20P	■35P	S 1
4.2	■25J	■37J	■22J	■34J	■35P	•25J	■30J	•20J	■25J	•25V	■30V	•25V	•25V	■20P	•15P	■20P	S 2
4.3	■11J	■16J	■10J	■15J	■15P		•10J		•10J		•14V			■10O	•5O	■10O	S 3
5.1	•52J	•127J	•47J	•114J	•130P	•50J	•95J	•45J	•85J	■50V	■105V	■50V	■50V	■35P	■25P	■35P	S 1
5.2	■14I	■27I	■12I	■24I	■30O	•15I	■20I	•10I	■15I	•15U	■20V	•15U	•15U	■10O	•5O	■5O	S 2
5.3	■6J	■11J	■5J	■10J	■10P		•10J		•10J		•10V			■5N	•5N	■5N	S 3
6.1						•70I	•140I	•65I	•125I	■85U	■170U	■80U	■80U	■100Q	■50Q	■30Q	N 3
6.2	■100I	■190I	■89I	■170I	■190O	■70I	■140I	■65I	■125I	■85U	■170U	■80U	■80U	■100P	■55P	■35P	N 4
6.3						■70I	■140I	■65I	■125I	■85U	■170U	■80U	■80U	■35P	■20P	■35P	N 3
6.4	•13I	•25I	•12I	•23I	•25O		•20I		•15I		•25V			■15O	■5O	■10O	N 4
7.1										•220X	•435X	•200X	•200X	■250R	■60R	■70R	N 1
7.2						•180K	•360K	•160K	•325K	•220X	•435X	•200X	•200X	■250R	■50R	■70R	N 1
7.3						•70K	•140K	•65K	•125K	•85X	•170X	•80X	•80X	■65R	■30R	■30R	N 1
7.4	•39G	•95G	■35G	■85G	■95M		•70G		•65G		•85S			■45Q	•20Q	■20Q	N 2
8.1						•70I	•145I	•65I	•130I	•90U	•175U	•80U	•80U	■100R	•50R	■35R	O
8.2																	O
8.3																	O
9.1																	H
10.1														■45Q	•20Q	■20Q	O

DORMER

	C801	C822	C820	C837	C835	C830	C831	C710	C700	D200
	HSS-E	HSS-E	HSS	HSS	HSS	HSS-E	HSS-E	HSS	HSS-E	HSS-E
	NF	N	N	N	N	N	N	N	N	
	Z 6-8	Z 6-12	Z 6-12	Z 6-8	Z 6-8	Z 10-12	Z 10-12	Z 4	Z 4-6	Z 16-30
	λ12° γ10°	λ10° γ10°	λ12° γ10°	λ0° γ0°	λ0° γ0°	λ0° γ0°	λ0° γ0°	λ0° γ0°	λ0° γ0°	λ15° γ10°
	DIN 1835B	DIN1835	DIN 1835D	DIN 1835D	DIN 1835D	DIN 1835B	DIN 1835B		DIN 1835B	
	d11	h11				js16	js16			js16
	DIN 851	DIN 850	DORMER	DORMER	DORMER	DIN 1833C	DIN 1833D	BS 122/4	DORMER	DIN 885A
										
	16.00 - 32.00	4.50 - 45.50	10.50 - 45.50	13.00 - 38.00	1/2 - 1.1/2	12.00 - 32.00	12.00 - 32.00	1/16 - 1/2	1.00 - 20.00	50.00 - 200.00

AMG	474	475	476	478	479	480	481	482	483	484	ISO
1.1	■40P	■40P	■25P	■20P	■20P	■30P	■30P	■20P	■35P	■45P	P 1
1.2	■40P	■40P	■25P	■20P	■20P	■30P	■30P	■20P	■35P	■40P	P 1
1.3	■30O	■30O	■20O	■15O	■15O	■25O	■25O	■15O	■25O	■35P	P 2
1.4	■25O	■25O	■20O	■15O	■15O	■20O	■20O	■15O	■25O	■30P	P 3
1.5	■20N	■20N	●10N	●10N	●10N	■15N	■15N	●10N	■15N	■20P	P 4
1.6	■15N	■15N	●10N	●5N	●5N	■10N	■10N	●10N	■15N	■10P	H 1
1.7											H 3
1.8											H 4
2.1	■25M	■25M	■15M	■10M	■10M	■20M	■20M	■15M	■20M	■30P	M 1
2.2	■15M	■15M	■10M	●10M	●10M	■15M	■15M	■10M	■15M	■20P	M 3
2.3	■15M	■15M	●10M	●5M	●5M	■10M	■10M	●5M	■10M	■10Q	M 2
2.4											S 2
3.1	■25P	■25P	■20P	■15P	■15P	■20P	■20P	■20P	■20P	■30Q	K 1
3.2	■20P	■20P	■20P	■15P	■15P	■15P	■15P	■15P	■15P	■25Q	K 2
3.3	■35O	■30O	■20O	■15O	■15O	■25O	■25O	■15O	■25O	■40Q	K 3
3.4	■20O	■20O	■15O	■10O	■10O	■15O	■15O	■10O	■15O	■25Q	K 4
4.1	■30P	■30P	■20P	■15P	■15P	■25P	■25P	■15P	■25P	■30N	S 1
4.2	■20P	■20P	●15P	●10P	●10P	■15P	■15P	■10P	■20P	■20O	S 2
4.3	■10O	■10O	●10O	●5O	●5O	■10O	■10O	●5O	■10O	■15O	S 3
5.1	■40P	■35P	■25P	■20P	■20P	■30P	■30P	■20P	■35P	■40P	S 1
5.2	■10O	■10O	●5O	●5O	●5O	■10O	■10O	■5O	■10O	■15O	S 2
5.3	■5N	■5N	●5N	●5N	●5N	■5N	■5N	●5N	■5N	■10M	S 3
6.1	■110Q	■100Q	■50Q	■40Q	■40Q	■90Q	■90Q	■40Q	■90Q	■150P	N 3
6.2	■110P	■100P	■55P	■45P	■45P	■90P	■90P	■45P	■90P	■150P	N 4
6.3	■40P	■100P	■55P	■15P	■15P	■75P	■75P	■45P	■90P	■150P	N 3
6.4	■15O	■15O	●5O	●5O	●5O	■10O	■10O	●5O	■15O	■15M	N 4
7.1	■275R	■260R	■65R	■50R	■50R	■190R	■190R	■55R	■245R	■400Q	N 1
7.2	■275R	■260R	■50R	■40R	■40R	■190R	■190R	■40R	■230R	■400Q	N 1
7.3	■70R	■66R	■35R	■25R	■25R	■55R	■55R	■25R	■60R	■100Q	N 1
7.4	■45Q	■44Q	●20Q	●17Q	●17Q	■35Q	■35Q	●15Q	■40Q	■70Q	N 2
8.1	■110R	■100R	●50R	●40R	●40R	■75R	■75R			■150M	O
8.2											O
8.3											O
9.1											H
10.1	■45Q	■45Q	●20Q			■35Q	■35Q	●15Q	■40Q		O

	HSS-E	HSS	HSS	HSS	HSS	HSS	HSS	HSS-E	
								N	
	Z 28-44	Z 28-100	Z 40-200	Z 80-180	Z 100-140	Z 128-220	Z 160-350	Z 8-12	
	λ15° γ10°	γ15°	γ5°	γ18°	γ18°	γ18°	γ18°	λ30° γ12°	
				ST	ST	ST	ST		
	js16							js16	
	DIN 885A	DIN 1838	DIN 1837	DORMER	DORMER	DORMER	DORMER	DIN 1880	
									
	D763	**D745**	**D747**	**D752**	**D753**	**D750**	**D751**	**D400**	
	63.00 - 125.00	50.00 - 315.00	32.00 - 315.00	200.00 - 350.00	250.00 - 350.00	200.00 - 350.00	200.00 - 350.00	40.00 - 100.00	
AMG	**484**	**486**	**488**	**491**	**491**	**492**	**492**	**493**	**ISO**
1.1	■45P	■40R	■40R	■40R	■40R	■40R	■40R	■40J	P 1
1.2	■40P	■30R	■30R	■30R	■30R	■30R	■30R	■40J	P 1
1.3	■35P	■30R	■30R	■30R	■30R	■30R	■30R	■30I	P 2
1.4	■30P	■20S	■20S	■20S	■20S	■20S	■20S	■25I	P 3
1.5	■20P							●20H	P 4
1.6	■10P							●15H	H 1
1.7									H 3
1.8									H 4
2.1	■30P	●10S	●10S	●10S	●10S	●10S	●10S	■25H	M 1
2.2	■20P	●10S	●10S	●10S	●10S	●10S	●10S	●15G	M 3
2.3	■10Q							■10G	M 2
2.4									S 2
3.1	■30Q	■40R	■40R	■40R	■40R	■40R	■40R	■20J	K 1
3.2	■25Q	■40R	■40R	■40R	■40R	■40R	■40R	■20J	K 2
3.3	■40Q	■30R	■30R	■30R	■30R	■30R	■30R	■30I	K 3
3.4	■25Q							■20I	K 4
4.1	■30N							■30J	S 1
4.2	■20O							●20I	S 2
4.3	■15O							●10I	S 3
5.1	■40P							■35J	S 1
5.2	■15O							●10I	S 2
5.3	■10M							●5H	S 3
6.1	■150P	■200R	■200R	■200R	■200R	■200R	■200R	■105M	N 3
6.2	■150P	■200T	■200T	■200T	■200T	■200T	■200T	■105K	N 4
6.3	■150P	■200T	■200T	■200T	■200T	■200T	■200T	■35K	N 3
6.4	■15M							●15H	N 4
7.1	■400Q	■600T	■600T	■600T	■600T	■600T	■600T	●260N	N 1
7.2	■400Q	■500T	■500T	■500T	■500T	■500T	■500T	■260N	N 1
7.3	■100Q	■500T	■500T	■500T	■500T	■500T	■500T	■65N	N 1
7.4	■70Q							●45L	N 2
8.1	■150M	■60T	■60T	■60T	■60T	■60T	■60T	●105N	O
8.2								●30N	O
8.3								●5L	O
9.1									H
10.1								●45K	O

DORMER

	HSS-E	HSS-E	HSS-E	
	N	NR	NR	
	Z 8-12	Z 6-10	Z 6-10	
	λ30° γ12°	λ30° γ12°	λ30° γ12°	
	TiCN		TiCN	
	js16	js16	js16	
	DIN 1880	DIN 1880	DIN 1880	
				
	D420	**D402**	**D422**	
	40.00 - 100.00	40.00 - 100.00	40.00 - 100.00	
AMG	**493**	**494**	**494**	**ISO**
1.1	■75J	■40J	■75J	P 1
1.2	■75J	■40J	■75J	P 1
1.3	■65I	■30I	■65I	P 2
1.4	■50I	■25I	■50I	P 3
1.5	■35H	●20H	■35H	P 4
1.6	■30H	●15H	■30H	H 1
1.7				H 3
1.8				H 4
2.1	■35H	■25H	■35H	M 1
2.2	■30G	●15G	■30G	M 3
2.3	■20G	■10G	■20G	M 2
2.4				S 2
3.1	■35J	■20J	■35J	K 1
3.2	■30J	■20J	■30J	K 2
3.3	■50I	■30I	■50I	K 3
3.4	■30I	■20I	■30I	K 4
4.1	■35J	■30J	■35J	S 1
4.2	■25I	●20I	■25I	S 2
4.3	■15I	●10I	■15I	S 3
5.1	■75J	■35J	■75J	S 1
5.2	■20I	●10I	■20I	S 2
5.3	■10H	●5H	■10H	S 3
6.1	■150M	■105M	■150M	N 3
6.2	■150K	■105K	■150K	N 4
6.3	■50K	■35K	■50K	N 3
6.4	■20H	●15H	■20H	N 4
7.1	●260N	●260N	●260N	N 1
7.2	■260N	■260N	■260N	N 1
7.3	■135N	■65N	■135N	N 1
7.4	■75L	●45L	■75L	N 2
8.1	■120N	●105N	■120N	O
8.2	●60N	●30N	●60N	O
8.3	●15L	●5L	●15L	O
9.1				H
10.1	■125K	●45K	■125K	O

HM

Z 1	Z 2	Z 3	Z 4	Z >4		Ae (x Ø)	Ap (x Ø)	ø [mm] fz [mm/Z] ± 25 %													
			●	■		0.05	1.5	Ø	1	2	3	4	5	6	8	10	12	14	16	18	20
								A	0.012	0.024	0.035	0.045	0.055	0.065	0.080	0.093	0.107	0.121	0.134	0.149	0.162
								B	0.016	0.032	0.047	0.061	0.074	0.087	0.107	0.124	0.143	0.162	0.179	0.198	0.216
								C	0.020	0.040	0.058	0.076	0.092	0.108	0.134	0.156	0.179	0.202	0.224	0.248	0.271
								D	0.024	0.048	0.070	0.091	0.111	0.130	0.160	0.187	0.214	0.242	0.268	0.297	0.325
								E	0.028	0.056	0.081	0.106	0.129	0.152	0.187	0.218	0.250	0.283	0.313	0.347	0.379
								F	0.032	0.064	0.093	0.121	0.148	0.173	0.214	0.249	0.286	0.323	0.358	0.396	0.433
								G	0.037	0.071	0.105	0.136	0.166	0.195	0.240	0.280	0.321	0.364	0.403	0.446	0.487
								H	0.041	0.079	0.116	0.152	0.185	0.216	0.267	0.311	0.357	0.404	0.447	0.495	0.541
		●	■	■		0.08	1.5	A	0.010	0.019	0.028	0.036	0.044	0.052	0.064	0.074	0.085	0.096	0.107	0.118	0.129
								B	0.013	0.025	0.037	0.048	0.059	0.069	0.085	0.099	0.114	0.128	0.142	0.157	0.172
								C	0.016	0.032	0.046	0.060	0.073	0.086	0.106	0.124	0.142	0.161	0.178	0.197	0.215
								D	0.019	0.038	0.055	0.072	0.088	0.103	0.127	0.148	0.170	0.193	0.213	0.236	0.258
								E	0.023	0.044	0.065	0.084	0.103	0.120	0.149	0.173	0.199	0.225	0.249	0.276	0.301
								F	0.026	0.050	0.074	0.096	0.118	0.138	0.170	0.198	0.227	0.257	0.284	0.315	0.344
								G	0.029	0.057	0.083	0.108	0.132	0.155	0.191	0.223	0.256	0.289	0.320	0.354	0.387
								H	0.032	0.063	0.092	0.120	0.147	0.172	0.212	0.247	0.284	0.321	0.356	0.394	0.430
		■	■	●		0.15	1.5	A	0.007	0.014	0.021	0.027	0.033	0.038	0.047	0.055	0.063	0.071	0.079	0.087	0.095
								B	0.010	0.019	0.027	0.036	0.043	0.051	0.063	0.073	0.084	0.095	0.105	0.116	0.127
								C	0.012	0.023	0.034	0.045	0.054	0.064	0.078	0.091	0.105	0.119	0.132	0.146	0.159
								D	0.014	0.028	0.041	0.053	0.065	0.076	0.094	0.110	0.126	0.143	0.158	0.175	0.191
								E	0.017	0.033	0.048	0.062	0.076	0.089	0.110	0.128	0.147	0.166	0.184	0.204	0.223
								F	0.019	0.037	0.055	0.071	0.087	0.102	0.126	0.146	0.168	0.190	0.210	0.233	0.255
								G	0.021	0.042	0.062	0.080	0.098	0.115	0.141	0.165	0.189	0.214	0.237	0.262	0.286
								H	0.024	0.047	0.068	0.089	0.109	0.127	0.157	0.183	0.210	0.238	0.263	0.291	0.318
		■	■			0.30	1.5	A	0.005	0.010	0.015	0.019	0.024	0.028	0.034	0.040	0.046	0.052	0.058	0.064	0.070
								B	0.007	0.014	0.020	0.026	0.032	0.037	0.046	0.053	0.061	0.069	0.077	0.085	0.093
								C	0.009	0.017	0.025	0.032	0.040	0.046	0.057	0.067	0.077	0.087	0.096	0.106	0.116
								D	0.010	0.020	0.030	0.039	0.048	0.056	0.069	0.080	0.092	0.104	0.115	0.127	0.139
								E	0.012	0.024	0.035	0.045	0.055	0.065	0.080	0.093	0.107	0.121	0.134	0.149	0.162
								F	0.014	0.027	0.040	0.052	0.063	0.074	0.092	0.107	0.122	0.138	0.153	0.170	0.185
								G	0.016	0.031	0.045	0.058	0.071	0.083	0.103	0.120	0.138	0.156	0.173	0.191	0.209
								H	0.017	0.034	0.050	0.065	0.079	0.093	0.114	0.133	0.153	0.173	0.192	0.212	0.232
		●	■			0.60	1.5	A	0.004	0.008	0.011	0.015	0.018	0.021	0.026	0.031	0.035	0.040	0.044	0.049	0.053
								B	0.005	0.010	0.015	0.020	0.024	0.028	0.035	0.041	0.047	0.053	0.059	0.065	0.071
								C	0.007	0.013	0.019	0.025	0.030	0.035	0.044	0.051	0.058	0.066	0.073	0.081	0.089
								D	0.008	0.016	0.023	0.030	0.036	0.043	0.052	0.061	0.070	0.079	0.088	0.097	0.106
								E	0.009	0.018	0.027	0.035	0.042	0.050	0.061	0.071	0.082	0.093	0.103	0.114	0.124
								F	0.011	0.021	0.030	0.040	0.048	0.057	0.070	0.082	0.094	0.106	0.117	0.130	0.142
								G	0.012	0.023	0.034	0.045	0.054	0.064	0.079	0.092	0.105	0.119	0.132	0.146	0.159
								H	0.013	0.026	0.038	0.050	0.061	0.071	0.087	0.102	0.117	0.132	0.146	0.162	0.177

■ 优异
Excelente
Excelente
Excellent

● 良好
Bom
Bueno
Good

DORMER

HM

Z 1	Z 2	Z 3	Z 4	Z >4		Ae (x Ø)	Ap (x Ø)	ø [mm] fz [mm/Z] ± 25 %	Ø 1	2	3	4	5	6	8	10	12	14	16	18	20
■	■	■			Ap / Ae	1.0	0.5	A	0.003	0.006	0.009	0.012	0.014	0.017	0.021	0.024	0.028	0.032	0.035	0.039	0.042
								B	0.004	0.008	0.012	0.016	0.019	0.023	0.028	0.033	0.037	0.042	0.047	0.052	0.057
								C	0.005	0.010	0.015	0.020	0.024	0.028	0.035	0.041	0.047	0.053	0.058	0.065	0.071
								D	0.006	0.012	0.018	0.024	0.029	0.034	0.042	0.049	0.056	0.063	0.070	0.078	0.085
								E	0.007	0.015	0.021	0.028	0.034	0.040	0.049	0.057	0.065	0.074	0.082	0.091	0.099
								F	0.008	0.017	0.024	0.032	0.039	0.045	0.056	0.065	0.075	0.084	0.093	0.103	0.113
								G	0.010	0.019	0.027	0.036	0.043	0.051	0.063	0.073	0.084	0.095	0.105	0.116	0.127
								H	0.011	0.021	0.030	0.040	0.048	0.057	0.070	0.081	0.093	0.106	0.117	0.129	0.141
■	■	■			Ap / Ae	1.0	1.0	A	0.003	0.005	0.007	0.010	0.012	0.014	0.017	0.020	0.022	0.025	0.028	0.031	0.034
								B	0.003	0.007	0.010	0.013	0.015	0.018	0.022	0.026	0.030	0.034	0.037	0.041	0.045
								C	0.004	0.008	0.012	0.016	0.019	0.023	0.028	0.033	0.037	0.042	0.047	0.052	0.057
								D	0.005	0.010	0.015	0.019	0.023	0.027	0.033	0.039	0.045	0.051	0.056	0.062	0.068
								E	0.006	0.012	0.017	0.022	0.027	0.032	0.039	0.046	0.052	0.059	0.065	0.072	0.079
								F	0.007	0.013	0.019	0.025	0.031	0.036	0.045	0.052	0.060	0.068	0.075	0.083	0.090
								G	0.008	0.015	0.022	0.029	0.035	0.041	0.050	0.059	0.067	0.076	0.084	0.093	0.102
								H	0.008	0.017	0.024	0.032	0.039	0.045	0.056	0.065	0.075	0.084	0.093	0.103	0.113
	■		■		Ap / Ae	0.10	0.05	A	0.004	0.008	0.012	0.016	0.020	0.023	0.029	0.033	0.038	0.043	0.048	0.053	0.058
								B	0.006	0.011	0.017	0.022	0.026	0.031	0.038	0.044	0.051	0.058	0.064	0.071	0.077
								C	0.007	0.014	0.021	0.027	0.033	0.039	0.048	0.056	0.064	0.072	0.080	0.088	0.097
								D	0.009	0.017	0.025	0.032	0.040	0.046	0.057	0.067	0.076	0.086	0.096	0.106	0.116
								E	0.010	0.020	0.029	0.038	0.046	0.054	0.067	0.078	0.089	0.101	0.112	0.124	0.135
								F	0.012	0.023	0.033	0.043	0.053	0.062	0.076	0.089	0.102	0.115	0.128	0.141	0.154
								G	0.013	0.025	0.037	0.049	0.059	0.069	0.086	0.100	0.115	0.130	0.144	0.159	0.174
								H	0.014	0.028	0.042	0.054	0.066	0.077	0.095	0.111	0.127	0.144	0.160	0.177	0.193

■ 优异
Excelente
Excelente
Excellent

● 良好
Bom
Bueno
Good

DORMER

HSS | HSS-E | HSS-E PM

Z 2	Z 3	Z 4	Z >4	Ø	Ae (x Ø)	Ap (x Ø)		Ø [mm] fz [mm/Z] ± 25 %																					
							Ø	1	2	3	4	5	6	8	10	12	14	16	18	20	22	25	28	30	32	36	40	50
■	●			Ap Ae	1.0	0.2 - 0.5	A	0.004	0.008	0.013	0.017	0.024	0.029	0.043	0.060	0.072	0.084	0.096	0.097	0.096	0.099	0.105	0.109	0.108	0.106	0.108	0.108	0.105
							B	0.004	0.007	0.012	0.015	0.022	0.026	0.039	0.054	0.065	0.076	0.086	0.087	0.086	0.089	0.095	0.098	0.097	0.095	0.097	0.097	0.095
							C	0.003	0.006	0.011	0.014	0.019	0.023	0.035	0.049	0.058	0.068	0.078	0.079	0.078	0.080	0.085	0.088	0.087	0.086	0.087	0.087	0.085
							D	0.004	0.007	0.011	0.014	0.020	0.024	0.037	0.051	0.061	0.071	0.081	0.082	0.081	0.084	0.089	0.099	0.091	0.097	0.091	0.101	0.101
							E	0.007	0.012	0.018	0.024	0.035	0.042	0.063	0.087	0.105	0.122	0.140	0.141	0.140	0.144	0.153	0.171	0.157	0.168	0.157	0.175	0.175
							F	0.007	0.009	0.013	0.018	0.021	0.025	0.033	0.041	0.050	0.055	0.064	0.072	0.079	0.079	0.085	0.085	0.085	0.085	0.085	0.085	0.085
	■	■	■		0.05 - 0.15	1.0 - 2.0	G						0.026	0.034	0.036	0.043	0.050	0.057	0.064	0.071	0.071	0.054	0.053	0.054	0.053	0.056	0.057	0.060
							H						0.023	0.031	0.032	0.039	0.045	0.051	0.058	0.064	0.064	0.049	0.048	0.049	0.048	0.050	0.051	0.054
							I						0.021	0.028	0.029	0.035	0.041	0.046	0.052	0.058	0.058	0.044	0.043	0.044	0.043	0.045	0.046	0.049
							J						0.024	0.031	0.033	0.039	0.046	0.052	0.059	0.065	0.065	0.049	0.049	0.049	0.049	0.051	0.052	0.055
							K						0.035	0.047	0.065	0.079	0.092	0.105	0.088	0.098	0.097	0.110	0.110	0.110	0.110	0.115	0.118	0.123
							L						0.010	0.013	0.017	0.020	0.025	0.028	0.030	0.032	0.033	0.034	0.036	0.038	0.039	0.040	0.042	0.042
	■	■	●		0.15 - 0.30	1.0 - 1.5	M		0.008	0.012	0.018	0.023	0.031	0.041	0.057	0.069	0.080	0.091	0.103	0.114	0.090	0.103	0.085	0.091	0.097	0.110	0.107	0.086
							N		0.007	0.011	0.016	0.021	0.028	0.037	0.051	0.062	0.072	0.082	0.093	0.103	0.081	0.093	0.077	0.082	0.087	0.099	0.096	0.077
							O		0.006	0.010	0.015	0.019	0.025	0.033	0.046	0.056	0.065	0.074	0.083	0.092	0.073	0.083	0.069	0.074	0.079	0.089	0.087	0.070
							P		0.007	0.010	0.016	0.020	0.027	0.035	0.049	0.059	0.069	0.079	0.088	0.098	0.078	0.088	0.073	0.079	0.084	0.094	0.092	0.074
							Q		0.009	0.014	0.021	0.026	0.036	0.048	0.066	0.079	0.092	0.106	0.089	0.099	0.098	0.111	0.111	0.119	0.127	0.143	0.139	0.148
							R		0.012	0.016	0.020	0.025	0.029	0.038	0.047	0.056	0.065	0.073	0.083	0.092	0.092	0.092	0.092	0.092	0.104	0.104	0.108	0.108
		■			0.3 - 0.8	0.5 - 1.5	S		0.010	0.015	0.023	0.029	0.039	0.051	0.071	0.086	0.100	0.114	0.129	0.143	0.113	0.129	0.107	0.114	0.122	0.137	0.133	0.107
							T		0.009	0.014	0.021	0.026	0.035	0.046	0.064	0.077	0.090	0.103	0.116	0.129	0.102	0.116	0.096	0.103	0.110	0.123	0.120	0.096
							U		0.008	0.012	0.019	0.023	0.032	0.041	0.058	0.070	0.081	0.092	0.104	0.116	0.092	0.104	0.087	0.092	0.099	0.111	0.108	0.087
							V		0.009	0.013	0.020	0.025	0.033	0.044	0.061	0.074	0.086	0.098	0.110	0.123	0.097	0.110	0.092	0.098	0.105	0.118	0.115	0.092
							X		0.012	0.017	0.026	0.033	0.045	0.059	0.082	0.099	0.115	0.132	0.111	0.124	0.122	0.139	0.139	0.148	0.158	0.178	0.173	0.186
							Y		0.015	0.020	0.025	0.031	0.036	0.047	0.059	0.070	0.081	0.092	0.104	0.115	0.115	0.115	0.115	0.115	0.130	0.130	0.136	0.136

■ 优异
Excelente
Excelente
Excellent

● 良好
Bom
Bueno
Good

DORMER

HSS | HSS-E | HSS-E PM

Ø		Ø [mm] fz [mm/Z] ± 25 %															
	Ø	10	12	16	20	25	32	38	50	63	80	100	125	160	200	300	350
C800 C801 C810 C820 C822 C825 	M		0.017	0.022	0.036	0.038	0.041	0.044	0.045	0.047							
	N		0.022	0.027	0.045	0.046	0.052	0.058	0.06	0.062							
	O		0.025	0.03	0.052	0.055	0.056	0.058	0.06	0.062							
	P		0.030	0.043	0.063	0.064	0.062	0.068	0.07	0.072							
	Q		0.045	0.048	0.063	0.064	0.066	0.068	0.07	0.072							
	R		0.055	0.07	0.115	0.119	0.123	0.126	0.128	0.13							

	Ø	10	12	16	20	25	32	38	50	63	80	100	125	160	200	300	350
C830 C835 C837 C831 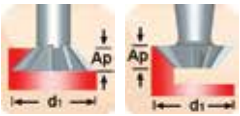	M		0.036	0.045	0.057	0.064	0.074	0.084									
	N		0.048	0.058	0.073	0.084	0.095	0.105									
	O		0.052	0.063	0.081	0.092	0.103	0.114									
	P		0.059	0.071	0.089	0.1	0.112	0.125									
	Q		0.072	0.088	0.106	0.12	0.133	0.147									
	R		0.079	0.095	0.114	0.13	0.143	0.157									

	Ø	10	12	16	20	25	32	38	50	63	80	100	125	160	200	300	350
C700 C710 	M	0.03	0.03	0.03	0.04	0.05	0.05										
	N	0.04	0.04	0.04	0.05	0.06	0.07										
	O	0.04	0.04	0.05	0.06	0.07	0.08										
	P	0.04	0.04	0.05	0.07	0.08	0.08										
	Q	0.05	0.05	0.07	0.08	0.09	0.10										
	R	0.06	0.06	0.07	0.09	0.10	0.11										

	Ø	10	12	16	20	25	32	38	50	63	80	100	125	160	200	300	350
D745 D747 D750 D751 D752 D753 																	
	R						0.040		0.040	0.040	0.040	0.040	0.040	0.040	0.040	0.040	0.040
	S						0.020		0.020	0.020	0.020	0.020	0.020	0.020	0.020	0.020	0.020
	T						0.060		0.060	0.060	0.060	0.060	0.060	0.060	0.060	0.060	0.060

	Ø	10	12	16	20	25	32	38	50	63	80	100	125	160	200	300	350
D200 D763  Ap= 0.1 X Ø	M								0.040	0.050	0.060	0.070	0.080	0.090	0.100		
	N								0.060	0.070	0.080	0.090	0.100	0.105	0.115		
	O								0.070	0.080	0.090	0.100	0.105	0.110	0.120		
	P								0.080	0.090	0.095	0.110	0.115	0.115	0.125		
	Q								0.090	0.100	0.105	0.110	0.115	0.125	0.135		

	Ø	40	50	60	80	100	125
D402 D422 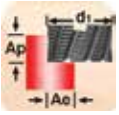 Ae= 0.75 x Ø Ap= 0.25 x Ø	G	0.042	0.049	0.040	0.047	0.040	0.037
	H	0.050	0.059	0.047	0.055	0.048	0.044
	I	0.062	0.071	0.058	0.066	0.058	0.054
	J	0.082	0.095	0.078	0.090	0.078	0.073
	K	0.118	0.140	0.110	0.130	0.110	0.103
	L	0.145	0.171	0.136	0.160	0.136	0.127
	M	0.185	0.160	0.170	0.200	0.170	0.160
	N	0.270	0.320	0.250	0.290	0.250	0.230

	Ø	40	50	60	80	100
D400 D420 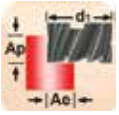 Ae= 0.75 x Ø Ap= 0.1 x Ø	G	0.042	0.049	0.040	0.047	0.040
	H	0.050	0.059	0.047	0.055	0.048
	I	0.062	0.071	0.058	0.066	0.058
	J	0.082	0.095	0.078	0.090	0.078
	K	0.118	0.140	0.110	0.130	0.110
	L	0.145	0.171	0.136	0.160	0.136
	M	0.185	0.160	0.170	0.200	0.170
	N	0.270	0.320	0.250	0.290	0.250

D750
D751
D752
D753

齿数的选择
Tabela de Passo por Facas
Tabla de Paso por Dientes
Tooth Pitch Choice

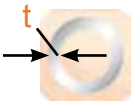

t (mm)

Ø (mm)

	<1.0 mm	1.0 - 1.5 mm	1.5 - 2.0 mm	2.0 - 3.0 mm	3.0 - 4.0 mm	>4.0 mm	10 - 20 mm	20 - 40 mm	40 - 60 mm	
1.1	3	4	5	5	6	7	5	8		P 1
1.2	3	4	4	5	6	7	5	6		P 1
1.3	3	4	4	5	6	7	5	6		P 2
1.4	3	4	4	5	6	7	5	6		P 3
1.5	3	3	4	5	5	6	5	6	8	P 4
1.6										H 1
1.7										H 3
1.8										H 4
2.1	3	4	5	5	6	6	5	6	8	M 1
2.2	3	4	5	5	6	6	5	6	8	M 3
2.3	3	4	5	5	6	6	5	6	8	M 2
2.4	3	4	5	5	6	6	5	6	8	S 2
3.1							6	8		K 1
3.2							6	8		K 2
3.3							6	8		K 3
3.4							6	8		K 4
4.1										S 1
4.2										S 2
4.3										S 3
5.1										S 1
5.2										S 2
5.3										S 3
6.1	4	5	6	7	8	8	6	8		N 3
6.2	4	5	6	7	8	8	8			N 4
6.3	4	5	6	7	8	8	8			N 3
6.4	4	5	6	7	8		6	8		N 4
7.1	4	5	6	7	8	8	6	8		N 1
7.2	4	5	6	7	8	8	6	8		N 1
7.3	4	5	6	7	8	8	6	8		N 1
7.4	4	5	6	7	8	8	6	8		N 2
8.1										O
8.2										O
8.3										O
9.1										H
10.1										O

管件
Tubo oco
Tubo hueco
Hollow tube

实体材料
Barra maciça
Sección maciza
Solid section

S802HA
S802HB

- 钻铣刀
- Fresa de topo para canais
- Fresas de ranurar
- Slot Drill

S802HA; S802HB		
	■	1.1 1.2 1.3 1.4 1.5 1.6 2.1 2.2 3.1 3.2 3.3 3.4 6.2 6.3 6.4 7.2 7.3 7.4
	●	2.3 2.4 4.1 4.2 5.1 5.2 6.1 7.1 8.1 8.2

S802HA	HM	P9	N	Z 2		λ 28° γ 9°	DIN 6535HA	Alcrona			DIN 6527K
S802HB	HM	P9	N	Z 2		λ 28° γ 9°	DIN 6535HB	Alcrona			DIN 6527K

S802HA	S802HB
	
1.00 - 20.00	1.80 - 20.00

d_1 Ø mm	Ch ±0.03x45° mm	d_2 Øh_6 mm	l_2 mm	l_1 mm	z	S802HA	S802HB
1.00	-	3	3	38	2	S802HA1.0	
1.50	-	3	3	38	2	S802HA1.5	
1.80	-	6	3	50	2	S802HA1.8	S802HB1.8
2.00	-	6	3	50	2	S802HA2.0	S802HB2.0
2.50	0.08	6	3	50	2	S802HA2.5	S802HB2.5
2.80	0.08	6	4	50	2	S802HA2.8	S802HB2.8
3.00	0.08	6	4	50	2	S802HA3.0	S802HB3.0
3.50	0.08	6	4	50	2	S802HA3.5	S802HB3.5
3.80	0.08	6	5	54	2	S802HA3.8	S802HB3.8
4.00	0.13	6	5	54	2	S802HA4.0	S802HB4.0
4.50	0.13	6	5	54	2	S802HA4.5	S802HB4.5
4.80	0.13	6	6	54	2	S802HA4.8	S802HB4.8
5.00	0.13	6	6	54	2	S802HA5.0	S802HB5.0
5.75	0.13	6	7	54	2	S802HA5.75	S802HB5.75
6.00	0.13	6	7	54	2	S802HA6.0	S802HB6.0
6.75	0.13	8	8	58	2	S802HA6.75	S802HB6.75
7.00	0.13	8	8	58	2	S802HA7.0	S802HB7.0
7.75	0.13	8	9	58	2	S802HA7.75	S802HB7.75
8.00	0.20	8	9	58	2	S802HA8.0 [1]	S802HB8.0 [1]
9.00	0.20	10	10	66	2	S802HA9.0 [1]	S802HB9.0 [1]
9.70	0.20	10	11	66	2	S802HA9.7 [1]	S802HB9.7 [1]
10.00	0.20	10	11	66	2	S802HA10.0 [1]	S802HB10.0 [1]
11.70	0.20	12	12	73	2	S802HA11.7 [1]	S802HB11.7 [1]
12.00	0.20	12	12	73	2	S802HA12.0 [1]	S802HB12.0 [1]
13.70	0.20	14	14	75	2	S802HA13.7 [1]	S802HB13.7 [1]
14.00	0.20	14	14	75	2	S802HA14.0 [1]	S802HB14.0 [1]
15.70	0.20	16	16	82	2	S802HA15.7 [1]	S802HB15.7 [1]
16.00	0.20	16	16	82	2	S802HA16.0 [1]	S802HB16.0 [1]
17.70	0.20	18	18	84	2	S802HA17.7 [1]	S802HB17.7 [1]
18.00	0.20	18	18	84	2	S802HA18.0 [1]	S802HB18.0 [1]
19.70	0.30	20	20	92	2	S802HA19.7 [1]	S802HB19.7 [1]
20.00	0.30	20	20	92	2	S802HA20.0 [1]	S802HB20.0 [1]

[1] Ch ± 0.05x45° mm

S812HA
S812HB

- 钻铣刀
- Fresa de topo para canais
- Fresas de ranurar
- Slot Drill

S812HA; S812HB ▪ 1.1 1.2 1.3 1.4 1.5 1.6 2.1 2.2 2.3 3.1 3.2 3.3 3.4 4.1 4.2 5.1 5.2 6.1 6.2 6.3 6.4 7.1 7.2 7.3 7.4 8.1 8.2

S812HA	HM	P9	N	Z 2		λ 28° γ 9°	DIN 6535HA	Alcrona				DIN 6527L
S812HB	HM	P9	N	Z 2		λ 28° γ 9°	DIN 6535HB	Alcrona				DIN 6527L

S812HA	S812HB
	
2.00 - 20.00	2.00 - 20.00

d_1 Ø mm	Ch ±0.03x45° mm	d_2 Øh_6 mm	l_2 mm	l_1 mm	z	S812HA	S812HB
2.00	-	6	6	57	2	S812HA2.0	S812HB2.0
2.50	0.08	6	7	57	2	S812HA2.5	S812HB2.5
3.00	0.08	6	7	57	2	S812HA3.0	S812HB3.0
3.50	0.08	6	7	57	2	S812HA3.5	S812HB3.5
4.00	0.13	6	8	57	2	S812HA4.0	S812HB4.0
4.50	0.13	6	8	57	2	S812HA4.5	S812HB4.5
5.00	0.13	6	10	57	2	S812HA5.0	S812HB5.0
6.00	0.13	6	10	57	2	S812HA6.0	S812HB6.0
7.00	0.13	8	13	63	2	S812HA7.0	S812HB7.0
8.00	0.20	8	16	63	2	S812HA8.0 [1]	S812HB8.0 [1]
9.00	0.20	10	16	72	2	S812HA9.0 [1]	S812HB9.0 [1]
10.00	0.20	10	19	72	2	S812HA10.0 [1]	S812HB10.0 [1]
12.00	0.20	12	22	83	2	S812HA12.0 [1]	S812HB12.0 [1]
14.00	0.20	14	22	83	2	S812HA14.0 [1]	S812HB14.0 [1]
16.00	0.20	16	26	92	2	S812HA16.0 [1]	S812HB16.0 [1]
18.00	0.20	18	26	92	2	S812HA18.0 [1]	S812HB18.0 [1]
20.00	0.30	20	32	104	2	S812HA20.0 [1]	S812HB20.0 [1]

[1] Ch ± 0.05x45° mm

S822

- 钻铣刀
- Fresa de topo para canais
- Fresas de ranurar
- Slot Drill

S822 ▪ 1.1 1.2 1.3 1.4 1.5 1.6 2.1 2.2 2.3 3.1 3.2 3.3 3.4 4.1 4.2 5.1 5.2 6.1 6.2 6.3 6.4 7.1 7.2 7.3 7.4 8.1 8.2

S822 HM | P9 | N | Z 2 | λ 28° γ 9° | DIN 6535HA | Alcrona | DORMER

S822

2.00 - 20.00

d_1 Ø mm	Ch ±0.03x45° mm	d_2 Øh_6 mm	l_2 mm	l_1 mm	z	S822
2.00	-	6	8	57	2	S8222.0
2.50	0.08	6	12	57	2	S8222.5
3.00	0.08	6	12	57	2	S8223.0
4.00	0.13	6	14	57	2	S8224.0
5.00	0.13	6	16	57	2	S8225.0
6.00	0.13	6	19	57	2	S8226.0
7.00	0.13	8	19	63	2	S8227.0
8.00	0.20	8	19	63	2	S8228.0 [1]
9.00	0.20	10	21	72	2	S8229.0 [1]
10.00	0.20	10	22	72	2	S82210.0 [1]
12.00	0.20	12	25	83	2	S82212.0 [1]
14.00	0.20	14	30	83	2	S82214.0 [1]
16.00	0.20	16	32	92	2	S82216.0 [1]
18.00	0.20	18	32	92	2	S82218.0 [1]
20.00	0.30	20	38	104	2	S82220.0 [1]

[1] Ch ± 0.05x45° mm

S803HA
S803HB

- 钻铣刀
- Fresa de topo para canais
- Fresas de ranurar
- Slot Drill

S803HA; S803HB																		
▪	1.1	1.2	1.3	1.4	1.5	1.6	2.1	2.2	3.1	3.2	3.3	3.4	6.2	6.3	6.4	7.2	7.3	7.4
•	2.3	2.4	4.1	4.2	5.1	5.2	6.1	7.1	8.1	8.2								

S803HA	HM	P9	N	Z 3		λ 28° γ 9°	DIN 6535HA	Alcrona				DIN 6527K
S803HB	HM	P9	N	Z 3		λ 28° γ 9°	DIN 6535HB	Alcrona				DIN 6527K

S803HA	S803HB
	
1.00 - 20.00	1.80 - 20.00

d_1 Ø mm	Ch ±0.03x45° mm	d_2 Øh_6 mm	l_2 mm	l_1 mm	z	S803HA	S803HB
1.00	-	3	3	38	3	S803HA1.0	
1.50	-	3	3	38	3	S803HA1.5	
1.80	-	6	3	50	3	S803HA1.8	S803HB1.8
2.00	-	6	3	50	3	S803HA2.0	S803HB2.0
2.50	0.08	6	3	50	3	S803HA2.5	S803HB2.5
2.80	0.08	6	4	50	3	S803HA2.8	S803HB2.8
3.00	0.08	6	4	50	3	S803HA3.0	S803HB3.0
3.50	0.08	6	4	50	3	S803HA3.5	S803HB3.5
3.80	0.08	6	5	54	3	S803HA3.8	S803HB3.8
4.00	0.13	6	5	54	3	S803HA4.0	S803HB4.0
4.50	0.13	6	5	54	3	S803HA4.5	S803HB4.5
4.80	0.13	6	6	54	3	S803HA4.8	S803HB4.8
5.00	0.13	6	6	54	3	S803HA5.0	S803HB5.0
5.75	0.13	6	7	54	3	S803HA5.75	S803HB5.75
6.00	0.13	6	7	54	3	S803HA6.0	S803HB6.0
6.75	0.13	8	8	58	3	S803HA6.75	S803HB6.75
7.00	0.13	8	8	58	3	S803HA7.0	S803HB7.0
7.75	0.13	8	9	58	3	S803HA7.75	S803HB7.75
8.00	0.20	8	9	58	3	S803HA8.0 [1]	S803HB8.0 [1]
9.00	0.20	10	10	66	3	S803HA9.0 [1]	S803HB9.0 [1]
9.70	0.20	10	11	66	3	S803HA9.7 [1]	S803HB9.7 [1]
10.00	0.20	10	11	66	3	S803HA10.0 [1]	S803HB10.0 [1]
11.70	0.20	12	12	73	3	S803HA11.7 [1]	S803HB11.7 [1]
12.00	0.20	12	12	73	3	S803HA12.0 [1]	S803HB12.0 [1]
13.70	0.20	14	14	75	3	S803HA13.7 [1]	S803HB13.7 [1]
14.00	0.20	14	14	75	3	S803HA14.0 [1]	S803HB14.0 [1]
15.70	0.20	16	16	82	3	S803HA15.7 [1]	S803HB15.7 [1]
16.00	0.20	16	16	82	3	S803HA16.0 [1]	S803HB16.0 [1]
17.70	0.20	18	18	84	3	S803HA17.7 [1]	S803HB17.7 [1]
18.00	0.20	18	18	84	3	S803HA18.0 [1]	S803HB18.0 [1]
19.70	0.30	20	20	92	3	S803HA19.7 [1]	S803HB19.7 [1]
20.00	0.30	20	20	92	3	S803HA20.0 [1]	S803HB20.0 [1]

[1] Ch ± 0.05x45° mm

S813HA
S813HB

- 钻铣刀
- Fresa de topo para canais
- Fresas de ranurar
- Slot Drill

S813HA; S813HB																
▪	1.1	1.2	1.3	1.4	1.5	2.1	3.1	3.2	3.3	3.4	6.2	6.3	6.4	7.2	7.3	7.4
•	1.6	2.2	2.3	4.1	4.2	5.1	5.2	6.1	7.1	8.1	8.2					

S813HA	HM	P9	N	Z 3		λ 28° γ 9°	DIN 6535HA	Alcrona			DIN 6527L
S813HB	HM	P9	N	Z 3		λ 28° γ 9°	DIN 6535HB	Alcrona			DIN 6527L

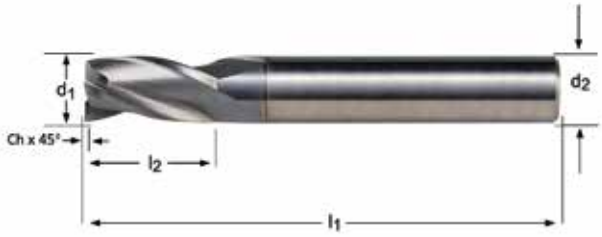

S813HA	S813HB
	
2.00 - 20.00	2.00 - 20.00

d_1 Ø mm	Ch ±0.03x45° mm	d_2 Øh_6 mm	l_2 mm	l_1 mm	z	S813HA	S813HB
2.00	0.00	6	6	57	3	S813HA2.0	S813HB2.0
2.50	0.08	6	7	57	3	S813HA2.5	S813HB2.5
3.00	0.08	6	7	57	3	S813HA3.0	S813HB3.0
3.50	0.08	6	7	57	3	S813HA3.5	S813HB3.5
4.00	0.13	6	8	57	3	S813HA4.0	S813HB4.0
4.50	0.13	6	8	57	3	S813HA4.5	S813HB4.5
5.00	0.13	6	10	57	3	S813HA5.0	S813HB5.0
6.00	0.13	6	10	57	3	S813HA6.0	S813HB6.0
7.00	0.13	8	13	63	3	S813HA7.0	S813HB7.0
8.00	0.20	8	16	63	3	S813HA8.0 [1]	S813HB8.0 [1]
9.00	0.20	10	16	72	3	S813HA9.0 [1]	S813HB9.0 [1]
10.00	0.20	10	19	72	3	S813HA10.0 [1]	S813HB10.0 [1]
12.00	0.20	12	22	83	3	S813HA12.0 [1]	S813HB12.0 [1]
14.00	0.20	14	22	83	3	S813HA14.0 [1]	S813HB14.0 [1]
16.00	0.20	16	26	92	3	S813HA16.0 [1]	S813HB16.0 [1]
18.00	0.20	18	26	92	3	S813HA18.0 [1]	S813HB18.0 [1]
20.00	0.30	20	32	104	3	S813HA20.0 [1]	S813HB20.0 [1]

[1] Ch ± 0.05x45° mm

S823

- 钻铣刀
- Fresa de topo para canais
- Fresas de ranurar
- Slot Drill

S823																
■	1.1	1.2	1.3	1.4	1.5	2.1	3.1	3.2	3.3	3.4	6.2	6.3	6.4	7.2	7.3	7.4
•	1.6	2.2	2.3	4.1	4.2	5.1	5.2	6.1	7.1	8.1	8.2					

S823 HM P9 N Z 3 λ 28° γ 9° DIN 6535HA Alcrona DORMER

S823

2.00 - 20.00

d_1 Ø mm	Ch ±0.03x45° mm	d_2 Øh_6 mm	l_2 mm	l_1 mm	z	S823
2.00	-	6	8	57	3	S8232.0
2.50	0.08	6	12	57	3	S8232.5
3.00	0.08	6	12	57	3	S8233.0
4.00	0.13	6	14	57	3	S8234.0
5.00	0.13	6	16	57	3	S8235.0
6.00	0.13	6	19	57	3	S8236.0
7.00	0.13	8	19	63	3	S8237.0
8.00	0.20	8	19	63	3	S8238.0 [1]
9.00	0.20	10	21	72	3	S8239.0 [1]
10.00	0.20	10	22	72	3	S82310.0 [1]
12.00	0.20	12	25	83	3	S82312.0 [1]
14.00	0.20	14	30	83	3	S82314.0 [1]
16.00	0.20	16	32	92	3	S82316.0 [1]
18.00	0.20	18	32	92	3	S82318.0 [1]
20.00	0.30	20	38	104	3	S82320.0 [1]

[1] Ch ± 0.05x45° mm

S710

- 立铣刀
- Fresa de Topo
- Fresas de acabado
- End Mill

S710 ▪ 1.1 1.2 1.3 1.4 1.5 2.1 2.2 3.1 3.2 3.3 3.4 4.2 5.2

S710 HM | N | Z 2 | λ40° γ10° | DIN 6535HA | AlCrN | h9 | DORMER

S710

1.00 - 20.00

d_1 Ø mm	d_2 Øh_6 mm	l_2 mm	l_1 mm	z	S710
1.00	3	3	50	2	S7101.0
1.50	3	4.5	50	2	S7101.5
2.00	3	6.5	50	2	S7102.0
2.50	3	6.5	50	2	S7102.5
3.00	6	9	50	2	S7103.0
4.00	6	12	50	2	S7104.0
5.00	6	15	50	2	S7105.0
6.00	6	20	60	2	S7106.0
8.00	8	20	64	2	S7108.0
10.00	10	22	75	2	S71010.0
12.00	12	25	75	2	S71012.0
14.00	14	32	90	2	S71014.0
16.00	16	32	90	2	S71016.0
20.00	20	38	100	2	S71020.0

S902
S922

- 立铣刀
- Fresa de Topo
- Fresas de acabado
- End Mill

S902	▪	1.1 1.2 1.3 1.4 3.1 3.3 4.1 5.1 6.1 6.2 6.3
	•	1.5 3.2 3.4 4.2 4.3 6.4 7.1 7.2 7.3 8.1 8.2 8.3
S922	▪	1.1 1.2 1.3 1.4 1.5 3.1 3.2 3.3 3.4 4.1 5.1 6.1 6.2 6.3
	•	1.6 4.2 4.3 6.4 7.1 7.2 7.3 8.1 8.2 8.3

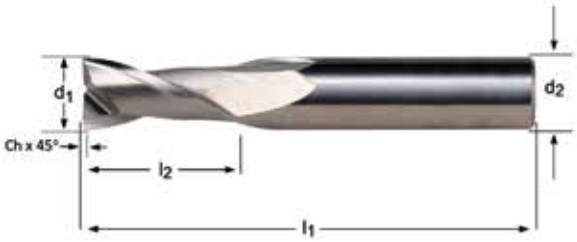

d_1 Ø mm	Ch ±0.03x45° mm	d_2 Øh_6 mm	l_2 mm	l_1 mm	z	S902	S922
2.00	0.08	3	6	38	2	S9022.0	S9222.0 [2]
2.50	0.08	3	9	38	2	S9022.5	S9222.5 [2]
3.00	0.08	3	12	38	2	S9023.0	S9223.0 [2]
4.00	0.08	4	14	50	2	S9024.0	S9224.0 [2]
5.00	0.13	5	16	50	2	S9025.0	S9225.0 [2]
6.00	0.13	6	19	57	2	S9026.0	S9226.0
7.00	0.13	8	19	63	2	S9027.0	S9227.0
8.00	0.13	8	19	63	2	S9028.0	S9228.0
9.00	0.13	10	21	72	2	S9029.0	S9229.0
10.00	0.18	10	22	72	2	S90210.0	S92210.0
12.00	0.20	12	25	73	2	S90212.0 [1]	S92212.0 [1]
14.00	0.20	14	30	83	2	S90214.0 [1]	S92214.0 [1]
16.00	0.20	16	32	92	2	S90216.0 [1]	S92216.0 [1]
18.00	0.20	18	32	92	2	S90218.0 [1]	S92218.0 [1]
20.00	0.30	20	38	104	2	S90220.0 [1]	S92220.0 [1]

[1] Ch ± 0.05x45° mm
[2] 圆柱柄 / Haste cilíndrica / Mango cilíndrico / Cylindrical shank

S713

- 立铣刀
- Fresa de Topo
- Fresas de acabado
- End Mill

S713 ▪ 1.1 1.2 1.3 1.4 1.5 2.1 2.2 3.1 3.2 3.3 3.4 4.2 5.2

S713 HM | N | Z 3 | λ40° γ10° | DIN 6535HA | AlCrN | h9 | DORMER

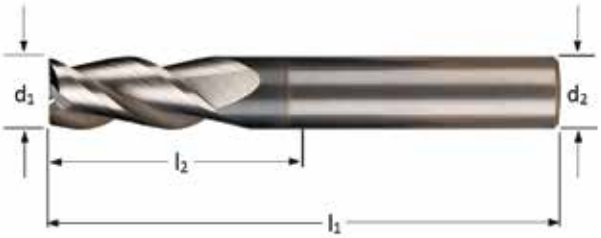

S713

1.50 - 20.00

d_1 Ø mm	d_2 Øh_6 mm	l_2 mm	l_1 mm	z	S713
1.50	4	4.5	40	3	S7131.5
2.00	4	6.5	40	3	S7132.0
3.00	3	9	40	3	S7133.0
4.00	4	12	50	3	S7134.0
5.00	5	15	50	3	S7135.0
6.00	6	16	50	3	S7136.0
8.00	8	20	64	3	S7138.0
10.00	10	22	70	3	S71310.0
12.00	12	25	75	3	S71312.0
14.00	14	32	90	3	S71314.0
16.00	16	32	90	3	S71316.0
18.00	18	38	100	3	S71318.0
20.00	20	38	100	3	S71320.0

S903
S933

- 立铣刀
- Fresa de Topo
- Fresas de acabado
- End Mill

S903	■	1.1 1.2 1.3 1.4 3.1 3.3 4.1 5.1 6.1 6.2 6.3
	●	1.5 3.2 3.4 4.2 4.3 6.4 7.1 7.2 7.3 8.1 8.2 8.3
S933	■	1.1 1.2 1.3 1.4 1.5 3.1 3.2 3.3 3.4 4.1 5.1 6.1 6.2 6.3
	●	1.6 4.2 4.3 6.4 7.1 7.2 7.3 8.1 8.2 8.3

S903	HM		N	Z 3		λ30° γ12°	DIN 6535HA		h10		DORMER	
S933	HM		N	Z 3		λ30° γ12°	DIN 6535HB	TiAlN	h10		DORMER	S991 437

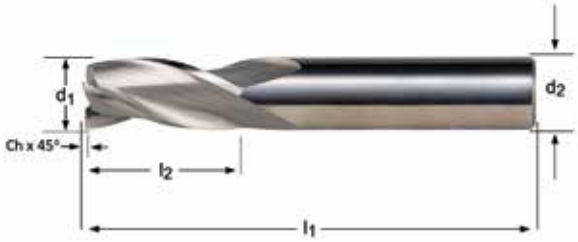

S903	S933
	
2.00 - 20.00	2.00 - 20.00

d_1 Ø mm	Ch ±0.03x45° mm	d_2 Øh_6 mm	l_2 mm	l_1 mm	z	S903	S933
2.00	0.08	3	6	38	3	S9032.0	S9332.0 [2]
2.50	0.08	3	9	38	3	S9032.5	S9332.5 [2]
3.00	0.08	3	12	38	3	S9033.0	S9333.0 [2]
4.00	0.08	4	14	50	3	S9034.0	S9334.0 [2]
5.00	0.13	5	16	50	3	S9035.0	S9335.0 [2]
6.00	0.13	6	19	57	3	S9036.0	S9336.0
7.00	0.13	8	19	63	3	S9037.0	S9337.0
8.00	0.13	8	19	63	3	S9038.0	S9338.0
9.00	0.13	10	21	72	3	S9039.0	S9339.0
10.00	0.20	10	22	72	3	S90310.0 [1]	S93310.0 [1]
12.00	0.20	12	25	73	3	S90312.0 [1]	S93312.0 [1]
14.00	0.20	14	30	83	3	S90314.0 [1]	S93314.0 [1]
16.00	0.20	16	32	92	3	S90316.0 [1]	S93316.0 [1]
18.00	0.20	18	32	92	3	S90318.0 [1]	S93318.0 [1]
20.00	0.30	20	38	104	3	S90320.0 [1]	S93320.0 [1]

[1] Ch ± 0.05x45° mm
[2] 圆柱柄 / Haste cilíndrica / Mango cilíndrico / Cylindrical shank

S714

- 立铣刀
- Fresa de Topo
- Fresas de acabado
- End Mill

S714														
	■	1.1	1.2	1.3	1.4	1.5	2.1	2.2	3.1	3.2	3.3	3.4	4.2	5.2
	•	6.1	6.2	6.3	6.4	7.1	7.2	7.3	7.4					

S714 HM N Z 3 λ40° γ10° DIN 6535HA AlCrN h9

S714

3.00 - 20.00

d_1 Ø mm	d_2 Øh_6 mm	l_2 mm	l_1 mm	z	S714
3.00	3	19	60	3	S7143.0
4.00	4	19	60	3	S7144.0
5.00	5	19	60	3	S7145.0
6.00	6	31	75	3	S7146.0
8.00	8	31	75	3	S7148.0
10.00	10	31	75	3	S71410.0
12.00	12	50	100	3	S71412.0
14.00	14	57	125	3	S71414.0
16.00	16	57	125	3	S71416.0
18.00	18	57	125	3	S71418.0
20.00	20	57	125	3	S71420.0

S715

- 立铣刀
- Fresa de Topo
- Fresas de acabado
- End Mill

S715													
▪	1.1	1.2	1.3	1.4	1.5	2.1	2.2	3.1	3.2	3.3	3.4	4.2	5.2
•	6.1	6.2	6.3	6.4	7.1	7.2	7.3	7.4					

S715 HM N Z 3 λ40° γ10° DIN 6535HA AlCrN h9 DORMER

S715

3.00 - 20.00

d_1 Ø mm	d_2 Øh_6 mm	l_2 mm	l_1 mm	z	S715
3.00	3	25	100	3	S7153.0
4.00	4	31	100	3	S7154.0
5.00	5	31	100	3	S7155.0
6.00	6	38	100	3	S7156.0
8.00	8	41	100	3	S7158.0
10.00	10	57	125	3	S71510.0
12.00	12	75	150	3	S71512.0
14.00	14	75	150	3	S71514.0
16.00	16	75	150	3	S71516.0
18.00	18	75	150	3	S71518.0
20.00	20	75	150	3	S71520.0

S637

- 立铣刀
- Fresa de Topo
- Fresas de acabado
- End Mill

S637 ▪ 6.1 6.2 6.3 6.4 7.1 7.2 7.3 7.4 8.1 8.2

S637 HM | W | Z 1 | λ25° γ20° | DIN 6535HA | Hi | h9 | DORMER

S637

2.00 - 12.00

d_1 Ø mm	d_2 Øh_6 mm	l_2 mm	l_1 mm	z	S637
2.00	2	10	40	1	S6372.0
3.00	3	12	40	1	S6373.0
4.00	4	15	50	1	S6374.0
5.00	5	16	50	1	S6375.0
6.00	6	20	60	1	S6376.0
8.00	8	22	63	1	S6378.0
10.00	10	25	72	1	S63710.0
12.00	12	30	83	1	S63712.0

S638

- 立铣刀
- Fresa de Topo
- Fresas de acabado
- End Mill

缩柄
Haste reduzida
Mango reducido
Reduced shank

S638 ▪ 6.1 6.2 6.3 6.4 7.1 7.2 7.3 7.4 8.1 8.2

S638 HM W Z 2 λ30° γ20° DIN 6535HA Hi h9 DORMER

S638

6.20 - 20.30

d_1 Ø mm	r ±0.02 mm	d_2 Øh_6 mm	l_2 mm	l_1 mm	z	S638
6.20	0.10	6	8	100	2	S6386.2
8.20	0.10	8	10	100	2	S6388.2
10.30	0.10	10	14	125	2	S63810.3
12.30	0.10	12	16	125	2	S63812.3
16.30	0.10	16	20	125	2	S63816.3
20.30	0.10	20	25	125	2	S63820.3

S610

- 立铣刀
- Fresa de Topo
- Fresas de acabado
- End Mill

S610 ▪ 6.1 6.2 6.3 6.4 7.1 7.2 7.3 7.4 8.1 8.2

S610 HM W Z 2 λ30° γ20° DIN 6535HA Hi h9 DORMER

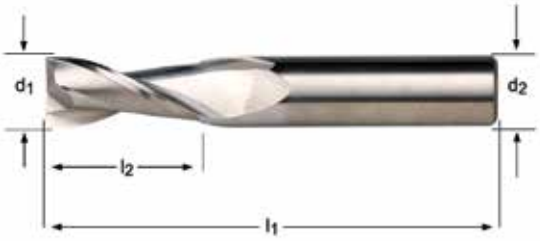

S610

3.00 - 20.00

d_1 Ø mm	r ±0.02 mm	d_2 Øh_6 mm	l_2 mm	l_1 mm	z	S610
3.00	0.10	3	9	40	2	S6103.0XD3
3.00	0.10	6	9	50	2	S6103.0XD6
4.00	0.10	4	12	50	2	S6104.0XD4
4.00	0.10	6	12	50	2	S6104.0XD6
5.00	0.10	6	15	50	2	S6105.0
6.00	0.10	6	20	50	2	S6106.0
8.00	0.10	8	20	64	2	S6108.0
10.00	0.10	10	22	75	2	S61010.0
12.00	0.10	12	25	75	2	S61012.0
14.00	0.10	14	32	90	2	S61014.0
16.00	0.10	16	32	90	2	S61016.0
20.00	0.10	20	38	100	2	S61020.0

S611

- 立铣刀
- Fresa de Topo
- Fresas de acabado
- End Mill

S611 ▪ 6.1 6.2 6.3 6.4 7.1 7.2 7.3 7.4 8.1 8.2

S611 HM | W | Z 2 | λ30° γ20° | DIN 6535HA | Hi | h9 | DORMER

S611

6.00 - 20.00

d_1 Ø mm	r ±0.02 mm	d_2 Øh_6 mm	l_2 mm	l_1 mm	z	l_3 mm	d_3 Ø mm	S611
6.00	0.10	6	16	80	2	40.0	5.5	S6116.0
8.00	0.10	8	20	80	2	40.0	7.4	S6118.0
10.00	0.10	10	22	100	2	60.0	9.2	S61110.0
12.00	0.10	12	25	100	2	60.0	11.0	S61112.0
14.00	0.10	14	32	125	2	75.0	13.0	S61114.0
16.00	0.10	16	32	125	2	75.0	15.0	S61116.0
20.00	0.10	20	38	125	2	75.0	19.0	S61120.0

S804HA
S804HB

- 立铣刀
- Fresa de Topo
- Fresas de acabado
- End Mill

S804HA; S804HB															
▪	1.1	1.2	1.3	1.4	1.5	1.6	2.1	2.2	3.1	3.2	3.3	3.4	6.2	6.3	6.4
•	2.3	2.4	4.1	4.2	5.1	5.2	6.1	7.1	7.2	7.3	7.4	8.1	8.2		

S804HA	HM		N	Z 4		λ 34° γ 9°	DIN 6535HA	Alcrona	h10		DIN 6527K
S804HB	HM		N	Z 4		λ 34° γ 9°	DIN 6535HB	Alcrona	h10		DIN 6527K

S804HA	S804HB
	
2.00 - 25.00	2.00 - 25.00

d_1 Ø mm	Ch ±0.03x45° mm	d_2 Øh_6 mm	l_2 mm	l_1 mm	z	S804HA	S804HB
2.00	-	6	4	50	4	S804HA2.0	S804HB2.0
3.00	0.08	6	5	50	4	S804HA3.0	S804HB3.0
4.00	0.13	6	8	54	4	S804HA4.0	S804HB4.0
5.00	0.13	6	9	54	4	S804HA5.0	S804HB5.0
6.00	0.13	6	10	54	4	S804HA6.0	S804HB6.0
8.00	0.13	8	12	58	4	S804HA8.0	S804HB8.0
10.00	0.20	10	14	66	4	S804HA10.0 [1]	S804HB10.0 [1]
12.00	0.20	12	16	73	4	S804HA12.0 [1]	S804HB12.0 [1]
16.00	0.20	16	22	82	4	S804HA16.0 [1]	S804HB16.0 [1]
20.00	0.30	20	26	92	4	S804HA20.0 [1]	S804HB20.0 [1]
25.00	0.30	25	32	121	4	S804HA25.0 [1]	S804HB25.0 [1]

[1] Ch ± 0.05x45° mm

S219

- 立铣刀
- Fresa de Topo
- Fresas de acabado
- End Mill

S219 ▪ 1.6 2.3 2.4 4.3 5.3

S219 HM | N | Z 4 | λ40° γ3° | DIN 6535HA | AlTiN | h9 | DORMER

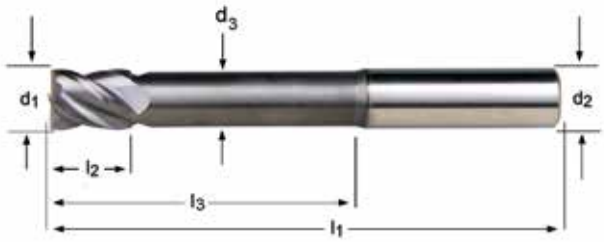

S219

3.00 - 20.00

d_1 Ø mm	d_2 Øh_6 mm	l_2 mm	l_1 mm	z	l_3 mm	d_3 Ø mm	S219
3.00	3	5	60	4	30.0	2.8	S2193.0
4.00	4	8	60	4	32.0	3.7	S2194.0
5.00	5	9	60	4	32.0	4.6	S2195.0
6.00	6	10	75	4	40.0	5.5	S2196.0
8.00	8	12	75	4	40.0	7.4	S2198.0
10.00	10	14	75	4	40.0	9.2	S21910.0
12.00	12	16	100	4	60.0	11.0	S21912.0
14.00	14	22	125	4	85.0	13.0	S21914.0
16.00	16	22	125	4	85.0	15.0	S21916.0
18.00	18	26	125	4	85.0	17.0	S21918.0
20.00	20	26	125	4	85.0	19.0	S21920.0

S814HA
S814HB

- 立铣刀
- Fresa de Topo
- Fresas de acabado
- End Mill

S814HA; S814HB														
	▪	1.1	1.2	1.3	1.4	1.5	2.1	3.1	3.2	3.3	3.4	6.2	6.3	6.4
	•	1.6	2.2	2.3	4.1	4.2	5.1	5.2	6.1	7.1	7.2	7.3	7.4	8.1	8.2

S814HA	HM		N	Z 4		λ 34° γ 9°	DIN 6535HA	Alcrona	h10		DIN 6527L
S814HB	HM		N	Z 4		λ 34° γ 9°	DIN 6535HB	Alcrona	h10		DIN 6527L

S814HA	S814HB
	
2.00 - 25.00	2.00 - 25.00

d_1 Ø mm	Ch ±0.03x45° mm	d_2 Øh_6 mm	l_2 mm	l_1 mm	z	S814HA	S814HB
2.00	0.00	6	7	57	4	S814HA2.0	S814HB2.0
3.00	0.08	6	8	57	4	S814HA3.0	S814HB3.0
4.00	0.13	6	11	57	4	S814HA4.0	S814HB4.0
5.00	0.13	6	13	57	4	S814HA5.0	S814HB5.0
6.00	0.13	6	13	57	4	S814HA6.0	S814HB6.0
8.00	0.13	8	19	63	4	S814HA8.0	S814HB8.0
10.00	0.20	10	22	72	4	S814HA10.0 [1]	S814HB10.0 [1]
12.00	0.20	12	26	83	4	S814HA12.0 [1]	S814HB12.0 [1]
16.00	0.20	16	32	92	4	S814HA16.0 [1]	S814HB16.0 [1]
20.00	0.30	20	38	104	4	S814HA20.0 [1]	S814HB20.0 [1]
25.00	0.30	25	45	121	4	S814HA25.0 [1]	S814HB25.0 [1]

[1] Ch ± 0.05x45° mm

S716

- 立铣刀
- Fresa de Topo
- Fresas de acabado
- End Mill

S716 ▪ 1.1 1.2 1.3 1.4 1.5 2.1 2.2 3.1 3.2 3.3 3.4 4.2 5.2

S716 HM N Z 4 λ40° γ10° DIN 6535HA AlCrN h9

S716

NEW

2.00 - 20.00

d_1 Ø mm	d_2 Øh_6 mm	l_2 mm	l_1 mm	z	S716
2.00	4	6.5	50	4	S7162.0
3.00	3	9	50	4	S7163.0
4.00	4	12	50	4	S7164.0
5.00	5	15	50	4	S7165.0
6.00	6	16	50	4	S7166.0
8.00	8	20	64	4	S7168.0
10.00	10	22	70	4	S71610.0
12.00	12	25	75	4	S71612.0
14.00	14	32	90	4	S71614.0
16.00	16	32	90	4	S71616.0
18.00	18	38	100	4	S71618.0
20.00	20	38	100	4	S71620.0

S612

- 立铣刀
- Fresa de Topo
- Fresas de acabado
- End Mill

S612 ▪ 10.1

S612 HM | N | Z 4 | λ40° γ10° | DIN 6535HA | Diamond | h9 | DORMER

S612

1.00 - 12.00

d_1 Ø mm	d_2 Øh_6 mm	l_2 mm	l_1 mm	z	S612
1.00	3	3	50	4	S6121.0
1.50	3	4.5	50	4	S6121.5
2.00	3	6.5	50	4	S6122.0
2.50	3	6.5	50	4	S6122.5
3.00	3	9	50	4	S6123.0
4.00	4	12	50	4	S6124.0
5.00	5	15	50	4	S6125.0
6.00	6	20	60	4	S6126.0
8.00	8	20	64	4	S6128.0
10.00	10	22	70	4	S61210.0
12.00	12	25	75	4	S61212.0

S216

- 立铣刀
- Fresa de Topo
- Fresas de acabado
- End Mill

S216 ▪ 1.6 2.3 2.4 4.3 5.3

S216 HM N Z 4 λ40° γ3° DIN 6535HA AlTiN h9 DORMER

S216

2.00 - 20.00

d_1 Ø mm	d_2 Øh_6 mm	l_2 mm	l_1 mm	z	S216
2.00	4	6.5	40	4	S2162.0
3.00	3	9	40	4	S2163.0XD3
3.00	6	9	50	4	S2163.0XD6
4.00	4	12	50	4	S2164.0XD4
4.00	6	12	50	4	S2164.0XD6
5.00	5	15	50	4	S2165.0
6.00	6	16	50	4	S2166.0
8.00	8	20	64	4	S2168.0
10.00	10	22	70	4	S21610.0
12.00	12	25	75	4	S21612.0
14.00	14	32	90	4	S21614.0
16.00	16	32	90	4	S21616.0
18.00	18	38	100	4	S21618.0
20.00	20	38	100	4	S21620.0

S904
S944

- 立铣刀
- Fresa de Topo
- Fresas de acabado
- End Mill

S904	■	1.1 1.2 1.3 1.4 3.1 3.3 4.1 5.1 6.1 6.2 6.3
	•	1.5 1.6 3.2 3.4 4.2 4.3 5.2 5.3 6.4 7.1 7.2 7.3 8.1 8.2 8.3
S944	■	1.1 1.2 1.3 1.4 1.5 3.1 3.2 3.3 3.4 4.1 5.1 6.1 6.2 6.3
	•	1.6 4.2 4.3 5.2 5.3 6.4 7.1 7.2 7.3 8.1 8.2 8.3

S904	HM		N	Z 4		λ30° γ12°	DIN 6535HA		h12		DORMER	
S944	HM		N	Z 4		λ30° γ12°	DIN 6535HB	TiAlN	h12		DORMER	S991 437

d_1 Ø mm	Ch ±0.03x45° mm	d_2 Øh_6 mm	l_2 mm	l_1 mm	z	S904	S944
2.00	0.08	3	6	38	4	S9042.0	S9442.0 [2]
2.50	0.08	3	9	38	4	S9042.5	S9442.5 [2]
3.00	0.08	3	12	38	4	S9043.0	S9443.0 [2]
4.00	0.08	4	14	50	4	S9044.0	S9444.0 [2]
5.00	0.13	5	16	50	4	S9045.0	S9445.0 [2]
6.00	0.13	6	19	57	4	S9046.0	S9446.0
7.00	0.13	8	19	63	4	S9047.0	S9447.0
8.00	0.13	8	19	63	4	S9048.0	S9448.0
9.00	0.13	10	21	72	4	S9049.0	S9449.0
10.00	0.20	10	22	72	4	S90410.0 [1]	S94410.0 [1]
12.00	0.20	12	25	73	4	S90412.0 [1]	S94412.0 [1]
14.00	0.20	14	30	83	4	S90414.0 [1]	S94414.0 [1]
16.00	0.20	16	32	92	4	S90416.0 [1]	S94416.0 [1]
18.00	0.20	18	32	92	4	S90418.0 [1]	S94418.0 [1]
20.00	0.30	20	38	104	4	S90420.0 [1]	S94420.0 [1]

[1] Ch ± 0.05x45° mm
[2] 圆柱柄 / Haste cilíndrica / Mango cilíndrico / Cylindrical shank

S717
S217

- 立铣刀
- Fresa de Topo
- Fresas de acabado
- End Mill

S717	▪	1.1 1.2 1.3 1.4 1.5 2.1 2.2 3.1 3.2 3.3 3.4 4.2 5.2
	•	6.1 6.2 6.3 6.4 7.1 7.2 7.3 7.4
S217	▪	1.6 2.3 2.4 4.3 5.3

S717	HM		N	Z 4		λ40° γ10°	DIN 6535HA	AlCrN	h9		DORMER
S217	HM		N	Z 4		λ40° γ3°	DIN 6535HA	AlTiN	h9		DORMER

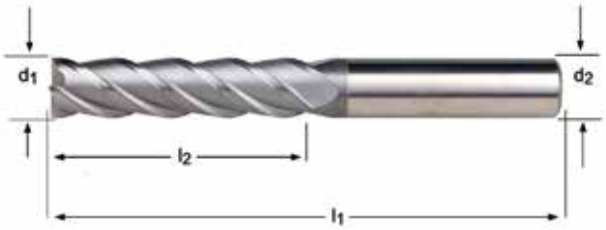

d_1 Ø mm	d_2 Øh_6 mm	l_2 mm	l_1 mm	z	S717	S217
3.00	3	19	60	4	S7173.0	S2173.0XD3
3.00	6	19	75	4		S2173.0XD6
4.00	4	19	60	4	S7174.0	S2174.0XD4
4.00	6	19	75	4		S2174.0XD6
5.00	5	19	60	4	S7175.0	S2175.0
6.00	6	31	75	4	S7176.0	S2176.0
8.00	8	31	75	4	S7178.0	S2178.0
10.00	10	31	75	4	S71710.0	S21710.0
12.00	12	50	100	4	S71712.0	S21712.0
14.00	14	57	125	4	S71714.0	S21714.0
16.00	16	57	125	4	S71716.0	S21716.0
18.00	18	57	125	4	S71718.0	S21718.0
20.00	20	57	125	4	S71720.0	S21720.0

DORMER

S718
S218

- 立铣刀
- Fresa de Topo
- Fresas de acabado
- End Mill

S718	▪	1.1 1.2 1.3 1.4 1.5 2.1 2.2 3.1 3.2 3.3 3.4 4.2 5.2
	•	6.1 6.2 6.3 6.4 7.1 7.2 7.3 7.4
S218	▪	1.6 2.3 2.4 4.3 5.3

S718	HM		N	Z 4		λ40° γ10°	DIN 6535HA	AlCrN	h9		DORMER
S218	HM		N	Z 4		λ40° γ3°	DIN 6535HA	AlTiN	h9		DORMER

d_1 Ø mm	d_2 Øh_6 mm	l_2 mm	l_1 mm	z	S718	S218
3.00	3	25	100	4	S7183.0	S2183.0
4.00	4	31	100	4	S7184.0	S2184.0
5.00	5	31	100	4	S7185.0	S2185.0
6.00	6	38	100	4	S7186.0	S2186.0
8.00	8	41	100	4	S7188.0	S2188.0
10.00	10	57	125	4	S71810.0	S21810.0
12.00	12	75	150	4	S71812.0	S21812.0
14.00	14	75	150	4	S71814.0	S21814.0
16.00	16	75	150	4	S71816.0	S21816.0
18.00	18	75	150	4	S71818.0	S21818.0
20.00	20	75	150	4	S71820.0	S21820.0

S761
S260

- 立铣刀
- Fresa de Topo
- Fresas de acabado
- End Mill

S761	▪	1.1	1.2	1.3	1.4	1.5	2.1	2.2	3.1	3.2	3.3	3.4	4.2	5.2
S260	▪	1.6	1.7	2.3	2.4	4.3	5.3							

S761	HM		N	Z 4		λ40° γ10°	DIN 6535HA	AlCrN	h9		DORMER
S260	HM		N	Z 4		λ40° γ4°	DIN 6535HA	AlCrN	h9		DORMER

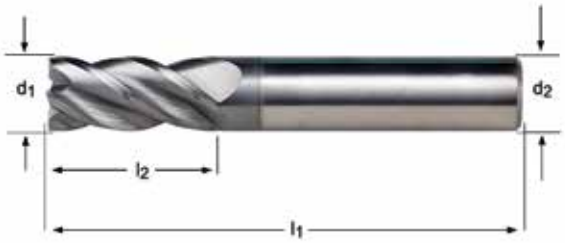

S761	S260
	
3.00 - 20.00	3.00 - 20.00

d_1 Ø mm	d_2 Øh_6 mm	l_2 mm	l_1 mm	z	S761	S260
3.00	6	9	57	4	S7613.0	S2603.0
4.00	6	12	57	4	S7614.0	S2604.0
5.00	6	13	57	4	S7615.0	S2605.0
6.00	6	13	57	4	S7616.0	S2606.0
8.00	8	20	64	4	S7618.0	S2608.0
10.00	10	22	72	4	S76110.0	S26010.0
12.00	12	26	83	4	S76112.0	S26012.0
14.00	14	32	83	4	S76114.0	S26014.0
16.00	16	32	92	4	S76116.0	S26016.0
18.00	18	38	92	4		S26018.0
20.00	20	38	104	4	S76120.0	S26020.0

S766

- 立铣刀
- Fresa de Topo
- Fresas de acabado
- End Mill

S766 ▪ 1.1 1.2 1.3 1.4 1.5 2.1 2.2 3.1 3.2 3.3 3.4 4.2 5.2

S766 HM N Z 4 λ≠ γ10° DIN 6535HA TiSiN h9 DORMER

S766

4.00 - 20.00

d_1 Ø mm	Ch ±0.02x45° mm	d_2 Øh_6 mm	l_2 mm	l_1 mm	z	S766
4.00	0.10	6	11	57	4	S7664.0
5.00	0.10	6	13	57	4	S7665.0
6.00	0.10	6	13	57	4	S7666.0
8.00	0.20	8	20	64	4	S7668.0
10.00	0.20	10	22	72	4	S76610.0
12.00	0.20	12	26	83	4	S76612.0
14.00	0.30	14	26	83	4	S76614.0
16.00	0.30	16	32	92	4	S76616.0
20.00	0.40	20	38	104	4	S76620.0

S225
S525

- 精加工立铣刀
- Fresa de Topo para Acabamento
- Fresas de acabado
- Finishing End Mill

S225	▪	1.6	2.3	2.4	4.3	5.3
S525	▪	1.7	1.8			

S225	HM		N	Z 6-8		λ50° γ3°	DIN 6535HA	AlTiN	h9		DORMER
S525	HM		N	Z 6-8		λ50° γ-26°	DIN 6535HA	TiSiN	h9		DORMER

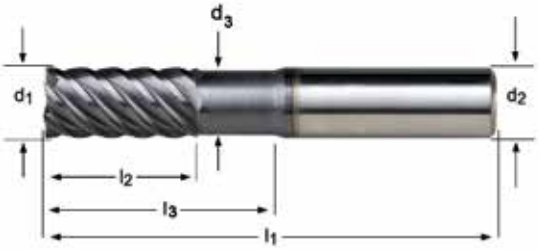

d_1 Ø mm	d_2 Øh_6 mm	l_2 mm	l_1 mm	z	l_3 mm	d_3 Ø mm	S225	S525
3.00	6	8	50	6	20.0	2.8	S2253.0	S5253.0
4.00	6	11	50	6	20.0	3.7	S2254.0	S5254.0
6.00	6	15	50	6	20.0	5.5	S2256.0	S5256.0
8.00	8	20	64	6	30.0	7.4	S2258.0	S5258.0
10.00	10	22	70	6	32.0	9.2	S22510.0	S52510.0
12.00	12	25	75	6	37.0	11.0	S22512.0	S52512.0
14.00	14	30	90	6	44.0	13.0	S22514.0	S52514.0
16.00	16	30	90	8	46.0	15.0	S22516.0	S52516.0
18.00	18	35	100	8	53.0	17.0	S22518.0	S52518.0
20.00	20	38	100	8	58.0	19.0	S22520.0	S52520.0

S226
S526

- 精加工立铣刀
- Fresa de Topo para Acabamento
- Fresas de acabado
- Finishing End Mill

S226	▪	1.6 2.3 2.4 4.3 5.3
S526	▪	1.7 1.8

S226	HM		N	Z 6-8		λ50° γ3°	DIN 6535HA	AlTiN	h9		DORMER
S526	HM		N	Z 6-8		λ50° γ-26°	DIN 6535HA	TiSiN	h9		DORMER

d_1 Ø mm	d_2 Øh_6 mm	l_2 mm	l_1 mm	z	l_3 mm	d_3 Ø mm	S226	S526
3.00	6	19	75	6	30.0	2.8	S2263.0	S5263.0
4.00	6	19	75	6	32.0	3.7	S2264.0	S5264.0
6.00	6	31	75	6	40.0	5.5	S2266.0	S5266.0
8.00	8	31	75	6	40.0	7.4	S2268.0	S5268.0
10.00	10	45	100	6	60.0	9.2	S22610.0	S52610.0
12.00	12	50	100	6	60.0	11.0	S22612.0	S52612.0
14.00	14	57	125	6	85.0	13.0	S22614.0	S52614.0
16.00	16	57	125	8	85.0	15.0	S22616.0	S52616.0
18.00	18	57	125	8	85.0	17.0	S22618.0	S52618.0
20.00	20	57	125	8	85.0	19.0	S22620.0	S52620.0

S227
S527

- 精加工立铣刀
- Fresa de Topo para Acabamento
- Fresas de acabado
- Finishing End Mill

S227	▪	1.6	2.3	2.4	4.3	5.3
S527	▪	1.7	1.8			

S227	HM		N	Z 6-8		λ50° γ3°	DIN 6535HA	AlTiN	h9		DORMER
S527	HM		N	Z 6-8		λ50° γ-26°	DIN 6535HA	TiSiN	h9		DORMER

S227	S527
	
6.00 - 20.00	3.00 - 20.00

d_1 Ø mm	d_2 Øh_6 mm	l_2 mm	l_1 mm	z	l_3 mm	d_3 Ø mm	S227	S527
3.00	6	25	100	6	60.0	2.8		S5273.0
4.00	6	31	100	6	60.0	3.7		S5274.0
6.00	6	38	100	6	60.0	5.5	S2276.0	S5276.0
8.00	8	41	100	6	60.0	7.4	S2278.0	S5278.0
10.00	10	57	125	6	85.0	9.2	S22710.0	S52710.0
12.00	12	75	150	6	110.0	11.0	S22712.0	S52712.0
14.00	14	75	150	6	110.0	13.0	S22714.0	S52714.0
16.00	16	75	150	8	110.0	15.0	S22716.0	S52716.0
18.00	18	75	150	8	110.0	17.0	S22718.0	S52718.0
20.00	20	75	150	8	110.0	19.0	S22720.0	S52720.0

S765

- 粗加工波刃铣刀
- Fresa de Topo para Desbaste
- Fresas desbaste
- Roughing End Mill

S765 ▪ 1.1 1.2 1.3 1.4 1.5 2.1 2.2 3.1 3.2 3.3 3.4 4.2 5.2

S765 HM NR Z 4 λ40° γ10° DIN 6535HA AlCrN h9 DORMER

S765

6.00 - 20.00

d_1 Ø mm	Ch ±0.02x45° mm	d_2 Øh_6 mm	l_2 mm	l_1 mm	z	S765
6.00	0.10	6	16	50	4	S7656.0
8.00	0.20	8	20	64	4	S7658.0
10.00	0.20	10	22	70	4	S76510.0
12.00	0.20	12	26	75	4	S76512.0
14.00	0.30	14	32	90	4	S76514.0
16.00	0.30	16	32	90	4	S76516.0
18.00	0.30	18	38	100	4	S76518.0
20.00	0.40	20	38	100	4	S76520.0

S264

- 粗加工波刃铣刀
- Fresa de Topo para Desbaste
- Fresas desbaste
- Roughing End Mill

S264 ▪ 1.6 1.7 2.3 2.4 4.3 5.3

S264 HM NR Z 4 λ40° γ4° DIN 6535HB AlCrN h9 DORMER

S264

6.00 - 20.00

d_1 Ø mm	Ch ±0.02x45° mm	d_2 Øh_6 mm	l_2 mm	l_1 mm	z	S264
6.00	0.10	6	13	57	4	S2646.0
8.00	0.20	8	20	64	4	S2648.0
10.00	0.20	10	22	72	4	S26410.0
12.00	0.20	12	26	83	4	S26412.0
14.00	0.30	14	26	83	4	S26414.0
16.00	0.30	16	32	92	4	S26416.0
18.00	0.30	18	32	92	4	S26418.0
20.00	0.40	20	38	104	4	S26420.0

DORMER

S524

- 圆角立铣刀
- Fresa de Topo com Raio de Canto
- Fresas con radios en el extremo
- Corner Radius End Mill

S524 ▪ **1.7** **1.8**

S524 HM | N | Z 4 | λ40° γ-6° | DIN 6535HA | TiSiN | h9 | DORMER

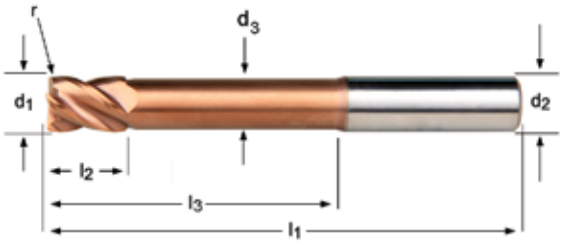

S524

3.00 - 16.00

d_1 Ø mm	r ±0.01 mm	d_2 Øh_6 mm	l_2 mm	l_1 mm	z	l_3 mm	d_3 Ø mm	S524
3.00	0.30	6	5	75	4	30.0	2.8	S5243.0XR0.3
4.00	0.30	6	8	75	4	32.0	3.7	S5244.0XR0.3
4.00	0.50	6	8	75	4	32.0	3.7	S5244.0XR0.5
5.00	0.30	6	9	75	4	32.0	4.6	S5245.0XR0.3
5.00	0.50	6	9	75	4	32.0	4.6	S5245.0XR0.5
6.00	0.30	6	10	75	4	40.0	5.5	S5246.0XR0.3
6.00	0.50	6	10	75	4	40.0	5.5	S5246.0XR0.5
6.00	1.00	6	10	75	4	40.0	5.5	S5246.0XR1.0
8.00	0.30	8	12	75	4	40.0	7.4	S5248.0XR0.3
8.00	0.50	8	12	75	4	40.0	7.4	S5248.0XR0.5
8.00	1.00	8	12	75	4	40.0	7.4	S5248.0XR1.0
10.00	0.50	10	14	75	4	40.0	9.2	S52410.0XR0.5
10.00	1.00	10	14	75	4	40.0	9.2	S52410.0XR1.0
10.00	2.00	10	14	75	4	40.0	9.2	S52410.0XR2.0
12.00	0.50	12	16	100	4	60.0	11.0	S52412.0XR0.5
12.00	1.00	12	16	100	4	60.0	11.0	S52412.0XR1.0
12.00	2.00	12	16	100	4	60.0	11.0	S52412.0XR2.0
16.00	0.50	16	22	125	4	85.0	15.0	S52416.0XR0.5
16.00	1.00	16	22	125	4	85.0	15.0	S52416.0XR1.0
16.00	2.00	16	22	125	4	85.0	15.0	S52416.0XR2.0
16.00	3.00	16	22	125	4	85.0	15.0	S52416.0XR3.0

S521

- 圆角立铣刀
- Fresa de Topo com Raio de Canto
- Fresas con radios en el extremo
- Corner Radius End Mill

S521 ▪ **1.7** **1.8**

S521 HM N Z 4 λ45° γ-10° DIN 6535HA TiSiN h9

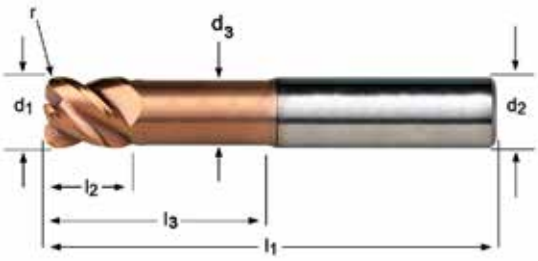

S521

3.00 - 16.00

d_1 Ø mm	r ±0.01 mm	d_2 Øh_6 mm	l_2 mm	l_1 mm	z	l_3 mm	d_3 Ø mm	S521
3.00	0.30	6	4	60	4	14.0	2.8	S5213.0XR0.3
4.00	0.30	6	5	60	4	16.0	3.7	S5214.0XR0.3
4.00	0.50	6	5	60	4	16.0	3.7	S5214.0XR0.5
5.00	0.30	6	6	60	4	18.0	4.6	S5215.0XR0.3
5.00	0.50	6	6	60	4	18.0	4.6	S5215.0XR0.5
6.00	0.50	6	7	60	4	20.0	5.5	S5216.0XR0.5
6.00	1.00	6	7	60	4	20.0	5.5	S5216.0XR1.0
8.00	0.50	8	9	64	4	26.0	7.4	S5218.0XR0.5
8.00	1.00	8	9	64	4	26.0	7.4	S5218.0XR1.0
10.00	1.00	10	11	70	4	31.0	9.2	S52110.0XR1.0
10.00	2.00	10	11	70	4	31.0	9.2	S52110.0XR2.0
12.00	1.00	12	13	75	4	37.0	11.0	S52112.0XR1.0
12.00	2.00	12	13	75	4	37.0	11.0	S52112.0XR2.0
16.00	1.00	16	17	90	4	43.0	15.0	S52116.0XR1.0
16.00	2.00	16	17	90	4	43.0	15.0	S52116.0XR2.0
16.00	3.00	16	17	90	4	43.0	15.0	S52116.0XR3.0

DORMER

S523

- 圆角立铣刀
- Fresa de Topo com Raio de Canto
- Fresas con radios en el extremo
- Corner Radius End Mill

S523 ▪ **1.7** **1.8**

S523 HM | N | Z 4 | λ40° γ-6° | DIN 6535HA | TiSiN | h9 | DORMER

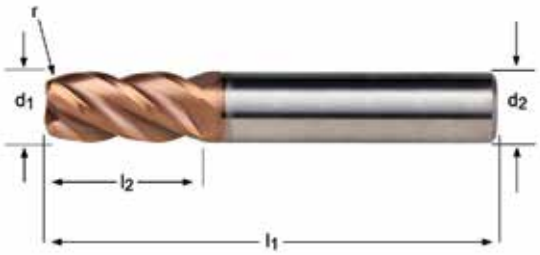

S523

1.50 - 16.00

d_1 Ø mm	r ±0.01 mm	d_2 Øh_6 mm	l_2 mm	l_1 mm	z	S523
1.50	0.20	6	4.5	50	4	S5231.5XR0.2
2.00	0.20	6	6.5	50	4	S5232.0XR0.2
3.00	0.20	3	9	50	4	S5233.0XR0.2XD3
3.00	0.30	3	9	50	4	S5233.0XR0.3XD3
3.00	0.20	6	9	50	4	S5233.0XR0.2XD6
3.00	0.30	6	9	50	4	S5233.0XR0.3XD6
3.00	0.50	6	9	50	4	S5233.0XR0.5XD6
4.00	0.30	4	12	50	4	S5234.0XR0.3XD4
4.00	0.50	4	12	50	4	S5234.0XR0.5XD4
4.00	0.30	6	12	50	4	S5234.0XR0.3XD6
4.00	0.50	6	12	50	4	S5234.0XR0.5XD6
5.00	0.30	5	15	50	4	S5235.0XR0.3XD5
5.00	0.50	5	15	50	4	S5235.0XR0.5XD5
5.00	0.30	6	15	50	4	S5235.0XR0.3XD6
5.00	0.50	6	15	50	4	S5235.0XR0.5XD6
6.00	0.30	6	16	50	4	S5236.0XR0.3
6.00	0.50	6	16	50	4	S5236.0XR0.5
6.00	1.00	6	16	50	4	S5236.0XR1.0
8.00	0.30	8	20	64	4	S5238.0XR0.3
8.00	0.50	8	20	64	4	S5238.0XR0.5
8.00	1.00	8	20	64	4	S5238.0XR1.0
8.00	2.00	8	20	64	4	S5238.0XR2.0
10.00	0.50	10	22	70	4	S52310.0XR0.5
10.00	1.00	10	22	70	4	S52310.0XR1.0
10.00	1.50	10	22	70	4	S52310.0XR1.5
10.00	2.00	10	22	70	4	S52310.0XR2.0
12.00	0.50	12	25	75	4	S52312.0XR0.5
12.00	1.00	12	25	75	4	S52312.0XR1.0
12.00	2.00	12	25	75	4	S52312.0XR2.0
12.00	3.00	12	25	75	4	S52312.0XR3.0
16.00	0.50	16	32	90	4	S52316.0XR0.5
16.00	1.00	16	32	90	4	S52316.0XR1.0
16.00	2.00	16	32	90	4	S52316.0XR2.0
16.00	3.00	16	32	90	4	S52316.0XR3.0

S763

- 圆角立铣刀
- Fresa de Topo com Raio de Canto
- Fresas con radios en el extremo
- Corner Radius End Mill

S763 ▪ 1.1 1.2 1.3 1.4 1.5 2.1 2.2 3.1 3.2 3.3 3.4 4.2 5.2

S763 HM N Z 4 λ40° γ10° DIN 6535HA AlCrN h9

S763

3.00 - 20.00

d_1 Ø mm	r ±0.01 mm	d_2 Øh_6 mm	l_2 mm	l_1 mm	z	S763
3.00	0.30	3	9	40	4	S7633.0XR0.3
4.00	0.30	4	12	50	4	S7634.0XR0.3
4.00	0.50	4	12	50	4	S7634.0XR0.5
5.00	0.30	5	15	50	4	S7635.0XR0.3
5.00	0.50	5	15	50	4	S7635.0XR0.5
6.00	0.50	6	16	50	4	S7636.0XR0.5
6.00	1.00	6	16	50	4	S7636.0XR1.0
8.00	0.50	8	20	64	4	S7638.0XR0.5
8.00	1.00	8	20	64	4	S7638.0XR1.0
10.00	0.50	10	22	70	4	S76310.0XR0.5
10.00	1.00	10	22	70	4	S76310.0XR1.0
10.00	2.00	10	22	70	4	S76310.0XR2.0
12.00	1.00	12	25	75	4	S76312.0XR1.0
12.00	2.00	12	25	75	4	S76312.0XR2.0
12.00	3.00	12	25	75	4	S76312.0XR3.0
14.00	1.50	14	32	90	4	S76314.0XR1.5
16.00	1.00	16	32	90	4	S76316.0XR1.0
16.00	2.00	16	32	90	4	S76316.0XR2.0
16.00	3.00	16	32	90	4	S76316.0XR3.0
18.00	2.00	18	38	100	4	S76318.0XR2.0
20.00	3.00	20	38	100	4	S76320.0XR3.0

DORMER

S262

- 圆角立铣刀
- Fresa de Topo com Raio de Canto
- Fresas con radios en el extremo
- Corner Radius End Mill

S262 ▪ 1.6 1.7 2.3 2.4 4.3 5.3

S262 HM N Z 4 λ40° γ4° DIN 6535HA AlCrN h9 DORMER

S262

3.00 - 20.00

d_1 Ø mm	r ±0.01 mm	d_2 Øh_6 mm	l_2 mm	l_1 mm	z	S262
3.00	0.30	6	9	50	4	S2623.0XR0.3
3.00	0.50	6	9	50	4	S2623.0XR0.5
4.00	0.30	6	12	57	4	S2624.0XR0.3
4.00	0.50	6	12	57	4	S2624.0XR0.5
4.00	1.00	6	12	57	4	S2624.0XR1.0
5.00	0.30	6	15	57	4	S2625.0XR0.3
5.00	0.50	6	15	57	4	S2625.0XR0.5
6.00	0.30	6	16	57	4	S2626.0XR0.3
6.00	0.50	6	16	57	4	S2626.0XR0.5
6.00	1.00	6	16	57	4	S2626.0XR1.0
8.00	0.30	8	20	64	4	S2628.0XR0.3
8.00	0.50	8	20	64	4	S2628.0XR0.5
8.00	1.00	8	20	64	4	S2628.0XR1.0
8.00	1.50	8	20	64	4	S2628.0XR1.5
8.00	2.00	8	20	64	4	S2628.0XR2.0
10.00	0.30	10	22	72	4	S26210.0XR0.3
10.00	0.50	10	22	72	4	S26210.0XR0.5
10.00	1.00	10	22	72	4	S26210.0XR1.0
10.00	1.50	10	22	72	4	S26210.0XR1.5
10.00	2.00	10	22	72	4	S26210.0XR2.0
12.00	0.30	12	26	83	4	S26212.0XR0.3
12.00	0.50	12	26	83	4	S26212.0XR0.5
12.00	1.00	12	26	83	4	S26212.0XR1.0
12.00	2.00	12	26	83	4	S26212.0XR2.0
12.00	2.50	12	26	83	4	S26212.0XR2.5
12.00	3.00	12	26	83	4	S26212.0XR3.0
14.00	0.30	14	32	83	4	S26214.0XR0.3
14.00	0.50	14	32	83	4	S26214.0XR0.5
14.00	1.00	14	32	83	4	S26214.0XR1.0
14.00	2.00	14	32	83	4	S26214.0XR2.0
14.00	3.00	14	32	83	4	S26214.0XR3.0
16.00	0.30	16	32	92	4	S26216.0XR0.3
16.00	0.50	16	32	92	4	S26216.0XR0.5
16.00	1.00	16	32	92	4	S26216.0XR1.0
16.00	2.00	16	32	92	4	S26216.0XR2.0
16.00	2.50	16	32	92	4	S26216.0XR2.5
16.00	3.00	16	32	92	4	S26216.0XR3.0
16.00	4.00	16	32	92	4	S26216.0XR4.0
18.00	0.30	18	38	92	4	S26218.0XR0.3
18.00	0.50	18	38	92	4	S26218.0XR0.5

d_1 Ø mm	r ±0.01 mm	d_2 Øh_6 mm	l_2 mm	l_1 mm	z	S262
18.00	1.00	18	38	92	4	S26218.0XR1.0
18.00	2.00	18	38	92	4	S26218.0XR2.0
18.00	3.00	18	38	92	4	S26218.0XR3.0
20.00	0.30	20	38	104	4	S26220.0XR0.3
20.00	0.50	20	38	104	4	S26220.0XR0.5
20.00	1.00	20	38	104	4	S26220.0XR1.0
20.00	2.00	20	38	104	4	S26220.0XR2.0
20.00	2.50	20	38	104	4	S26220.0XR2.5
20.00	3.00	20	38	104	4	S26220.0XR3.0
20.00	4.00	20	38	104	4	S26220.0XR4.0

S767

- 圆角立铣刀
- Fresa de Topo com Raio de Canto
- Fresas con radios en el extremo
- Corner Radius End Mill

S767 ▪ 1.1 1.2 1.3 1.4 1.5 2.1 2.2 3.1 3.2 3.3 3.4 4.2 5.2

S767 HM N Z 4 λ≠ γ10° DIN 6535HA TiSiN h9 DORMER

S767

4.00 - 20.00

d_1 Ø mm	r ±0.01 mm	d_2 Øh_6 mm	l_2 mm	l_1 mm	z	S767
4.00	0.30	6	11	57	4	S7674.0XR0.3
4.00	0.50	6	11	57	4	S7674.0XR0.5
5.00	0.30	6	13	57	4	S7675.0XR0.3
5.00	0.50	6	13	57	4	S7675.0XR0.5
6.00	0.30	6	13	57	4	S7676.0XR0.3
6.00	0.50	6	13	57	4	S7676.0XR0.5
6.00	1.00	6	13	57	4	S7676.0XR1.0
8.00	0.30	8	20	64	4	S7678.0XR0.3
8.00	0.50	8	20	64	4	S7678.0XR0.5
8.00	1.00	8	20	64	4	S7678.0XR1.0
10.00	0.30	10	22	72	4	S76710.0XR0.3
10.00	0.50	10	22	72	4	S76710.0XR0.5
10.00	1.00	10	22	72	4	S76710.0XR1.0
12.00	0.30	12	26	83	4	S76712.0XR0.3
12.00	0.50	12	26	83	4	S76712.0XR0.5
12.00	1.00	12	26	83	4	S76712.0XR1.0
12.00	2.00	12	26	83	4	S76712.0XR2.0
16.00	0.30	16	32	92	4	S76716.0XR0.3
16.00	0.50	16	32	92	4	S76716.0XR0.5
16.00	1.00	16	32	92	4	S76716.0XR1.0
16.00	2.00	16	32	92	4	S76716.0XR2.0
20.00	0.30	20	38	104	4	S76720.0XR0.3
20.00	0.50	20	38	104	4	S76720.0XR0.5
20.00	1.00	20	38	104	4	S76720.0XR1.0
20.00	2.00	20	38	104	4	S76720.0XR2.0

S536

- 高进给立铣刀
- Fresa de Topo de alto avanço
- Fresas de acabado de gran avance
- High Feed End Mill

S536 ▪ **1.7** **1.8**

S536 HM | N | Z 4-6 | λ25° γ0° | DIN 6535HA | TiSiN | h9 | DORMER

S536

6.00 - 12.00

d_1 Ø mm	r ±0.01 mm	d_2 Øh_6 mm	l_2 mm	l_1 mm	z	S536
6.00	1.00	6	6	60	4	S5366.0XR1.0
8.00	2.00	8	8	64	6	S5368.0XR2.0
10.00	2.00	10	10	75	6	S53610.0XR2.0
12.00	2.00	12	12	75	6	S53612.0XR2.0

DORMER

S229

- 球头立铣刀
- Fresa de topo esférico
- Fresas con punta esferica
- Ball-Nosed End Mill

S229 ▪ **1.6** **2.3** **2.4** **4.3** **5.3**

S229 HM N Z 2 λ30° γ3° DIN 6535HA TiSiN h9 DORMER

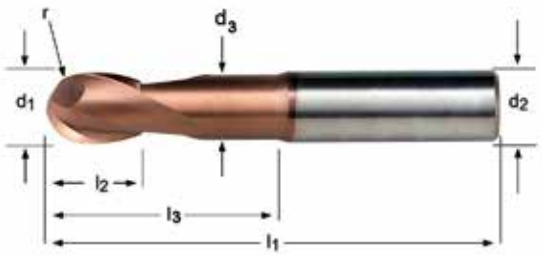

S229

1.50 - 16.00

d_1 Ø mm	r +0/-0.02 mm	d_2 Øh_6 mm	l_2 mm	l_1 mm	z	l_3 mm	d_3 Ø mm	S229
1.50	0.75	4	3	50	2	6.0	1.4	S2291.5XD4
2.00	1.00	3	4	50	2	8.0	1.9	S2292.0XD3
2.00	1.00	4	4	50	2	8.0	1.9	S2292.0XD4
3.00	1.50	3	5	50	2	14.0	2.8	S2293.0XD3
3.00	1.50	6	5	50	2	14.0	2.8	S2293.0XD6
4.00	2.00	4	8	50	2	20.0	3.7	S2294.0XD4
4.00	2.00	6	8	50	2	20.0	3.7	S2294.0XD6
5.00	2.50	5	9	50	2	20.0	4.6	S2295.0XD5
5.00	2.50	6	9	50	2	20.0	4.6	S2295.0XD6
6.00	3.00	6	10	50	2	20.0	5.5	S2296.0
8.00	4.00	8	12	64	2	30.0	7.4	S2298.0
10.00	5.00	10	14	70	2	32.0	9.2	S22910.0
12.00	6.00	12	16	75	2	38.0	11.0	S22912.0
14.00	7.00	14	32	90	2	44.0	13.0	S22914.0
16.00	8.00	16	32	90	2	46.0	15.0	S22916.0

S231

- 球头立铣刀
- Fresa de topo esférico
- Fresas con punta esferica
- Ball-Nosed End Mill

S231 ▪ **1.6** **2.3** **2.4** **4.3** **5.3**

S231 HM | N | Z 2 | λ30° γ3° | DIN 6535HA | TiSiN | h9 | DORMER

S231

1.50 - 16.00

d_1 Ø mm	r +0/-0.02 mm	d_2 Øh_6 mm	l_2 mm	l_1 mm	z	l_3 mm	d_3 Ø mm	S231
1.50	0.75	4	3	75	2	10.0	1.4	S2311.5XD4
2.00	1.00	3	4	60	2	14.0	1.9	S2312.0XD3
2.00	1.00	4	4	75	2	14.0	1.9	S2312.0XD4
3.00	1.50	3	5	60	2	21.0	2.8	S2313.0XD3
3.00	1.50	6	5	75	2	21.0	2.8	S2313.0XD6
4.00	2.00	4	8	60	2	28.0	3.7	S2314.0XD4
4.00	2.00	6	8	75	2	28.0	3.7	S2314.0XD6
5.00	2.50	5	9	60	2	32.0	4.6	S2315.0
6.00	3.00	6	10	75	2	40.0	5.5	S2316.0
8.00	4.00	8	10	75	2	40.0	7.4	S2318.0
10.00	5.00	10	12	75	2	40.0	9.2	S23110.0
12.00	6.00	12	16	100	2	60.0	11.0	S23112.0
14.00	7.00	14	32	125	2	80.0	13.0	S23114.0
16.00	8.00	16	32	125	2	80.0	15.0	S23116.0

S233

- 球头立铣刀
- Fresa de topo esférico
- Fresas con punta esferica
- Ball-Nosed End Mill

S233 ▪ **1.6** **2.3** **2.4** **4.3** **5.3**

S233 HM N Z 2 λ30° γ3° DIN 6535HA TiSiN h9 DORMER

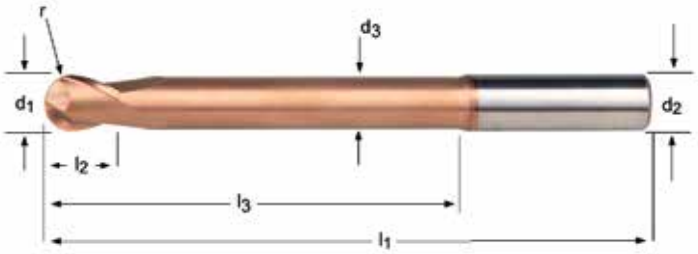

S233

2.00 - 16.00

d_1 Ø mm	r +0/-0.02 mm	d_2 Øh_6 mm	l_2 mm	l_1 mm	z	l_3 mm	d_3 Ø mm	S233
2.00	1.00	3	4	100	2	20.0	1.9	S2332.0XD3
2.00	1.00	4	4	100	2	20.0	1.9	S2332.0XD4
3.00	1.50	3	5	100	2	30.0	2.8	S2333.0XD3
3.00	1.50	6	5	100	2	30.0	2.8	S2333.0XD6
4.00	2.00	4	8	100	2	40.0	3.7	S2334.0XD4
4.00	2.00	6	8	100	2	40.0	3.7	S2334.0XD6
5.00	2.50	5	9	100	2	50.0	4.6	S2335.0
6.00	3.00	6	10	100	2	60.0	5.5	S2336.0
8.00	4.00	8	12	100	2	60.0	7.4	S2338.0
10.00	5.00	10	14	125	2	85.0	9.2	S23310.0
12.00	6.00	12	16	125	2	85.0	11.0	S23312.0
14.00	7.00	14	32	150	2	110.0	13.0	S23314.0
16.00	8.00	16	32	150	2	110.0	15.0	S23316.0

S529

- 球头立铣刀
- Fresa de topo esférico
- Fresas con punta esferica
- Ball-Nosed End Mill

S529 ▪ **1.7** **1.8**

S529 HM N Z 2 λ30° γ-10° DIN 6535HA TiSiN h9 DORMER

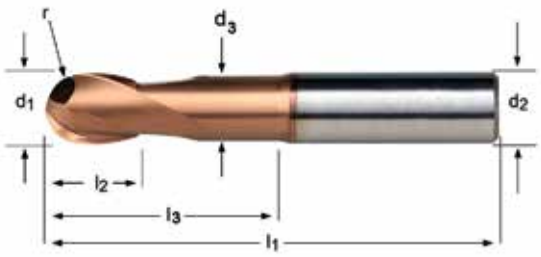

S529

1.50 - 16.00

d_1 Ø mm	r +0/-0.02 mm	d_2 Øh_6 mm	l_2 mm	l_1 mm	z	l_3 mm	d_3 Ø mm	S529
1.50	0.75	6	3	50	2	6.0	1.4	S5291.5
2.00	1.00	4	4	50	2	8.0	1.9	S5292.0XD4
2.00	1.00	6	4	50	2	8.0	1.9	S5292.0XD6
3.00	1.50	3	5	50	2	14.0	2.8	S5293.0XD3
3.00	1.50	6	5	50	2	14.0	2.8	S5293.0XD6
4.00	2.00	4	8	50	2	20.0	3.7	S5294.0XD4
4.00	2.00	6	8	50	2	20.0	3.7	S5294.0XD6
5.00	2.50	5	9	50	2	20.0	4.6	S5295.0XD5
5.00	2.50	6	9	50	2	20.0	4.6	S5295.0XD6
6.00	3.00	6	10	50	2	20.0	5.5	S5296.0
8.00	4.00	8	12	64	2	30.0	7.4	S5298.0
10.00	5.00	10	14	70	2	32.0	9.2	S52910.0
12.00	6.00	12	16	75	2	38.0	11.0	S52912.0
14.00	7.00	14	32	90	2	44.0	13.0	S52914.0
16.00	8.00	16	32	90	2	46.0	15.0	S52916.0

DORMER

S531

- 球头立铣刀
- Fresa de topo esférico
- Fresas con punta esferica
- Ball-Nosed End Mill

S531 ▪ **1.7** **1.8**

S531 HM | N | Z 2 | λ30° γ-10° | DIN 6535HA | TiSiN | h9 | DORMER

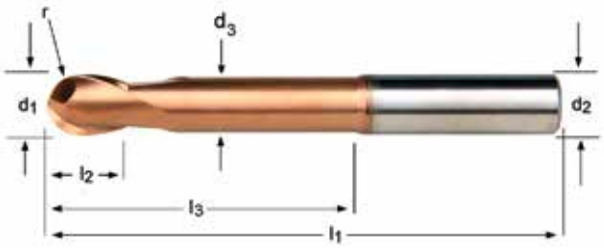

S531

1.50 - 16.00

d_1 Ø mm	r +0/-0.02 mm	d_2 Øh_6 mm	l_2 mm	l_1 mm	z	l_3 mm	d_3 Ø mm	S531
1.50	0.75	6	3	75	2	10.0	1.4	S5311.5
2.00	1.00	4	4	75	2	14.0	1.9	S5312.0XD4
2.00	1.00	6	4	75	2	14.0	1.9	S5312.0XD6
3.00	1.50	3	5	60	2	21.0	2.8	S5313.0XD3
3.00	1.50	6	5	75	2	21.0	2.8	S5313.0XD6
4.00	2.00	4	8	60	2	28.0	3.7	S5314.0XD4
4.00	2.00	6	8	75	2	28.0	3.7	S5314.0XD6
5.00	2.50	5	9	60	2	32.0	4.6	S5315.0XD5
5.00	2.50	6	9	75	2	32.0	4.6	S5315.0XD6
6.00	3.00	6	10	75	2	40.0	5.5	S5316.0
8.00	4.00	8	12	75	2	40.0	7.4	S5318.0
10.00	5.00	10	14	75	2	40.0	9.2	S53110.0
12.00	6.00	12	16	100	2	60.0	11.0	S53112.0
14.00	7.00	14	32	125	2	80.0	13.0	S53114.0
16.00	8.00	16	32	125	2	80.0	15.0	S53116.0

S533

- 球头立铣刀
- Fresa de topo esférico
- Fresas con punta esferica
- Ball-Nosed End Mill

S533 ▪ **1.7** **1.8**

S533 HM N Z 2 λ30° γ-10° DIN 6535HA TiSiN h9 DORMER

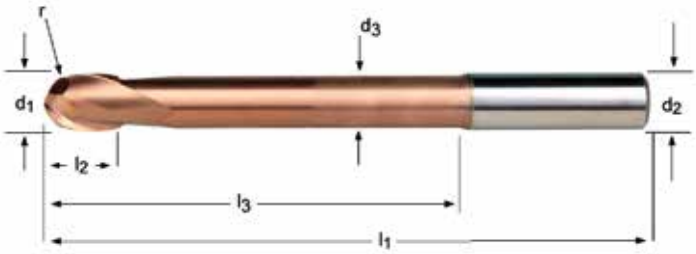

S533

2.00 - 16.00

d_1 Ø mm	r +0/-0.02 mm	d_2 Øh_6 mm	l_2 mm	l_1 mm	z	l_3 mm	d_3 Ø mm	S533
2.00	1.00	4	4	100	2	20.0	1.9	S5332.0XD4
2.00	1.00	6	4	100	2	20.0	1.9	S5332.0XD6
3.00	1.50	4	5	100	2	30.0	2.8	S5333.0XD4
3.00	1.50	6	5	100	2	30.0	2.8	S5333.0XD6
4.00	2.00	4	8	100	2	40.0	3.7	S5334.0XD4
4.00	2.00	6	8	100	2	40.0	3.7	S5334.0XD6
5.00	2.50	5	9	100	2	50.0	4.6	S5335.0XD5
5.00	2.50	6	9	100	2	50.0	4.6	S5335.0XD6
6.00	3.00	6	10	100	2	60.0	5.5	S5336.0
8.00	4.00	8	12	100	2	60.0	7.4	S5338.0
10.00	5.00	10	14	125	2	85.0	9.2	S53310.0
12.00	6.00	12	16	125	2	85.0	11.0	S53312.0
14.00	7.00	14	32	150	2	110.0	13.0	S53314.0
16.00	8.00	16	32	150	2	110.0	15.0	S53316.0

S501

- 球头立铣刀
- Fresa de topo esférico
- Fresas con punta esferica
- Ball-Nosed End Mill

S501																					
▪	1.1	1.2	1.3	1.4	1.5	1.6	2.1	2.2	2.3	3.1	3.2	3.3	3.4	4.1	4.2	4.3	5.1	5.2	5.3	6.1	
	6.2	6.3	6.4	7.1	7.2	7.3	7.4	8.1	8.2	8.3	9.1										
•	1.7																				

S501 HM | N | Z 2 | λ30° γ10° | DIN 6535HA | X-CEED | h9 | DORMER

S501

1.00 - 16.00

d_1 Ø mm	r ±0.01 mm	d_2 Øh_6 mm	l_2 mm	l_1 mm	z	S501
1.00	0.50	3	3	38	2	S5011.0
1.50	0.75	3	3	38	2	S5011.5
2.00	1.00	3	6	38	2	S5012.0
2.50	1.25	3	7	38	2	S5012.5
3.00	1.50	3	7	38	2	S5013.0
4.00	2.00	6	8	57	2	S5014.0
5.00	2.50	6	10	57	2	S5015.0
6.00	3.00	6	10	57	2	S5016.0
7.00	3.50	8	13	63	2	S5017.0
8.00	4.00	8	16	63	2	S5018.0
9.00	4.50	10	16	72	2	S5019.0
10.00	5.00	10	19	72	2	S50110.0
12.00	6.00	12	22	83	2	S50112.0
16.00	8.00	16	26	92	2	S50116.0

S534

- 球头立铣刀
- Fresa de topo esférico
- Fresas con punta esferica
- Ball-Nosed End Mill

S534 ▪ **1.7** **1.8**

S534 HM N Z 4 λ30° γ-10° DIN 6535HA TiSiN h9 DORMER

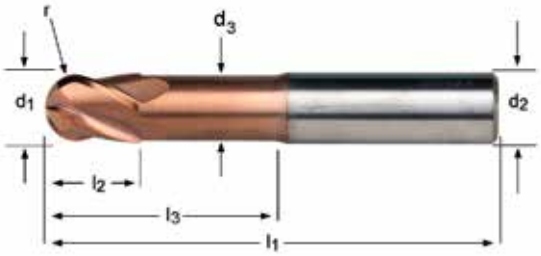

S534

3.00 - 16.00

d_1 Ø mm	r +0/-0.02 mm	d_2 Øh_6 mm	l_2 mm	l_1 mm	z	l_3 mm	d_3 Ø mm	S534
3.00	1.50	6	5	50	4	14.0	2.8	S5343.0
4.00	2.00	6	8	50	4	20.0	3.7	S5344.0
5.00	2.50	6	9	50	4	20.0	4.6	S5345.0
6.00	3.00	6	10	50	4	20.0	5.5	S5346.0
8.00	4.00	8	12	64	4	30.0	7.4	S5348.0
10.00	5.00	10	14	70	4	32.0	9.2	S53410.0
12.00	6.00	12	16	75	4	38.0	11.0	S53412.0
14.00	7.00	14	32	90	4	44.0	13.0	S53414.0
16.00	8.00	16	32	90	4	46.0	15.0	S53416.0

S535

- 球头立铣刀
- Fresa de topo esférico
- Fresas con punta esferica
- Ball-Nosed End Mill

S535 ▪ **1.7** **1.8**

S535 HM | N | Z 4 | λ30° γ-10° | DIN 6535HA | TiSiN | h9 | DORMER

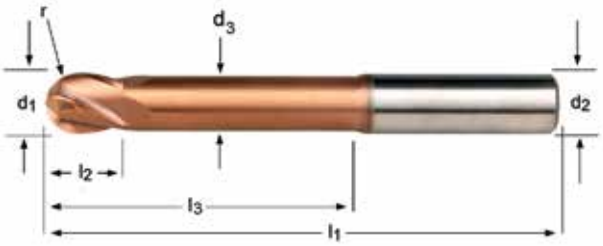

S535

3.00 - 16.00

d_1 Ø mm	r +0/-0.02 mm	d_2 Øh_6 mm	l_2 mm	l_1 mm	z	l_3 mm	d_3 Ø mm	S535
3.00	1.50	6	5	75	4	21.0	2.8	S5353.0
4.00	2.00	6	8	75	4	28.0	3.7	S5354.0
5.00	2.50	6	9	75	4	32.0	4.6	S5355.0
6.00	3.00	6	10	75	4	40.0	5.5	S5356.0
8.00	4.00	8	12	75	4	40.0	7.4	S5358.0
10.00	5.00	10	14	75	4	40.0	9.2	S53510.0
12.00	6.00	12	16	100	4	60.0	11.0	S53512.0
14.00	7.00	14	32	125	4	80.0	13.0	S53514.0
16.00	8.00	16	32	125	4	80.0	15.0	S53516.0

S511

- 球头立铣刀
- Fresa de topo esférico
- Fresas con punta esferica
- Ball-Nosed End Mill

S511																					
	▪	1.1	1.2	1.3	1.4	1.5	1.6	2.1	2.2	2.3	3.1	3.2	3.3	3.4	4.1	4.2	4.3	5.1	5.2	5.3	7.3
		7.4	8.2	8.3	9.1																
	•	1.7	6.1	6.2	6.3	6.4	7.1	7.2	8.1												

S511 HM N Z 4 λ30° γ10° DIN 6535HA X-CEED h9 DORMER

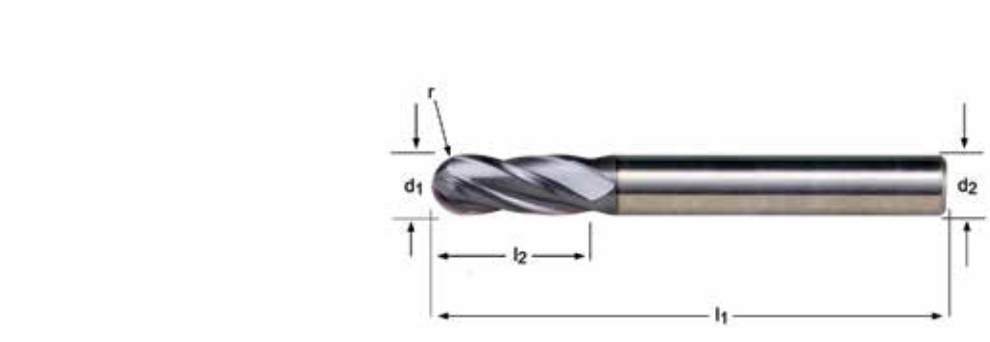

S511

3.00 - 16.00

d_1 Ø mm	r ±0.01 mm	d_2 Øh_6 mm	l_2 mm	l_1 mm	z	S511
3.00	1.50	6	8	80	4	S5113.0
4.00	2.00	6	11	80	4	S5114.0
5.00	2.50	6	13	80	4	S5115.0
6.00	3.00	6	13	80	4	S5116.0
7.00	3.50	8	16	100	4	S5117.0
8.00	4.00	8	19	100	4	S5118.0
9.00	4.50	10	19	100	4	S5119.0
10.00	5.00	10	22	100	4	S51110.0
12.00	6.00	12	26	100	4	S51112.0
16.00	8.00	16	32	100	4	S51116.0

S629

- 球头立铣刀
- Fresa de topo esférico
- Fresas con punta esferica
- Ball-Nosed End Mill

S629 ▪ 6.1 6.2 6.3 6.4 7.1 7.2 7.3 7.4 8.1 8.2

S629 HM W Z 2 λ30° γ15° DIN 6535HA Hi h9 DORMER

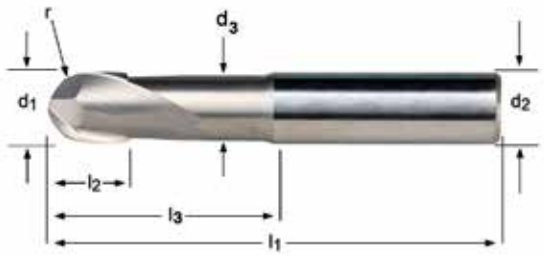

S629

3.00 - 20.00

d_1 Ø mm	r +0/-0.02 mm	d_2 Ø mm	l_2 mm	l_1 mm	z	l_3 mm	d_3 Ø mm	S629
3.00	1.50	6	5	57	2	20.0	2.8	S6293.0
4.00	2.00	6	6	57	2	20.0	3.7	S6294.0
5.00	2.50	6	7	57	2	20.0	4.6	S6295.0
6.00	3.00	6	8	57	2	20.0	5.5	S6296.0
8.00	4.00	8	10	64	2	25.0	7.4	S6298.0
10.00	5.00	10	12	75	2	35.0	9.2	S62910.0
12.00	6.00	12	14	75	2	35.0	11.0	S62912.0
16.00	8.00	16	18	90	2	45.0	15.0	S62916.0
20.00	10.00	20	22	100	2	50.0	19.0	S62920.0

S739

- 倒角立铣刀-60度
- Fresa de chanfro - 60°
- Fresas de achaflanar - 60º
- Chamfering End Mill - 60°

S740

- 倒角立铣刀-90度
- Fresa de chanfro - 90°
- Fresas de achaflanar - 90º
- Chamfering End Mill - 90°

S741

- 倒角立铣刀-120度
- Fresa de chanfro - 120°
- Fresas de achaflanar - 120º
- Chamfering End Mill - 120°

S739; S740; S741 ▪ 1.1 1.2 1.3 1.4 1.5 2.1 2.2 3.1 3.2 3.3 3.4 4.2 5.2 6.1 6.2 6.3 6.4 7.1 7.2 7.3 7.4

S739	HM		N	Z 2		λ40° γ10°	DIN 6535HA	AlTiN	h9		DORMER
S740	HM		N	Z 2		λ40° γ10°	DIN 6535HA	AlTiN	h9		DORMER
S741	HM		N	Z 2		λ40° γ10°	DIN 6535HA	AlTiN	h9		DORMER

S739	S740	S741
		
3.00 - 20.00	3.00 - 20.00	3.00 - 20.00

▷	d_1 Ø mm	d_2 Øh_6 mm	l_2 mm	l_1 mm	z	S739	S740	S741
60°	3.00	3	9	40	2	S7393.0		
90°	3.00	3	9	40	2		S7403.0	
120°	3.00	3	9	40	2			S7413.0
60°	4.00	4	12	50	2	S7394.0		
90°	4.00	4	12	50	2		S7404.0	
120°	4.00	4	12	50	2			S7414.0
60°	5.00	5	15	50	2	S7395.0		
90°	5.00	5	15	50	2		S7405.0	
120°	5.00	5	15	50	2			S7415.0
60°	6.00	6	16	50	2	S7396.0		
90°	6.00	6	16	50	2		S7406.0	
120°	6.00	6	16	50	2			S7416.0
60°	8.00	8	20	64	2	S7398.0		
90°	8.00	8	20	64	2		S7408.0	
120°	8.00	8	20	64	2			S7418.0
60°	10.00	10	22	70	2	S73910.0		
90°	10.00	10	22	70	2		S74010.0	
120°	10.00	10	22	70	2			S74110.0

▷	d_1 Ø mm	d_2 Øh_6 mm	l_2 mm	l_1 mm	z	S739	S740	S741
60°	12.00	12	25	75	2	S73912.0		
90°	12.00	12	25	75	2		S74012.0	
120°	12.00	12	25	75	2			S74112.0
60°	16.00	16	32	90	2	S73916.0		
90°	16.00	16	32	90	2		S74016.0	
120°	16.00	16	32	90	2			S74116.0
60°	20.00	20	38	100	2	S73920.0		
90°	20.00	20	38	100	2		S74020.0	
120°	20.00	20	38	100	2			S74120.0

S991

- 套装整体硬质合金铣刀
- Jogo de Fresa de Topo
- Juego de fresas de acabado
- Solid Carbide Cutter Set

A=套件中的规格, B=套件中的数量, C=套件中的直径
A=Tipos no jogo B=N° eno jogo C=Diâmetros no jogo
A=Tipos en el juego, B=No. en el Juego, C=Diámetros en el Juego
A=Styles in Set, B=No. in Set, C=Diameters in Set

S991

Set

Nr.	A	B	C	S991
922	S922	6	Ø 3.00 mm, 4.00 mm, 5.00 mm, 6.00 mm, 8.00 mm, 10.00 mm	S991SET922
933	S933	6	Ø 3.00 mm, 4.00 mm, 5.00 mm, 6.00 mm, 8.00 mm, 10.00 mm	S991SET933
944	S944	6	Ø 3.00 mm, 4.00 mm, 5.00 mm, 6.00 mm, 8.00 mm, 10.00 mm	S991SET944

C110
C126

- 钻铣刀
- Fresa de topo para canais
- Fresas de ranurar
- Slot Drill

C110	▪	1.1 1.2 4.1 5.1 6.1 6.2 6.3
	•	1.3 1.4 2.1 3.1 3.2 3.3 3.4 4.2 5.2 7.1 7.2 7.3 8.1
C126	▪	1.1 1.2 1.3 1.4 3.1 3.2 3.3 3.4 4.1 4.2 5.1 5.2 6.1 6.2 6.3
	•	1.5 1.6 2.1 2.3 4.3 5.3 6.4 7.1 7.2 7.3 7.4 8.1

C110	HSS-E PM	P9	N	Z 2		λ30° γ12°	DIN 1835B		e8		DIN 327D
C126	HSS-E PM	P9	N	Z 2		λ30° γ12°	DIN 1835B	TiCN	e8		DIN 327D

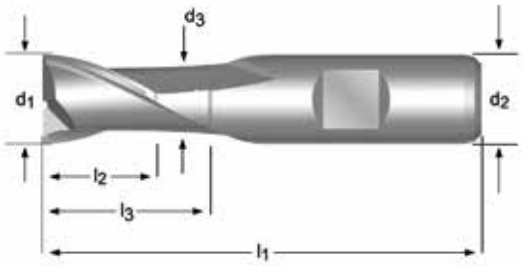

C110	C126
	
1.00 - 50.00	1.00 - 30.00

d_1 Ø Inch	d_1 Ø mm	d_2 Øh_6 mm	l_2 mm	l_1 mm	z	l_3 mm	d_3 Ø mm	C110	C126
	1.00	6	2.5	47	2	-	-	C1101.0	C1261.0
	1.50	6	3	47	2	-	-	C1101.5	C1261.5
1/16	1.59	6	3	47	2	-	-	C1101/16	
	1.80	6	4	48	2	-	-	C1101.8	
	2.00	6	4	48	2	-	-	C1102.0	C1262.0
3/32	2.38	6	5	49	2	-	-	C1103/32	
	2.50	6	5	49	2	-	-	C1102.5	C1262.5
	2.80	6	5	49	2	-	-	C1102.8	
	3.00	6	5	49	2	-	-	C1103.0	C1263.0
1/8	3.18	6	6	50	2	-	-	C1101/8	
	3.50	6	6	50	2	-	-	C1103.5	C1263.5
	3.80	6	7	51	2	-	-	C1103.8	
	4.00	6	7	51	2	-	-	C1104.0	C1264.0
	4.50	6	7	51	2	-	-	C1104.5	C1264.5
3/16	4.76	6	8	52	2	-	-	C1103/16	
	4.80	6	8	52	2	-	-	C1104.8 [1)2)]	
	5.00	6	8	52	2	-	-	C1105.0	C1265.0
	5.50	6	8	52	2	-	-	C1105.5	C1265.5
	5.75	6	8	52	2	-	-	C1105.75 [1)2)]	
	6.00	6	8	52	2	-	-	C1106.0	C1266.0
1/4	6.35	10	10	60	2	-	-	C1101/4	
	6.50	10	10	60	2	-	-	C1106.5	C1266.5
	6.75	10	10	60	2	-	-	C1106.75	
	7.00	10	10	60	2	-	-	C1107.0	C1267.0
	7.50	10	10	60	2	-	-	C1107.5	C1267.5
	7.75	10	11	61	2	-	-	C1107.75 [1)2)]	
5/16	7.94	10	11	61	2	-	-	C1105/16	
	8.00	10	11	61	2	-	-	C1108.0	C1268.0

[1)] 直径公差: h10 / Tolerância do Diâmetro h10 / Tolerancia diámetro h10 / diameter tolerance h10
[2)] 公差P9的二刃立铣刀 / ≠ P9 tolerância / ≠ P9 / slot not in P9 tolerance

d_1 Ø Inch	d_1 Ø mm	d_2 Øh_6 mm	l_2 mm	l_1 mm	z	l_3 mm	d_3 Ø mm	C110	C126
	8.50	10	11	61	2	-	-	C1108.5	C1268.5
	9.00	10	11	61	2	-	-	C1109.0	C1269.0
	9.50	10	11	61	2	-	-	C1109.5	C1269.5
3/8	9.52	10	13	63	2	22.5	9.5	C1103/8	
	9.70	10	13	63	2	22.5	9.5	C1109.7 [1)2)]	
	10.00	10	13	63	2	22.5	9.5	C11010.0	C12610.0
13/32	10.32	12	13	70	2	-	-	C11013/32	
	10.50	12	13	70	2	-	-	C11010.5	C12610.5
	11.00	12	13	70	2	-	-	C11011.0	C12611.0
7/16	11.11	12	13	70	2	-	-	C1107/16	
	11.50	12	13	70	2	-	-	C11011.5	C12611.5
	11.70	12	16	73	2	27.5	11.5	C11011.7 [1)2)]	
	12.00	12	16	73	2	27.5	11.5	C11012.0	C12612.0
	12.50	12	16	73	2	27.5	11.5	C11012.5	C12612.5
1/2	12.70	12	16	73	2	27.5	11.5	C1101/2	
	13.00	12	16	73	2	27.5	11.5	C11013.0	C12613.0
17/32	13.49	12	16	73	2	27.5	11.5	C11017/32	
	13.70	12	16	73	2	27.5	11.5	C11013.7 [1)2)]	
	14.00	12	16	73	2	27.5	11.5	C11014.0	C12614.0
9/16	14.29	12	16	73	2	27.5	11.5	C1109/16	
	15.00	12	16	73	2	27.5	11.5	C11015.0	C12615.0
	15.70	16	19	79	2	30.5	15.5	C11015.7 [1)2)]	
5/8	15.88	16	19	79	2	30.5	15.5	C1105/8	
	16.00	16	19	79	2	30.5	15.5	C11016.0	C12616.0
	17.00	16	19	79	2	30.5	15.5	C11017.0	
11/16	17.46	16	19	79	2	30.5	15.5	C11011/16	
	17.70	16	19	79	2	30.5	15.5	C11017.7	
	18.00	16	19	79	2	30.5	15.5	C11018.0	C12618.0
	19.00	16	19	79	2	30.5	15.5	C11019.0	
3/4	19.05	20	22	88	2	37.5	18.5	C1103/4	
	19.70	20	22	88	2	37.5	19.5	C11019.7	
	20.00	20	22	88	2	37.5	19.5	C11020.0	C12620.0
	21.70	20	22	88	2	37.5	19.5	C11021.7	
	22.00	20	22	88	2	37.5	19.5	C11022.0	C12622.0
7/8	22.22	20	22	88	2	37.5	19.5	C1107/8	
	24.00	25	26	102	2	45.5	23.5	C11024.0	C12624.0
	24.70	25	26	102	2	45.5	24.5	C11024.7	
	25.00	25	26	102	2	45.5	24.5	C11025.0	C12625.0
1“	25.40	25	26	102	2	45.5	24.5	C1101	
	26.00	25	26	102	2	45.5	24.5	C11026.0	
	28.00	25	26	102	2	45.5	24.5	C11028.0	
1.1/8	28.58	25	26	102	2	45.5	24.5	C1101.1/8	
	30.00	25	26	102	2	45.5	24.5	C11030.0	C12630.0
1.1/4	31.75	32	32	112	2	51.5	31.5	C1101.1/4	
	32.00	32	32	112	2	51.5	31.5	C11032.0	
	35.00	32	32	112	2	51.5	31.5	C11035.0 [1)3)]	
	36.00	32	32	112	2	51.5	31.5	C11036.0 [1)3)]	
	40.00	40	38	130	2	59.5	39.0	C11040.0 [1)3)]	
	45.00	40	38	130	2	59.5	38.0	C11045.0 [1)3)]	
	50.00	50	45	147	2	66.5	48.0	C11050.0 [1)3)]	

[1)] 直径公差: h10 / Tolerância do Diâmetro h10 / Tolerancia diámetro h10 / diameter tolerance h10
[2)] 公差P9的二刃立铣刀 / ≠ P9 tolerância / ≠ P9 / slot not in P9 tolerance
[3)] 只能提供 HSCo 产品 / Disponível apenas em HSCo / Disponible solo en HSCo / Available in HSS-E only

C123
C139

- 钻铣刀
- Fresa de topo para canais
- Fresas de ranurar
- Slot Drill

C123	▪	1.1 1.2 1.3 1.4 4.1 5.1 6.1 6.2 6.3
	•	2.1 3.1 3.2 3.3 3.4 4.2 5.2 7.1 7.2 7.3 8.1
C139	▪	1.1 1.2 1.3 1.4 3.1 3.2 3.3 3.4 4.1 4.2 5.1 5.2 6.1 6.2 6.3
	•	1.5 1.6 2.1 2.3 4.3 5.3 6.4 7.1 7.2 7.3 7.4 8.1

C123	HSS-E PM	P9	N	Z 2		λ30° γ12°	DIN 1835B		e8		DIN 844K
C139	HSS-E PM	P9	N	Z 2		λ30° γ12°	DIN 1835B	TiCN	e8		DIN 844K

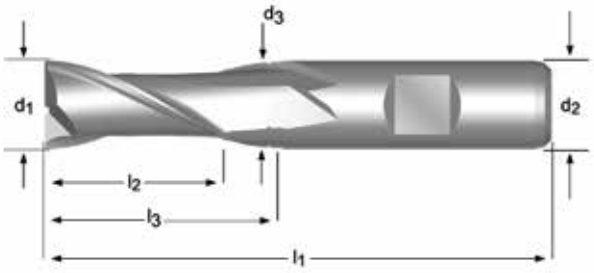

C123	C139
	
1/16 - 40.00	2.00 - 30.00

d_1 Ø Inch	d_1 Ø mm	d_2 Øh_6 mm	l_2 mm	l_1 mm	z	l_3 mm	d_3 Ø mm	C123	C139
1/16	1.59	6	7	51	2	-	-	C1231/16 [1]	
	2.00	6	7	51	2	-	-	C1232.0	C1392.0
	2.50	6	8	52	2	-	-	C1232.5	
	3.00	6	8	52	2	-	-	C1233.0	C1393.0
1/8	3.18	6	10	54	2	-	-	C1231/8 [1]	
	3.50	6	10	54	2	-	-	C1233.5	
5/32	3.97	6	11	55	2	-	-	C1235/32 [1]	
	4.00	6	11	55	2	-	-	C1234.0	C1394.0
	4.50	6	11	55	2	-	-	C1234.5	
3/16	4.76	6	13	57	2	-	-	C1233/16 [1]	
	5.00	6	13	57	2	-	-	C1235.0	C1395.0
	5.50	6	13	57	2	-	-	C1235.5	C1395.5
	6.00	6	13	57	2	-	-	C1236.0	C1396.0
1/4	6.35	10	16	66	2	-	-	C1231/4 [1]	
	6.50	10	16	66	2	-	-	C1236.5	C1396.5
	7.00	10	16	66	2	-	-	C1237.0	C1397.0
	7.50	10	16	66	2	-	-	C1237.5	C1397.5
5/16	7.94	10	19	69	2	-	-	C1235/16 [1]	
	8.00	10	19	69	2	-	-	C1238.0	C1398.0
	8.50	10	19	69	2	-	-	C1238.5	C1398.5
	9.00	10	19	69	2	-	-	C1239.0	C1399.0
	9.50	10	19	69	2	-	-	C1239.5	C1399.5
3/8	9.52	10	22	72	2	31.5	9.5	C1233/8 [1]	
	10.00	10	22	72	2	31.5	9.5	C12310.0	C13910.0
	11.00	12	22	79	2	-	-	C12311.0	C13911.0
	12.00	12	26	83	2	37.5	11.5	C12312.0	C13912.0
1/2	12.70	12	26	83	2	37.5	11.5	C1231/2 [1]	
	13.00	12	26	83	2	37.5	11.5	C12313.0	C13913.0
	14.00	12	26	83	2	37.5	11.5	C12314.0	C13914.0
9/16	14.29	12	26	83	2	37.5	11.5	C1239/16 [1]	

[1] 直径公差: - 0.0005 英寸/ - 0.0013 英寸 / tolerância do diâmetro -0.0005 polegadas / -0.0013 polegadas / Tolerancia diámetro -.0005 pulgadas/ -.0013 pulgadas / diameter tolerance -0.0005 inches / -0.0013 inches

d_1 Ø Inch	d_1 Ø mm	d_2 Øh_6 mm	l_2 mm	l_1 mm	z	l_3 mm	d_3 Ø mm	C123	C139
	15.00	12	26	83	2	37.5	11.5	C12315.0	C13915.0
5/8	15.88	16	32	92	2	43.5	15.5	C1235/8 [1)]	
	16.00	16	32	92	2	43.5	15.5	C12316.0	C13916.0
	18.00	16	32	92	2	43.5	15.5	C12318.0	C13918.0
3/4	19.05	20	38	104	2	53.5	18.5	C1233/4 [2)]	
	20.00	20	38	104	2	53.5	19.5	C12320.0	C13920.0
	22.00	20	38	104	2	53.5	19.5	C12322.0	C13922.0
	25.00	25	45	121	2	64.5	24.5	C12325.0	C13925.0
1“	25.40	25	45	121	2	64.5	24.5	C1231	
	30.00	25	45	121	2	64.5	24.5	C12330.0	C13930.0
	32.00	32	53	133	2	72.5	31.5	C12332.0	
	36.00	32	53	133	2	72.5	31.5	C12336.0 [3)]	
	40.00	40	63	155	2	84.5	39.0	C12340.0 [3)]	

C135

- 钻铣刀
- Fresa de topo para canais
- Fresas de ranurar
- Slot Drill

C135															
	■	1.1	1.2	5.1	6.1	6.2	6.3								
	•	1.3	1.4	2.1	3.1	3.2	3.3	3.4	4.1	4.2	5.2	7.1	7.2	7.3	8.1

C135 HSS-E P9 N Z 2 λ30° γ12° DIN 1835B e8 DORMER

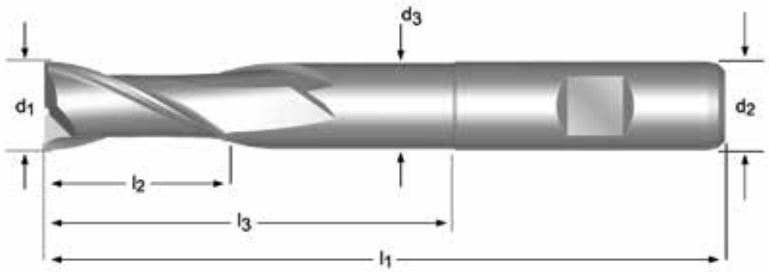

C135

2.00 - 20.00

d_1 Ø mm	d_2 Øh_6 mm	l_2 mm	l_1 mm	z	l_3 mm	d_3 Ø mm	C135
2.00	6	7	54	2	18.0	1.8	C1352.0
3.00	6	8	56	2	20.0	2.8	C1353.0
4.00	6	11	63	2	27.0	3.7	C1354.0
5.00	6	13	68	2	32.0	4.7	C1355.0
6.00	6	13	68	2	32.0	5.7	C1356.0
7.00	10	16	80	2	40.0	6.5	C1357.0
8.00	10	19	88	2	48.0	7.5	C1358.0
9.00	10	19	88	2	48.0	8.5	C1359.0
10.00	10	22	95	2	54.5	9.5	C13510.0
11.00	12	22	102	2	57.0	10.5	C13511.0
12.00	12	26	110	2	64.5	11.5	C13512.0
13.00	12	26	110	2	64.5	11.5	C13513.0
14.00	12	26	110	2	64.5	11.5	C13514.0
15.00	12	26	110	2	64.5	11.5	C13515.0
16.00	16	32	123	2	74.5	15.5	C13516.0
17.00	16	32	123	2	74.5	15.5	C13517.0
18.00	16	32	123	2	74.5	15.5	C13518.0
19.00	16	32	123	2	74.5	15.5	C13519.0
20.00	20	38	141	2	90.5	19.5	C13520.0

C306
C353

- 钻铣刀
- Fresa de topo para canais
- Fresas de ranurar
- Slot Drill

C306	▪	1.2 1.3 4.1 5.1 6.1 6.2 6.3
	•	1.1 1.4 2.1 3.1 3.2 3.3 3.4 4.2 5.2 7.2 7.3 8.1
C353	▪	1.2 1.3 1.4 1.5 3.1 3.2 3.3 3.4 4.1 4.2 5.1 5.2 6.1 6.2 6.3
	•	1.1 1.6 2.1 2.2 2.3 4.3 5.3 6.4 7.2 7.3 7.4 8.1

C306	HSS-E PM	P9	N	Z 3		λ30° γ12°	DIN 1835B		e8 h10		DIN 327D
C353	HSS-E PM	P9	N	Z 3		λ30° γ12°	DIN 1835B	Alcrona	e8 h10		DIN 327D

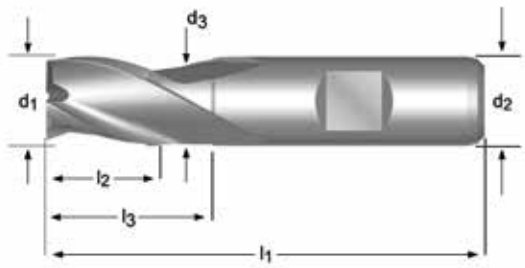

C306	C353
	
3.00 - 30.00	3.00 - 30.00

d_1 Ø mm	d_2 Øh_6 mm	l_2 mm	l_1 mm	z	l_3 mm	d_3 Ø mm	C306	C353
3.00	6	5	49	3	-	-	C3063.0	C3533.0
3.50	6	6	50	3	-	-	C3063.5	C3533.5
4.00	6	7	51	3	-	-	C3064.0	C3534.0
4.50	6	7	51	3	-	-	C3064.5	C3534.5
4.80	6	8	52	3	-	-	C3064.8	C3534.8
5.00	6	8	52	3	-	-	C3065.0	C3535.0
5.50	6	8	52	3	-	-	C3065.5	C3535.5
5.75	6	8	52	3	-	-	C3065.75	C3535.75
6.00	6	8	52	3	-	-	C3066.0	C3536.0
6.50	10	10	60	3	-	-	C3066.5	C3536.5
7.00	10	10	60	3	-	-	C3067.0	C3537.0
7.50	10	10	60	3	-	-	C3067.5	C3537.5
7.75	10	11	61	3	-	-	C3067.75	C3537.75
8.00	10	11	61	3	-	-	C3068.0	C3538.0
8.50	10	11	61	3	-	-	C3068.5	C3538.5
9.00	10	11	61	3	-	-	C3069.0	C3539.0
9.50	10	11	61	3	-	-	C3069.5	C3539.5
9.70	10	13	63	3	22.5	9.5		C3539.7
10.00	10	13	63	3	22.5	9.5	C30610.0	C35310.0
11.00	12	13	70	3	-	-	C30611.0	C35311.0
12.00	12	16	73	3	27.5	11.5	C30612.0	C35312.0
13.00	12	16	73	3	27.5	11.5	C30613.0	C35313.0
14.00	12	16	73	3	27.5	11.5	C30614.0	C35314.0
15.00	12	16	73	3	27.5	11.5	C30615.0	C35315.0
16.00	16	19	79	3	30.5	15.5	C30616.0	C35316.0
18.00	16	19	79	3	30.5	15.5	C30618.0	C35318.0
20.00	20	22	88	3	37.5	19.5	C30620.0	C35320.0
22.00	20	22	88	3	37.5	19.5	C30622.0	C35322.0
25.00	25	26	102	3	45.5	24.5	C30625.0	C35325.0
28.00	25	26	102	3	45.5	24.5	C30628.0	C35328.0
30.00	25	26	102	3	45.5	24.5	C30630.0	C35330.0

C367

- 钻铣刀
- Fresa de topo para canais
- Fresas de ranurar
- Slot Drill

C367										
	▪	1.1	1.2	2.1	2.2	2.3	2.4	6.1	7.1	
	•	1.3	1.4	4.1	5.1	6.2	6.3	7.2	7.3	8.1

C367 HSS-E PM | P9 | N | Z 3 | λ40° γ15° | DIN 1835B | Alcrona | e8 | DIN 327D

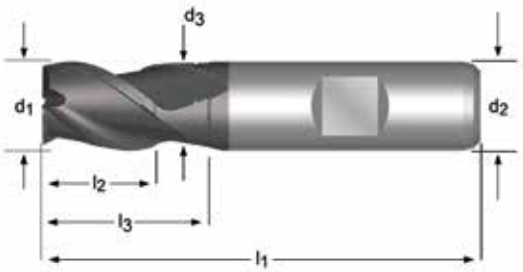

C367

2.00 - 20.00

d_1 Ø mm	d_2 Øh_6 mm	l_2 mm	l_1 mm	z	l_3 mm	d_3 Ø mm	C367
2.00	6	4	48	3	-	-	C3672.0
3.00	6	5	49	3	-	-	C3673.0
4.00	6	7	51	3	-	-	C3674.0
5.00	6	8	52	3	-	-	C3675.0
6.00	6	8	52	3	-	-	C3676.0
7.00	10	10	60	3	-	-	C3677.0
8.00	10	11	61	3	-	-	C3678.0
9.00	10	11	61	3	-	-	C3679.0
10.00	10	13	63	3	22.5	9.5	C36710.0
11.00	12	13	70	3	-	-	C36711.0
12.00	12	16	73	3	27.5	11.5	C36712.0
13.00	12	16	73	3	27.5	11.5	C36713.0
14.00	12	16	73	3	27.5	11.5	C36714.0
16.00	16	19	79	3	30.5	15.5	C36716.0
18.00	16	19	79	3	30.5	15.5	C36718.0
20.00	20	22	88	3	37.5	19.5	C36720.0

C305
C352

- 钻铣刀
- Fresa de topo para canais
- Fresas de ranurar
- Slot Drill

C305	▪	1.2 1.3 4.1 5.1 5.2 6.1 6.2 6.3
	•	1.1 1.4 2.1 3.1 3.2 3.3 3.4 4.2 7.2 7.3 8.1
C352	▪	1.2 1.3 1.4 1.5 3.1 3.2 3.3 3.4 4.1 4.2 5.1 5.2 6.1 6.2 6.3
	•	1.1 1.6 2.1 2.2 2.3 4.3 5.3 6.4 7.2 7.3 7.4 8.1

C305	HSS-E PM	P9	N	Z 3		λ30° γ12°	DIN 1835B		e8		DIN 844K
C352	HSS-E PM	P9	N	Z 3		λ30° γ12°	DIN 1835B	Alcrona	e8		DIN 844K

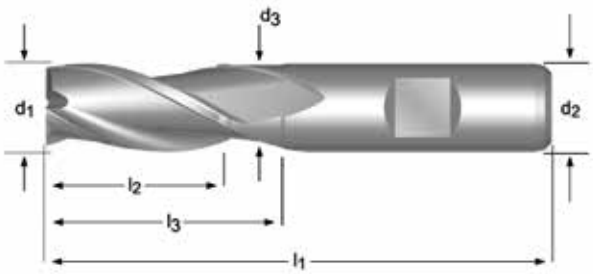

C305	C352
	
2.00 - 32.00	3.00 - 20.00

d_1 Ø mm	d_2 Øh_6 mm	l_2 mm	l_1 mm	z	l_3 mm	d_3 Ø mm	C305	C352
2.00	6	7	51	3	-	-	C3052.0	
2.50	6	8	52	3	-	-	C3052.5	
3.00	6	8	52	3	-	-	C3053.0	C3523.0
3.50	6	10	54	3	-	-	C3053.5	
4.00	6	11	55	3	-	-	C3054.0	C3524.0
4.50	6	11	55	3	-	-	C3054.5	
5.00	6	13	57	3	-	-	C3055.0	C3525.0
5.50	6	13	57	3	-	-	C3055.5	
6.00	6	13	57	3	-	-	C3056.0	C3526.0
6.50	10	16	66	3	-	-	C3056.5	
7.00	10	16	66	3	-	-	C3057.0	
7.50	10	16	66	3	-	-	C3057.5	
8.00	10	19	69	3	-	-	C3058.0	C3528.0
8.50	10	19	69	3	-	-	C3058.5	
9.00	10	19	69	3	-	-	C3059.0	
10.00	10	22	72	3	31.5	9.5	C30510.0	C35210.0
11.00	12	22	79	3	-	-	C30511.0	
12.00	12	26	83	3	37.5	11.5	C30512.0	C35212.0
13.00	12	26	83	3	37.5	11.5	C30513.0	
14.00	12	26	83	3	37.5	11.5	C30514.0	C35214.0
15.00	12	26	83	3	37.5	11.5	C30515.0	
16.00	16	32	92	3	43.5	15.5	C30516.0	C35216.0
17.00	16	32	92	3	43.5	15.5	C30517.0	
18.00	16	32	92	3	43.5	15.5	C30518.0	C35218.0
19.00	16	32	92	3	43.5	15.5	C30519.0	
20.00	20	38	104	3	53.5	19.5	C30520.0	C35220.0
22.00	20	38	104	3	53.5	19.5	C30522.0	
25.00	25	45	121	3	-	-	C30525.0	
28.00	25	45	121	3	-	-	C30528.0	
30.00	25	45	121	3	-	-	C30530.0	
32.00	32	53	133	3	-	-	C30532.0	

C159
C169

- 钻铣刀
- Fresa de topo para canais
- Fresas de ranurar
- Slot Drill

C159	■	1.1 6.1 6.2 6.3 7.1 7.2 7.3 8.1 8.2
	•	1.2 1.3 2.1 2.2 4.1 5.1
C169	■	1.1 1.2 6.1 6.2 6.3 7.1 7.2 7.3 8.1 8.2
	•	1.3 2.1 2.2 2.3 4.1 4.2 5.1 5.2

C159	HSS-E	P9	W	Z 2		λ40° γ20°	DIN 1835B		e8		DIN 844K
C169	HSS-E	P9	W	Z 2		λ40° γ20°	DIN 1835B	TiCN	e8		DIN 844K

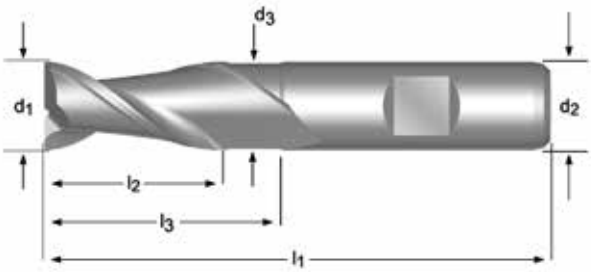

C159	C169
	
2.00 - 20.00	2.00 - 12.00

d_1 Ø mm	d_2 Øh_6 mm	l_2 mm	l_1 mm	z	l_3 mm	d_3 Ø mm	C159	C169
2.00	6	7	51	2	-	-	C1592.0	C1692.0
3.00	6	8	52	2	-	-	C1593.0	C1693.0
4.00	6	11	55	2	-	-	C1594.0	C1694.0
5.00	6	13	57	2	-	-	C1595.0	C1695.0
6.00	6	13	57	2	-	-	C1596.0	C1696.0
8.00	10	19	69	2	-	-	C1598.0	C1698.0
10.00	10	22	72	2	-	-	C15910.0	C16910.0
12.00	12	26	83	2	-	-	C15912.0	C16912.0
14.00	12	26	83	2	37.5	11.5	C15914.0	
16.00	16	32	92	2	43.5	15.5	C15916.0	
18.00	16	32	92	2	43.5	15.5	C15918.0	
20.00	20	38	104	2	53.5	19.5	C15920.0	

C336
C358

- 立铣刀
- Fresa de Topo
- Fresas de acabado
- End Mill

C336	▪	6.1	6.2	6.3	7.1	7.2	7.3	8.1	8.2		
	•	1.1	1.2	1.3	2.1	2.2	4.1	5.1			
C358	▪	1.2	6.1	6.2	6.3	7.1	7.2	7.3	7.4	8.1	8.2
	•	1.1	1.3	2.1	2.2	2.3	4.1	4.2	5.1	5.2	

C336	HSS-E PM		W	Z 3		λ40° γ25°	DIN 1835B		k10		DIN 844K
C358	HSS-E PM		W	Z 3		λ40° γ25°	DIN 1835B	Alcrona	k10		DIN 844K

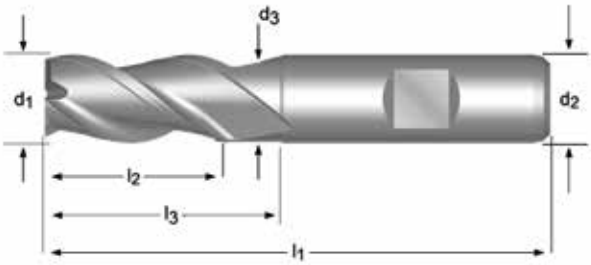

C336	C358
	
10.00 - 30.00	10.00 - 30.00

d_1 Ø mm	d_2 Øh_6 mm	l_2 mm	l_1 mm	z	l_3 mm	d_3 Ø mm	C336	C358
10.00	10	22	72	3	31.5	9.5	C33610.0	C35810.0
12.00	12	26	83	3	37.5	11.5	C33612.0	C35812.0
14.00	12	26	83	3	37.5	11.5	C33614.0	C35814.0
16.00	16	32	92	3	43.5	15.5	C33616.0	C35816.0
18.00	16	32	92	3	43.5	15.5	C33618.0	C35818.0
20.00	20	38	104	3	53.5	19.5	C33620.0	C35820.0
22.00	20	38	104	3	53.5	19.5	C33622.0	C35822.0
25.00	25	45	121	3	64.5	24.5	C33625.0	C35825.0
30.00	25	45	121	3	64.5	24.5	C33630.0	C35830.0

C167

- 立铣刀
- Fresa de Topo
- Fresas de acabado
- End Mill

C167															
	▪	1.1	1.2	5.1	6.1	6.2	6.3								
	•	1.3	1.4	2.1	3.1	3.2	3.3	3.4	4.1	4.2	5.2	7.1	7.2	7.3	8.1

C167 HSS-E N Z 2 λ30° γ12° DIN 1835A js14 DORMER

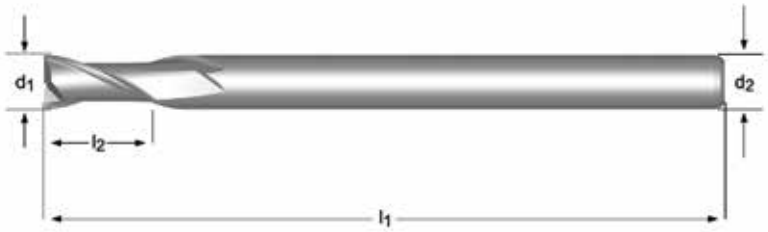

C167

6.00 - 16.00

d_1 Ø mm	d_2 Øh_6 mm	l_2 mm	l_1 mm	z	C167
6.00	6	13	180	2	C1676.0
8.00	8	19	180	2	C1678.0
10.00	10	22	200	2	C16710.0
12.00	12	26	200	2	C16712.0
16.00	16	32	200	2	C16716.0

C122

- 立铣刀
- Fresa de Topo
- Fresas de acabado
- End Mill

C122															
	▪	1.1	1.2	5.1	6.1	6.2	6.3								
	•	1.3	1.4	2.1	3.1	3.2	3.3	3.4	4.1	4.2	5.2	7.1	7.2	7.3	8.1

C122 HSS-E N Z 2 λ30° γ12° DIN 1835A e8 DORMER

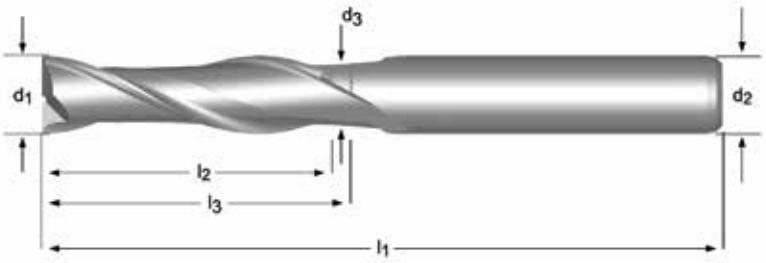

C122

5.00 - 30.00

d_1 Ø mm	d_2 Øh_6 mm	l_2 mm	l_1 mm	z	l_3 mm	d_3 Ø mm	C122
5.00	5	22	65	2	-	-	C1225.0
6.00	6	27	75	2	-	-	C1226.0
7.00	8	33	85	2	-	-	C1227.0
8.00	8	33	85	2	-	-	C1228.0
10.00	10	40	95	2	-	-	C12210.0
12.00	12	45	110	2	-	-	C12212.0
14.00	12	52	125	2	-	-	C12214.0
16.00	16	58	140	2	69.5	15.5	C12216.0
18.00	16	65	150	2	76.5	15.5	C12218.0
20.00	20	70	160	2	85.5	19.5	C12220.0
22.00	20	75	170	2	90.5	19.5	C12222.0
25.00	25	82	185	2	101.5	24.5	C12225.0
30.00	25	90	205	2	109.5	24.5	C12230.0

DORMER

C346

- 立铣刀
- Fresa de Topo
- Fresas de acabado
- End Mill

C346		
	■	1.2 4.1 5.1 6.1 6.2 6.3
	•	1.1 1.3 1.4 2.1 3.1 3.2 3.3 3.4 4.2 5.2 7.1 7.2 8.1

C346 HSS-E N Z 3 λ30° γ12° DIN 1835B e8 DIN 844L

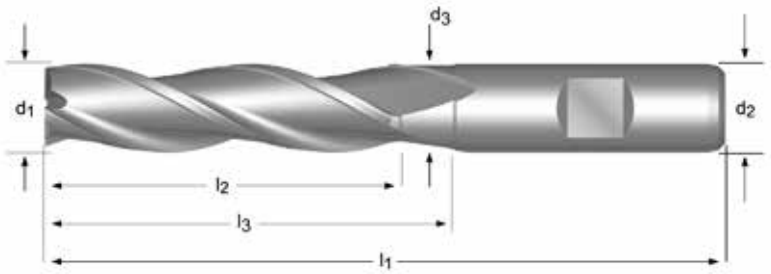

C346

3.00 - 20.00

d_1 Ø mm	d_2 Øh_6 mm	l_2 mm	l_1 mm	z	l_3 mm	d_3 Ø mm	C346
3.00	6	12	56	3	-	-	C3463.0
4.00	6	19	63	3	-	-	C3464.0
5.00	6	24	68	3	-	-	C3465.0
6.00	6	24	68	3	-	-	C3466.0
7.00	10	30	80	3	-	-	C3467.0
8.00	10	38	88	3	-	-	C3468.0
9.00	10	38	88	3	-	-	C3469.0
10.00	10	45	95	3	-	-	C34610.0
11.00	12	45	102	3	-	-	C34611.0
12.00	12	53	110	3	-	-	C34612.0
13.00	12	53	110	3	64.5	11.5	C34613.0
14.00	12	53	110	3	64.5	11.5	C34614.0
15.00	12	53	110	3	64.5	11.5	C34615.0
16.00	16	63	123	3	74.5	15.5	C34616.0
18.00	16	63	123	3	74.5	15.5	C34618.0
20.00	20	75	141	3	90.5	19.5	C34620.0

C299
C907

- 立铣刀
- Fresa de Topo
- Fresas de acabado
- End Mill

C299	■	1.3 1.4 1.5 2.1 2.3 3.1 3.2 3.3 3.4 4.2 4.3 5.1 5.2 5.3 6.2 7.4
	•	1.6 2.2 4.1
C907	■	1.3 1.4 1.5 1.6 2.1 2.2 2.3 3.1 3.2 3.3 3.4 4.2 4.3 5.1 5.2 5.3 6.2 7.4
	•	4.1

C299	HSS-E PM		N	Z 3-5		λ45° γ12°	DIN 1835B		k10		DIN 844K
C907	HSS-E PM		N	Z 3-6		λ45° γ12°	DIN 1835B	Alcrona	k10		DIN 844K

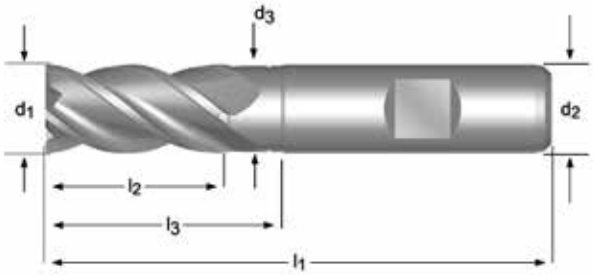

C299	C907
	
3.00 - 25.00	3.00 - 32.00

d_1 Ø mm	d_2 Øh_6 mm	l_2 mm	l_1 mm	z	l_3 mm	d_3 Ø mm	C299	C907
3.00	6	8	52	3	-	-	C2993.0	C9073.0
4.00	6	11	55	3	-	-	C2994.0	C9074.0
5.00	6	13	57	3	-	-	C2995.0	C9075.0
6.00	6	13	57	3	-	-	C2996.0	C9076.0
8.00	10	19	69	4	-	-	C2998.0	C9078.0
10.00	10	22	72	4	31.5	9.5	C29910.0	C90710.0
12.00	12	26	83	4	37.5	11.5	C29912.0	C90712.0
14.00	12	26	83	4	37.5	11.5	C29914.0	C90714.0
16.00	16	32	92	4	43.5	15.5	C29916.0	C90716.0
18.00	16	32	92	4	43.5	15.5	C29918.0	C90718.0
20.00	20	38	104	4	53.5	19.5	C29920.0	C90720.0
22.00	20	38	104	5	53.5	19.5		C90722.0
25.00	25	45	121	5	64.5	24.5	C29925.0	C90725.0
28.00	25	45	121	6	64.5	24.5		C90728.0
30.00	25	45	121	6	64.5	24.5		C90730.0
32.00	32	53	133	6	72.5	31.5		C90732.0

DORMER

C903
C920

- 立铣刀
- Fresa de Topo
- Fresas de acabado
- End Mill

C903	▪	1.3 1.4 1.5 2.1 2.3 3.1 3.2 3.3 3.4 4.2 4.3 5.1 5.2 5.3 6.2 7.4
	•	1.6 2.2 4.1
C920	▪	1.3 1.4 1.5 1.6 2.1 2.2 2.3 3.1 3.2 3.3 3.4 4.2 4.3 5.1 5.2 5.3 6.2 7.4
	•	4.1

C903	HSS-E PM		N	Z 3-5		λ45° γ12°	DIN 1835B		k10		DIN 844L
C920	HSS-E PM		N	Z 3-5		λ45° γ12°	DIN 1835B	Alcrona	k10		DIN 844L

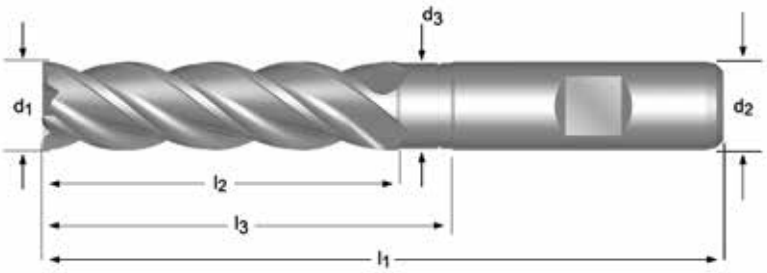

C903	C920
	
6.00 - 25.00	6.00 - 25.00

d_1 Ø mm	d_2 Øh_6 mm	l_2 mm	l_1 mm	z	l_3 mm	d_3 Ø mm	C903	C920
6.00	6	24	68	3	-	-	C9036.0	C9206.0
8.00	10	38	88	4	-	-	C9038.0	C9208.0
10.00	10	45	95	4	54.5	9.5	C90310.0	C92010.0
12.00	12	53	110	4	64.5	11.5	C90312.0	C92012.0
14.00	12	53	110	4	64.5	11.5	C90314.0	C92014.0
16.00	16	63	123	4	74.5	15.5	C90316.0	C92016.0
18.00	16	63	123	4	74.5	15.5		C92018.0
20.00	20	75	141	4	90.5	19.5	C90320.0	C92020.0
22.00	20	75	141	5	90.5	19.5		C92022.0
25.00	25	90	166	5	109.5	24.5		C92025.0

C247 / C246

- 立铣刀
- Fresa de Topo
- Fresas de acabado
- End Mill

C247	▪	1.1 1.2 1.3 4.1 5.1 6.1 6.2 6.3
	•	1.4 2.1 3.1 3.2 3.3 3.4 4.2 5.2 7.1 7.2 7.3 8.1
C246	▪	1.1 1.2 1.3 1.4 3.1 3.2 3.3 3.4 4.1 4.2 5.1 5.2 6.1 6.2 6.3
	•	1.5 1.6 2.1 2.3 4.3 5.3 6.4 7.1 7.2 7.3 7.4 8.1

C247	HSS-E PM		N	Z 4-8		λ30° γ12°	DIN 1835B		k10		DIN 844K
C246	HSS-E PM		N	Z 4-6		λ30° γ12°	DIN 1835B	TiCN	k10		DIN 844K

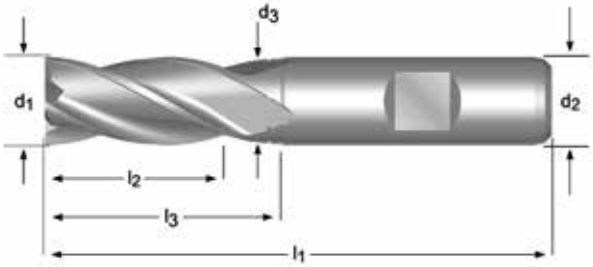

C247 — 2.00 - 50.00

C246 — 2.00 - 25.00

d_1 Ø Inch	d_1 Ø mm	d_2 Øh_6 mm	l_2 mm	l_1 mm	z	l_3 mm	d_3 Ø mm	C247	C246
	2.00	6	7	51	4	-	-	C2472.0	C2462.0
	2.50	6	8	52	4	-	-	C2472.5	
	3.00	6	8	52	4	-	-	C2473.0	C2463.0
1/8	3.18	6	10	54	4	-	-	C2471/8 [1]	
	3.50	6	10	54	4	-	-	C2473.5	
	4.00	6	11	55	4	-	-	C2474.0	C2464.0
	4.50	6	11	55	4	-	-	C2474.5	
3/16	4.76	6	13	57	4	-	-	C2473/16 [1]	
	5.00	6	13	57	4	-	-	C2475.0	C2465.0
	5.50	6	13	57	4	-	-	C2475.5	
	6.00	6	13	57	4	-	-	C2476.0	C2466.0
1/4	6.35	10	16	66	4	-	-	C2471/4 [1]	
	6.50	10	16	66	4	-	-	C2476.5	
	7.00	10	16	66	4	-	-	C2477.0	C2467.0
	7.50	10	16	66	4	-	-	C2477.5	
5/16	7.94	10	19	69	4	-	-	C2475/16 [1]	
	8.00	10	19	69	4	-	-	C2478.0	C2468.0
	8.50	10	19	69	4	-	-	C2478.5	
	9.00	10	19	69	4	-	-	C2479.0	
	9.50	10	19	69	4	-	-	C2479.5	
3/8	9.52	10	22	72	4	31.5	9.5	C2473/8 [1]	
	10.00	10	22	72	4	31.5	9.5	C24710.0	C24610.0
	11.00	12	22	79	4	-	-	C24711.0	C24611.0
	12.00	12	26	83	4	37.5	11.5	C24712.0	C24612.0
1/2	12.70	12	26	83	4	37.5	11.5	C2471/2 [1]	
	13.00	12	26	83	4	37.5	11.5	C24713.0	C24613.0
	14.00	12	26	83	4	37.5	11.5	C24714.0	C24614.0
9/16	14.29	12	26	83	4	37.5	11.5	C2479/16 [1]	
	15.00	12	26	83	4	37.5	11.5	C24715.0	C24615.0
5/8	15.88	16	32	92	4	43.5	15.5	C2475/8 [1]	

[1] 直径公差: + 0.0025 英寸/ - 0.0005 英寸 / tolerância do diâmetro +0.0025 polegadas / -0.0005 polegadas / Tolerancia diámetro + .0025 pulgadas/ -.0005 pulgadas / diameter tolerance +0.0025 inches / -0.0005 inches

d_1 Ø Inch	d_1 Ø mm	d_2 Øh_6 mm	l_2 mm	l_1 mm	z	l_3 mm	d_3 Ø mm	C247	C246
	16.00	16	32	92	4	43.5	15.5	C24716.0	C24616.0
	17.00	16	32	92	4	43.5	15.5	C24717.0	
	18.00	16	32	92	4	43.5	15.5	C24718.0	C24618.0
	19.00	16	32	92	4	43.5	15.5	C24719.0	
3/4	19.05	20	38	104	4	53.5	18.5	C2473/4 [1]	
	20.00	20	38	104	4	53.5	19.5	C24720.0	C24620.0
	21.00	20	38	104	4	53.5	19.5	C24721.0	
	22.00	20	38	104	5	53.5	19.5	C24722.0	C24622.0
7/8	22.22	20	38	104	5	53.5	19.5	C2477/8 [1]	
	23.00	20	38	104	5	53.5	19.5	C24723.0	
	24.00	25	45	121	5	64.5	23.5	C24724.0	
	25.00	25	45	121	5	64.5	24.5	C24725.0	C24625.0
1“	25.40	25	45	121	5	64.5	24.5	C2471 [1]	
	26.00	25	45	121	6	64.5	24.5	C24726.0	
	28.00	25	45	121	6	64.5	24.5	C24728.0	
	30.00	25	45	121	6	64.5	24.5	C24730.0	
	32.00	32	53	133	6	72.5	31.5	C24732.0	
	36.00	32	53	133	6	72.5	31.5	C24736.0 [2)3)]	
	40.00	40	63	155	6	84.5	39.0	C24740.0 [2)3)]	
	50.00	50	75	177	8	96.5	48.0	C24750.0 [2)3)]	

[1] 直径公差: + 0.0025 英寸/ - 0.0005 英寸 / tolerância do diâmetro +0.0025 polegadas / -0.0005 polegadas / Tolerancia diámetro + .0025 pulgadas/ -.0005 pulgadas / diameter tolerance +0.0025 inches / -0.0005 inches
[2] 无中心切削 / Sem corte no centro / Sin corte al centro / No centre Cutting
[3] 只能提供 HSCo 产品 / Disponível apenas em HSCo / Disponible solo en HSCo / Available in HSS-E only

C273
C295

- 立铣刀
- Fresa de Topo
- Fresas de acabado
- End Mill

C273	▪	1.1	1.2	1.3	4.1	5.1	6.1	6.2	6.3							
	•	1.4	2.1	3.1	3.2	3.3	3.4	4.2	5.2	7.1	7.2	7.3	8.1			
C295	▪	1.1	1.2	1.3	1.4	3.1	3.2	3.3	3.4	4.1	4.2	5.1	5.2	6.1	6.2	6.3
	•	1.5	1.6	2.1	2.3	4.3	5.3	6.4	7.1	7.2	7.3	7.4	8.1			

C273	HSS-E PM		N	Z 4-6		λ30° γ12°	DIN 1835B		k10		DIN 844L
C295	HSS-E PM		N	Z 4-6		λ30° γ12°	DIN 1835B	TiCN	k10		DIN 844L

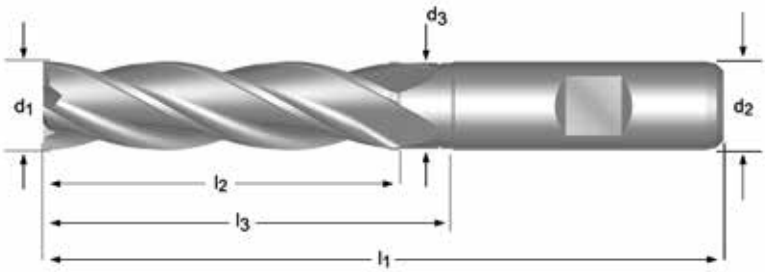

C273	C295
	
2.00 - 40.00	2.00 - 40.00

d_1 Ø Inch	d_1 Ø mm	d_2 Øh_6 mm	l_2 mm	l_1 mm	z	l_3 mm	d_3 Ø mm	C273	C295
	2.00	6	10	54	4	-	-	C2732.0	C2952.0
	2.50	6	12	56	4	-	-	C2732.5	
	3.00	6	12	56	4	-	-	C2733.0	C2953.0
1/8	3.18	6	15	59	4	-	-	C2731/8 [1]	
	3.50	6	15	59	4	-	-	C2733.5	
	4.00	6	19	63	4	-	-	C2734.0	C2954.0
	4.50	6	19	63	4	-	-	C2734.5	
3/16	4.76	6	24	68	4	-	-	C2733/16 [1]	
	5.00	6	24	68	4	-	-	C2735.0	C2955.0
	5.50	6	24	68	4	-	-	C2735.5	
	6.00	6	24	68	4	-	-	C2736.0	C2956.0
1/4	6.35	10	30	80	4	-	-	C2731/4 [1]	
	7.00	10	30	80	4	-	-	C2737.0	C2957.0
	8.00	10	38	88	4	-	-	C2738.0	C2958.0
	9.00	10	38	88	4	-	-	C2739.0	C2959.0
3/8	9.52	10	45	95	4	54.5	9.5	C2733/8 [1]	
	10.00	10	45	95	4	54.5	9.5	C27310.0	C29510.0
	11.00	12	45	102	4	-	-	C27311.0	C29511.0
	12.00	12	53	110	4	64.5	11.5	C27312.0	C29512.0
1/2	12.70	12	53	110	4	64.5	11.5	C2731/2 [1]	
	13.00	12	53	110	4	64.5	11.5	C27313.0	
	14.00	12	53	110	4	64.5	11.5	C27314.0	
	15.00	12	53	110	4	64.5	11.5	C27315.0	C29515.0
5/8	15.88	16	63	123	4	74.5	15.5	C2735/8 [1]	
	16.00	16	63	123	4	74.5	15.5	C27316.0	C29516.0
	18.00	16	63	123	4	74.5	15.5	C27318.0	C29518.0

[1] 直径公差: + 0.0025 英寸/ - 0.0005 英寸 / tolerância do diâmetro +0.0025 polegadas / -0.0005 polegadas / Tolerancia diámetro + .0025 pulgadas/ -.0005 pulgadas / diameter tolerance +0.0025 inches / -0.0005 inches

d_1 Ø Inch	d_1 Ø mm	d_2 Øh_6 mm	l_2 mm	l_1 mm	z	l_3 mm	d_3 Ø mm	C273	C295
3/4	19.05	20	75	141	4	90.5	18.5	C2733/4 [1]	
	20.00	20	75	141	4	90.5	19.5	C27320.0	C29520.0
	22.00	20	75	141	5	90.5	19.5	C27322.0	
	25.00	25	90	166	5	109.5	24.5	C27325.0	C29525.0
1“	25.40	25	90	166	5	109.5	24.5	C2731 [1]	
	28.00	25	90	166	6	109.5	24.5	C27328.0	
	30.00	25	90	166	6	109.5	24.5	C27330.0	C29530.0
	32.00	32	106	186	6	125.5	31.5	C27332.0	C29532.0
	40.00	40	125	217	6	146.5	39.0	C27340.0 [2][3]	C29540.0

[1] 直径公差: + 0.0025 英寸/ - 0.0005 英寸 / tolerância do diâmetro +0.0025 polegadas / -0.0005 polegadas / Tolerancia diámetro + .0025 pulgadas/ -.0005 pulgadas / diameter tolerance +0.0025 inches / -0.0005 inches
[2] 只能提供 HSCo 产品 / Disponível apenas em HSCo / Disponible solo en HSCo / Available in HSS-E only
[3] 无中心切削 / Sem corte no centro / Sin corte al centro / No centre Cutting

C166

- 立铣刀
- Fresa de Topo
- Fresas de acabado
- End Mill

C166									
■	1.1	6.1	6.2	6.3	7.1	7.2	7.3	8.1	8.2
•	1.2	1.3	2.1	2.2	4.1	5.1			

C166 HSS-E W Z 2 λ40° γ20° DIN 1835B e8 DIN 844L

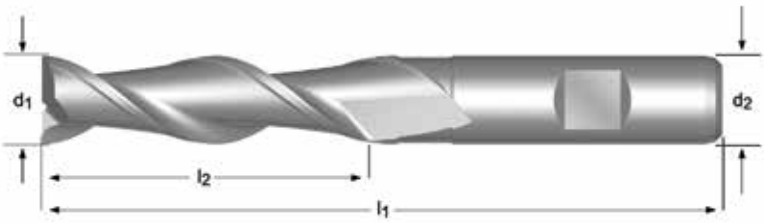

C166

6.00 - 12.00

d_1 Ø mm	d_2 Øh_6 mm	l_2 mm	l_1 mm	z	l_3 mm	d_3 Ø mm	C166
6.00	6	24	68	2	-	-	C1666.0
7.00	10	30	80	2	-	-	C1667.0
8.00	10	38	88	2	-	-	C1668.0
9.00	10	38	88	2	-	-	C1669.0
10.00	10	45	95	2	-	-	C16610.0
12.00	12	53	110	2	-	-	C16612.0

C333
C359

- 立铣刀
- Fresa de Topo
- Fresas de acabado
- End Mill

C333	▪	6.1 6.2 6.3 7.1 7.2 7.3 8.1 8.2
C359	▪	6.1 6.2 6.3 7.1 7.2 7.3 7.4 8.1 8.2

C333	HSS-E PM		W	Z 3		λ40° γ25°	DIN 1835B		k10		DIN 844L
C359	HSS-E PM		W	Z 3		λ40° γ25°	DIN 1835B	Alcrona	k10		DIN 844L

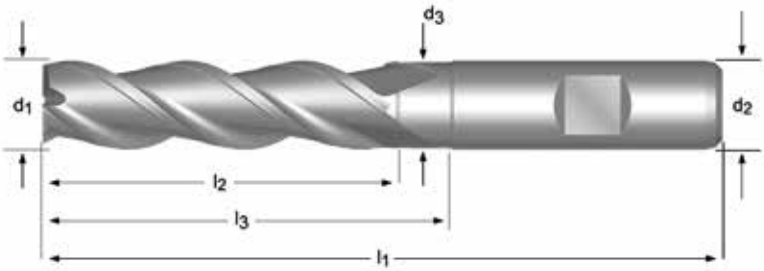

C333	C359
	
10.00 - 30.00	10.00 - 30.00

d_1 Ø mm	d_2 Øh_6 mm	l_2 mm	l_1 mm	z	l_3 mm	d_3 Ø mm	C333	C359
10.00	10	45	95	3	54.5	9.5	C33310.0	C35910.0
12.00	12	53	110	3	64.5	11.5	C33312.0	C35912.0
14.00	12	53	110	3	64.5	11.5	C33314.0	C35914.0
16.00	16	63	123	3	74.5	15.5	C33316.0	C35916.0
18.00	16	63	123	3	74.5	15.5	C33318.0	C35918.0
20.00	20	75	141	3	90.5	19.5	C33320.0	C35920.0
25.00	25	90	166	3	109.5	24.5	C33325.0	C35925.0
30.00	25	90	166	3	109.5	24.5	C33330.0	C35930.0

C324

- 粗加工波刃立铣刀
- Fresa de Topo para Desbaste
- Fresas desbaste
- Roughing End Mill

C324																
▪	1.4	1.5	1.6	2.1	2.2	2.3	3.1	3.2	3.3	3.4	4.2	4.3	5.2	5.3	6.2	7.4
•	1.3	4.1	5.1	6.4												

C324 HSS-E PM | HRA | Z 3 | λ35° γ12° | DIN 1835B | Alcrona | k12 | DIN 327D

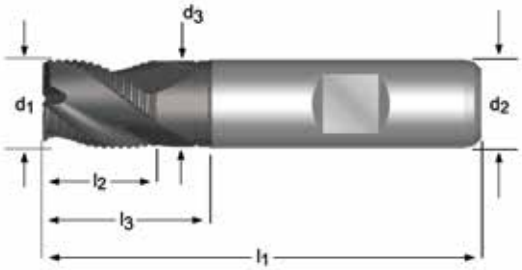

C324

8.00 - 30.00

d_1 Ø mm	d_2 Øh_6 mm	l_2 mm	l_1 mm	z	l_3 mm	d_3 Ø mm	C324
8.00	10	11	61	3	-	-	C3248.0
10.00	10	13	63	3	22.5	9.5	C32410.0
12.00	12	16	73	3	27.5	11.5	C32412.0
14.00	12	16	73	3	27.5	11.5	C32414.0
16.00	16	19	79	3	30.5	15.5	C32416.0
18.00	16	19	79	3	30.5	15.5	C32418.0
20.00	20	22	88	3	37.5	19.5	C32420.0
28.00	25	26	102	3	45.5	24.5	C32428.0
30.00	25	26	102	3	45.5	24.5	C32430.0

DORMER

C922

- 粗加工波刃立铣刀
- Fresa de Topo para Desbaste
- Fresas desbaste
- Roughing End Mill

C922																
■	1.4	1.5	1.6	2.1	2.2	2.3	3.1	3.2	3.3	3.4	4.2	4.3	5.2	5.3	6.2	7.4
•	1.3	4.1	5.1	6.4												

C922 HSS-E PM | HRA | Z 3-4 | λ35° γ12° | DIN 1835B | Alcrona | k12 | DIN 844K

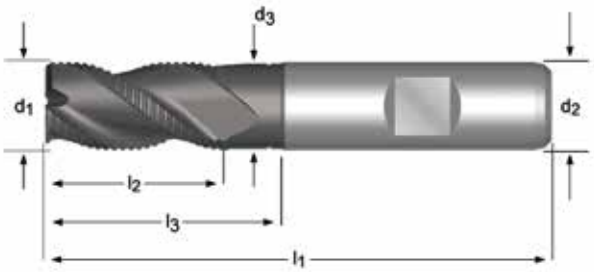

C922

6.00 - 40.00

d_1 Ø mm	d_2 Øh_6 mm	l_2 mm	l_1 mm	z	l_3 mm	d_3 Ø mm	C922
6.00	6	13	57	3	-	-	C9226.0
7.00	10	16	66	3	-	-	C9227.0
8.00	10	19	69	3	-	-	C9228.0
9.00	10	19	69	3	-	-	C9229.0
10.00	10	22	72	3	31.5	9.5	C92210.0
11.00	12	22	79	3	-	-	C92211.0
12.00	12	26	83	3	37.5	11.5	C92212.0
13.00	12	26	83	3	37.5	11.5	C92213.0
14.00	12	26	83	3	37.5	11.5	C92214.0
15.00	12	26	83	3	37.5	11.5	C92215.0
16.00	16	32	92	3	43.5	15.5	C92216.0
18.00	16	32	92	3	43.5	15.5	C92218.0
20.00	20	38	104	3	53.5	19.5	C92220.0
22.00	20	38	104	3	53.5	19.5	C92222.0
24.00	25	45	121	4	64.5	23.5	C92224.0
25.00	25	45	121	4	64.5	24.5	C92225.0
26.00	25	45	121	4	64.5	24.5	C92226.0
28.00	25	45	121	4	64.5	24.5	C92228.0
30.00	25	45	121	4	64.5	24.5	C92230.0
32.00	32	53	133	4	72.5	31.5	C92232.0

C428

- 粗加工波刃立铣刀
- Fresa de Topo para Desbaste
- Fresas desbaste
- Roughing End Mill

C428																	
	■	1.4	1.5	1.6	2.1	2.2	2.3	3.1	3.2	3.3	3.4	4.2	4.3	5.2	5.3	6.2	7.4
	•	1.3	4.1	5.1	6.4												

C428 HSS-E PM | HRA | Z 4-6 | λ35° γ12° | DIN 1835B | Alcrona | k12 | DIN 844K

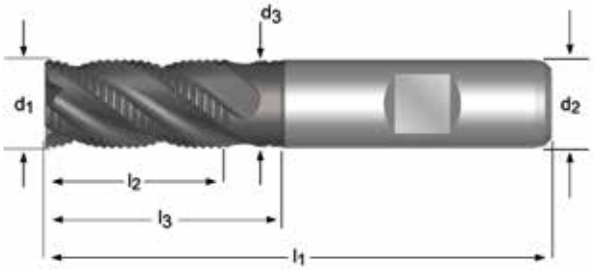

C428

6.00 - 40.00

d_1 Ø mm	d_2 Øh_6 mm	l_2 mm	l_1 mm	z	l_3 mm	d_3 Ø mm	C428
6.00	6	13	57	4	-	-	C4286.0
7.00	10	16	66	4	-	-	C4287.0
8.00	10	19	69	4	-	-	C4288.0
9.00	10	19	69	4	-	-	C4289.0
10.00	10	22	72	4	31.5	9.5	C42810.0
11.00	12	22	79	4	-	-	C42811.0
12.00	12	26	83	4	37.5	11.5	C42812.0
13.00	12	26	83	4	37.5	11.5	C42813.0
14.00	12	26	83	4	37.5	11.5	C42814.0
15.00	12	26	83	4	37.5	11.5	C42815.0
16.00	16	32	92	4	43.5	15.5	C42816.0
18.00	16	32	92	4	43.5	15.5	C42818.0
20.00	20	38	104	4	53.5	19.5	C42820.0
22.00	20	38	104	4	53.5	19.5	C42822.0
25.00	25	45	121	6	64.5	24.5	C42825.0
28.00	25	45	121	6	64.5	24.5	C42828.0
30.00	25	45	121	6	64.5	24.5	C42830.0
32.00	32	53	133	6	72.5	31.5	C42832.0
36.00	32	53	133	6	72.5	31.0	C42836.0
40.00	40	63	155	6	84.5	39.0	C42840.0

DORMER

C492

- 粗加工波刃立铣刀
- Fresa de Topo para Desbaste
- Fresas desbaste
- Roughing End Mill

C492		
	■	1.3 1.4 1.5 1.6 2.1 2.2 2.3 3.1 3.2 3.3 3.4 4.2 4.3 5.2 5.3 6.2 7.4
	•	4.1 5.1 6.4

C492 HSS-E PM | HRA | Z 3-6 | λ35° γ12° | DIN 1835B | Alcrona | k12 | DIN 844L

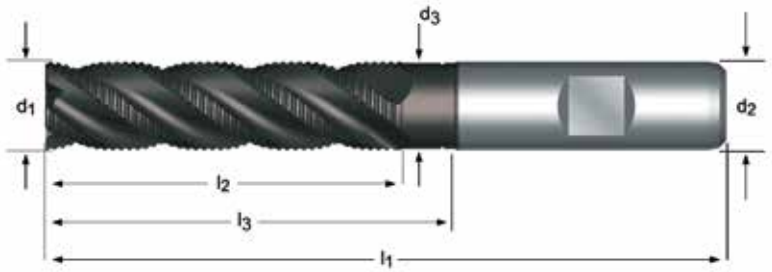

C492

6.00 - 30.00

d_1 Ø mm	d_2 Øh_6 mm	l_2 mm	l_1 mm	z	l_3 mm	d_3 Ø mm	C492
6.00	6	24	68	3	-	-	C4926.0
8.00	10	38	88	3	-	-	C4928.0
10.00	10	45	95	4	54.5	9.5	C49210.0
12.00	12	53	110	4	64.5	11.5	C49212.0
14.00	12	53	110	4	64.5	11.5	C49214.0
16.00	16	63	123	4	74.5	15.5	C49216.0
18.00	16	63	123	4	74.5	15.5	C49218.0
20.00	20	75	141	4	90.5	19.5	C49220.0
22.00	20	75	141	4	90.5	19.5	C49222.0
25.00	25	90	166	6	109.5	24.5	C49225.0
30.00	25	90	166	6	109.5	24.5	C49230.0

C407
C908

- 粗加工波刃立铣刀
- Fresa de Topo para Desbaste
- Fresas desbaste
- Roughing End Mill

C407	▪	1.2 1.3 1.4 1.5 2.1 2.3 3.1 3.2 3.3 3.4 4.2 4.3 5.2 5.3 6.2
	•	1.1 1.6 2.2 4.1 5.1 6.4 7.4
C908	▪	1.3 1.4 1.5 2.1 2.2 2.3 3.1 3.2 3.3 3.4 4.2 4.3 5.2 5.3 6.2
	•	1.6 4.1 5.1 6.4 7.4

C407: HSS-E PM | NRA | Z 4-6 | λ35° γ12° | DIN 1835B | k12 | DIN 844K

C908: HSS-E PM | NRA | Z 4-6 | λ35° γ12° | DIN 1835B | Alcrona | k12 | DIN 844K

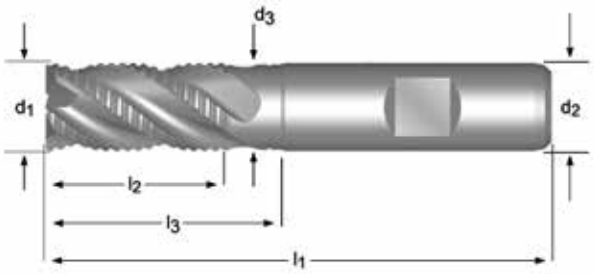

C407	C908
	
6.00 - 32.00	6.00 - 40.00

d_1 Ø mm	d_2 Øh_6 mm	l_2 mm	l_1 mm	z	l_3 mm	d_3 Ø mm	C407	C908
6.00	6	13	57	4	-	-	C4076.0	C9086.0
7.00	10	16	66	4	-	-	C4077.0	C9087.0
8.00	10	19	69	4	-	-	C4078.0	C9088.0
9.00	10	19	69	4	-	-	C4079.0	C9089.0
10.00	10	22	72	4	31.5	9.5	C40710.0	C90810.0
11.00	12	22	79	4	-	-	C40711.0	C90811.0
12.00	12	26	83	4	37.5	11.5	C40712.0	C90812.0
13.00	12	26	83	4	37.5	11.5	C40713.0	C90813.0
14.00	12	26	83	4	37.5	11.5	C40714.0	C90814.0
15.00	12	26	83	4	37.5	11.5	C40715.0	C90815.0
16.00	16	32	92	4	43.5	15.5	C40716.0	C90816.0
18.00	16	32	92	4	43.5	15.5	C40718.0	C90818.0
20.00	20	38	104	4	53.5	19.5	C40720.0	C90820.0
22.00	20	38	104	4	53.5	19.5		C90822.0
25.00	25	45	121	6	64.5	24.5	C40725.0	C90825.0
30.00	25	45	121	6	64.5	24.5		C90830.0
32.00	32	53	133	6	72.5	31.5	C40732.0	C90832.0
40.00	40	63	155	6	84.5	39.0		C90840.0

C944
C948

- 粗加工波刃立铣刀
- Fresa de Topo para Desbaste
- Fresas desbaste
- Roughing End Mill

C944	■	1.3 1.4 1.5 2.1 2.3 3.1 3.2 3.3 3.4 4.2 4.3 5.2 5.3 6.2 7.4
	•	1.6 2.2 4.1 5.1 6.4
C948	■	1.3 1.4 1.5 1.6 2.1 2.2 2.3 3.1 3.2 3.3 3.4 4.2 4.3 5.2 5.3 6.2 7.4
	•	4.1 5.1 6.4

C944	HSS-E PM		NRA	Z 4-6		λ35° γ12°	DIN 1835B		k12		DIN 844L
C948	HSS-E PM		NRA	Z 4-6		λ35° γ12°	DIN 1835B	Alcrona	k12		DIN 844L

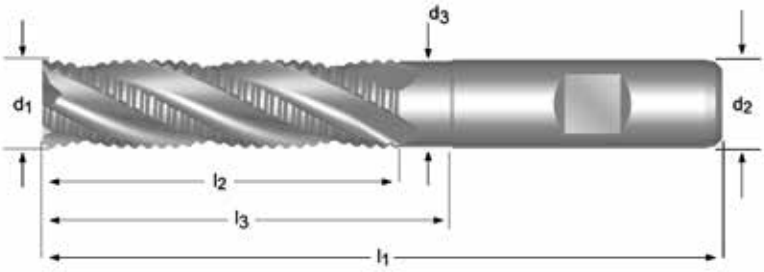

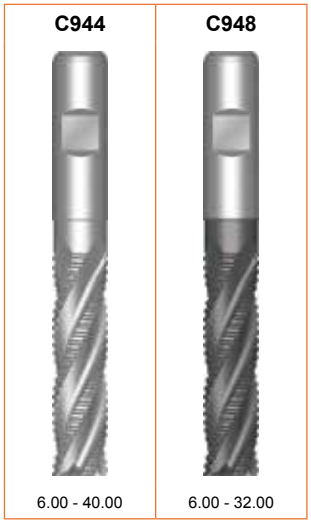

d_1 Ø mm	d_2 Øh_6 mm	l_2 mm	l_1 mm	z	l_3 mm	d_3 Ø mm	C944	C948
6.00	6	24	68	4	-	-	C9446.0	C9486.0
8.00	10	38	88	4	-	-	C9448.0	C9488.0
10.00	10	45	95	4	54.5	9.5	C94410.0	C94810.0
12.00	12	53	110	4	64.5	11.5	C94412.0	C94812.0
14.00	12	53	110	4	64.5	11.5	C94414.0	C94814.0
16.00	16	63	123	4	74.5	15.5	C94416.0	C94816.0
18.00	16	63	123	4	74.5	15.5		C94818.0
20.00	20	75	141	4	90.5	19.5	C94420.0	C94820.0
25.00	25	90	166	6	109.5	24.5	C94425.0	C94825.0
30.00	25	90	166	6	109.5	24.5		C94830.0
32.00	32	106	186	6	125.5	31.5	C94432.0	C94832.0
40.00	40	125	217	6	-	-	C94440.0	

C921

- 粗切立铣刀
- Fresa de Topo para Desbaste
- Fresas desbaste
- Roughing End Mill

C921		
	■	1.3 1.4 1.5 1.6 2.1 2.2 2.3 3.1 3.2 3.3 3.4 4.2 4.3 5.2 5.3 6.2 7.4
	•	4.1 5.1 6.4

C921 HSS-E PM | FS | Z 3-6 | λ45° γ12° | DIN 1835B | Alcrona | k10 | DIN 844K

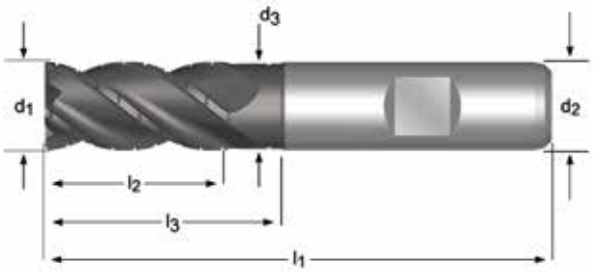

C921

6.00 - 32.00

d_1 Ø mm	d_2 Øh_6 mm	l_2 mm	l_1 mm	z	l_3 mm	d_3 Ø mm	C921
6.00	6	13	57	3	-	-	C9216.0
8.00	10	19	69	4	-	-	C9218.0
10.00	10	22	72	4	31.5	9.5	C92110.0
12.00	12	26	83	4	37.5	11.5	C92112.0
14.00	12	26	83	4	37.5	11.5	C92114.0
16.00	16	32	92	4	43.5	15.5	C92116.0
18.00	16	32	92	4	43.5	15.5	C92118.0
20.00	20	38	104	4	53.5	19.5	C92120.0
22.00	20	38	104	5	53.5	19.5	C92122.0
25.00	25	45	121	5	64.5	24.5	C92125.0
28.00	25	45	121	6	64.5	24.5	C92128.0
30.00	25	45	121	6	64.5	24.5	C92130.0
32.00	32	53	133	6	72.5	31.5	C92132.0

C400
C413

- 粗加工波刃立铣刀
- Fresa de Topo para Desbaste
- Fresas desbaste
- Roughing End Mill

C400	▪	1.2	1.3	6.2	6.3											
	•	1.1	1.4	2.1	3.1	3.2	3.3	3.4	4.1	4.2	5.1	5.2	6.1	7.2	7.3	8.1
C413	▪	1.2	1.3	1.4	3.1	3.2	3.3	3.4	4.2	5.2	6.2	6.3				
	•	1.1	1.5	1.6	2.1	2.3	4.1	4.3	5.1	5.3	6.1	6.4	7.2	7.3	7.4	8.1

C400	HSS-E		NF	Z 4-6		λ30° γ12°	DIN 1835B		k12		DIN 844K
C413	HSS-E		NF	Z 4-6		λ30° γ12°	DIN 1835B	TiCN	k12		DIN 844K

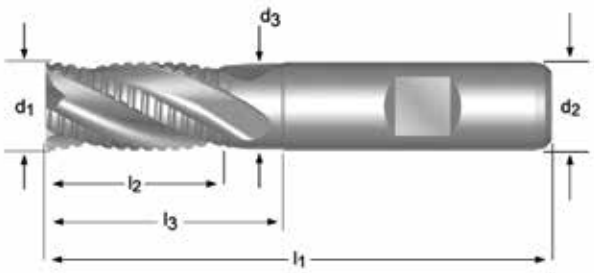

C400	C413
	
6.00 - 50.00	6.00 - 32.00

d_1 Ø mm	d_2 Øh_6 mm	l_2 mm	l_1 mm	z	l_3 mm	d_3 Ø mm	C400	C413
6.00	6	13	57	4	-	-	C4006.0	C4136.0
7.00	10	16	66	4	-	-	C4007.0	
8.00	10	19	69	4	-	-	C4008.0	C4138.0
9.00	10	19	69	4	-	-	C4009.0	
10.00	10	22	72	4	-	-	C40010.0	C41310.0
11.00	12	22	79	4	-	-	C40011.0	
12.00	12	26	83	4	-	-	C40012.0	C41312.0
14.00	12	26	83	4	37.5	11.5	C40014.0	C41314.0
16.00	16	32	92	4	43.5	15.5	C40016.0	C41316.0
18.00	16	32	92	4	43.5	15.5	C40018.0	C41318.0
20.00	20	38	104	4	53.5	19.5	C40020.0	C41320.0
22.00	20	38	104	4	53.5	19.5	C40022.0	C41322.0
25.00	25	45	121	5	64.5	24.5	C40025.0	C41325.0
30.00	25	45	121	5	64.5	24.5	C40030.0	
32.00	32	53	133	6	72.5	31.0	C40032.0	C41332.0
50.00	50	75	177	6	96.5	48.0	C40050.0	

C403
C429

- 粗加工波刃立铣刀
- Fresa de Topo para Desbaste
- Fresas desbaste
- Roughing End Mill

C403	▪	1.2	1.3	6.2	6.3											
	•	1.1	1.4	2.1	3.1	3.2	3.3	3.4	4.1	4.2	5.1	5.2	6.1	7.2	7.3	8.1
C429	▪	1.2	1.3	1.4	3.1	3.2	3.3	3.4	4.2	5.2	6.2	6.3				
	•	1.1	1.5	1.6	2.1	2.3	4.1	4.3	5.1	5.3	6.1	6.4	7.2	7.3	7.4	8.1

C403	HSS-E		NF	Z 4-6		λ30° γ12°	DIN 1835B		k12		DIN 844L
C429	HSS-E		NF	Z 4-6		λ30° γ12°	DIN 1835B	TiCN	k12		DIN 844L

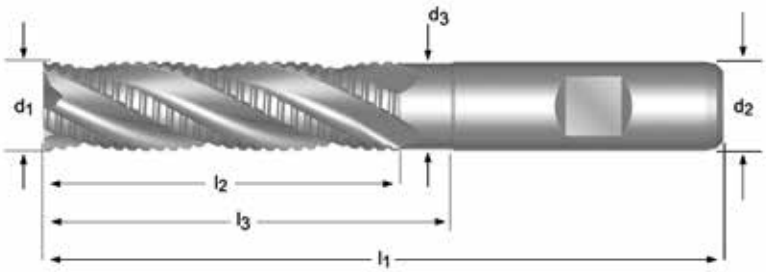

C403	C429
	
10.00 - 50.00	10.00 - 32.00

d_1 Ø mm	d_2 Øh_6 mm	l_2 mm	l_1 mm	z	l_3 mm	d_3 Ø mm	C403	C429
10.00	10	45	95	4	-	-	C40310.0	C42910.0
12.00	12	53	110	4	-	-	C40312.0	C42912.0
14.00	12	53	110	4	64.5	11.5	C40314.0	C42914.0
16.00	16	63	123	4	74.5	15.5	C40316.0	C42916.0
18.00	16	63	123	4	74.5	15.5	C40318.0	C42918.0
20.00	20	75	141	4	90.5	19.5	C40320.0	C42920.0
25.00	25	90	166	5	109.5	24.5		C42925.0
30.00	25	90	166	5	109.5	24.5	C40330.0	C42930.0
32.00	32	106	186	6	125.5	31.0	C40332.0	C42932.0
36.00	32	106	186	6	125.5	31.5	C40336.0	
40.00	40	125	217	6	146.5	39.0	C40340.0	
45.00	40	125	217	6	146.5	39.5	C40345.0	
50.00	50	150	252	6	171.5	48.0	C40350.0	

C500
C503

- 球头立铣刀
- Fresa de topo esférico
- Fresas con punta esferica
- Ball-Nosed End Mill

C500	▪	1.1 1.2 4.1 5.1 6.1 6.2 6.3
	•	1.3 1.4 2.1 3.1 3.2 3.3 3.4 4.2 5.2 7.1 7.2 7.3 8.1
C503	▪	1.1 1.2 1.3 1.4 3.1 3.2 3.3 3.4 4.1 4.2 5.1 5.2 6.1 6.2 6.3
	•	1.5 1.6 2.1 2.3 4.3 5.3 6.4 7.1 7.2 7.3 7.4 8.1

C500	HSS-E		N	Z 2		λ30° γ12°	DIN 1835B		e8		DIN 327D
C503	HSS-E		N	Z 2		λ30° γ12°	DIN 1835B	TiCN	e8		DIN 327D

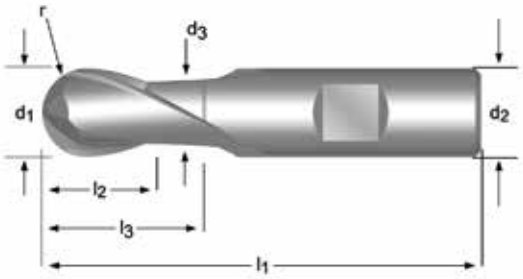

C500	C503
	
2.00 - 25.00	2.00 - 25.00

d_1 Ø mm	r ±0.05 mm	d_2 Øh_6 mm	l_2 mm	l_1 mm	z	l_3 mm	d_3 Ø mm	C500	C503
2.00	1.00	6	4	48	2	-	-	C5002.0	C5032.0
3.00	1.50	6	5	49	2	-	-	C5003.0	C5033.0
4.00	2.00	6	7	51	2	-	-	C5004.0	C5034.0
5.00	2.50	6	8	52	2	-	-	C5005.0	C5035.0
6.00	3.00	6	8	52	2	-	-	C5006.0	C5036.0
7.00	3.50	10	10	60	2	-	-	C5007.0	
8.00	4.00	10	11	61	2	-	-	C5008.0	C5038.0
9.00	4.50	10	11	61	2	-	-	C5009.0	
10.00	5.00	10	13	63	2	-	-	C50010.0	C50310.0
12.00	6.00	12	16	73	2	-	-	C50012.0	C50312.0
14.00	7.00	12	16	73	2	27.5	11.5	C50014.0	C50314.0
15.00	7.50	12	16	73	2	27.5	11.5	C50015.0	C50315.0
16.00	8.00	16	19	79	2	30.5	15.5	C50016.0	C50316.0
18.00	9.00	16	19	79	2	30.5	15.5	C50018.0	C50318.0
20.00	10.00	20	22	88	2	37.5	19.5	C50020.0	C50320.0
25.00	12.50	25	26	102	2	45.5	24.5	C50025.0	C50325.0

C505

- 球头立铣刀
- Fresa de topo esférico
- Fresas con punta esferica
- Ball-Nosed End Mill

C505														
	■	1.1	1.2	4.1	5.1	6.1	6.2	6.3						
	•	1.3	1.4	2.1	3.1	3.2	3.3	3.4	4.2	5.2	7.1	7.2	7.3	8.1

C505 HSS-E N Z 2 λ30° γ12° DIN 1835B e8 DIN 844K

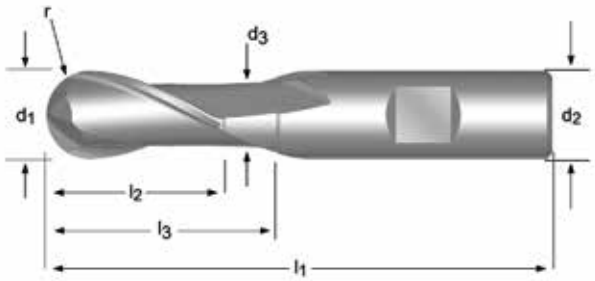

C505

3.00 - 30.00

d_1 Ø mm	r ±0.05 mm	d_2 Øh_6 mm	l_2 mm	l_1 mm	z	l_3 mm	d_3 Ø mm	C505
3.00	1.50	6	8	52	2	-	-	C5053.0
4.00	2.00	6	11	55	2	-	-	C5054.0
5.00	2.50	6	13	57	2	-	-	C5055.0
6.00	3.00	6	13	57	2	-	-	C5056.0
8.00	4.00	10	19	69	2	-	-	C5058.0
10.00	5.00	10	22	72	2	-	-	C50510.0
12.00	6.00	12	26	83	2	-	-	C50512.0
14.00	7.00	12	26	83	2	37.5	11.5	C50514.0
16.00	8.00	16	32	92	2	43.5	15.5	C50516.0
20.00	10.00	20	38	104	2	53.5	19.5	C50520.0
22.00	11.00	20	38	104	2	53.5	19.5	C50522.0
25.00	12.50	25	45	121	2	64.5	24.5	C50525.0
28.00	14.00	25	45	121	2	64.5	24.5	C50528.0
30.00	15.00	25	45	121	2	64.5	24.5	C50530.0

C511

- 球头立铣刀
- Fresa de topo esférico
- Fresas con punta esferica
- Ball-Nosed End Mill

C511														
	■	1.1	1.2	4.1	5.1	6.1	6.2	6.3						
	•	1.3	1.4	2.1	3.1	3.2	3.3	3.4	4.2	5.2	7.1	7.2	7.3	8.1

C511 HSS-E N Z 2 λ30° γ12° DIN 1835B e8 DORMER

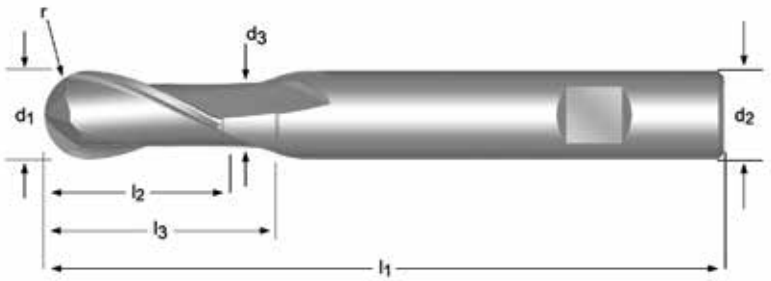

C511

3.00 - 20.00

d_1 Ø mm	r ±0.05 mm	d_2 Øh_6 mm	l_2 mm	l_1 mm	z	l_3 mm	d_3 Ø mm	C511
3.00	1.50	6	8	56	2	-	-	C5113.0
4.00	2.00	6	11	63	2	-	-	C5114.0
5.00	2.50	6	13	68	2	-	-	C5115.0
6.00	3.00	6	13	68	2	-	-	C5116.0
8.00	4.00	10	19	88	2	-	-	C5118.0
10.00	5.00	10	22	95	2	-	-	C51110.0
12.00	6.00	12	26	110	2	-	-	C51112.0
14.00	7.00	12	26	110	2	64.5	11.5	C51114.0
16.00	8.00	16	32	123	2	74.5	15.5	C51116.0
18.00	9.00	16	32	123	2	74.5	15.5	C51118.0
20.00	10.00	20	38	141	2	90.5	19.5	C51120.0

C800

- T-形槽铣刀
- Fresa p/ Abrir Rasgos T
- Fresas de ranurar en “T”
- T-slot Cutter

C800 ▪ 1.1 1.2 1.3 1.4 1.5 1.6 2.1 2.2 2.3 3.1 3.2 3.3 3.4 4.1 4.2 4.3 5.1 5.2 5.3 6.1 6.2 6.3 6.4 7.1 7.2 7.3 7.4 8.1 10.1

C800 HSS-E | N | Z 6-8 | λ15° γ10° | DIN1835 D B | d11 | DIN 851

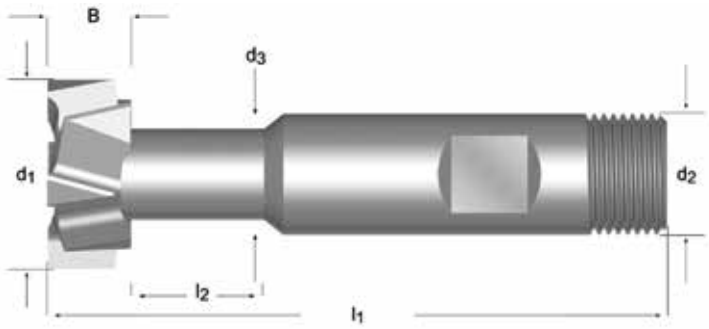

C800

11.00 - 50.00

B mm	d_1 Ø mm	T DIN650	d_3 Ø mm	l_2 mm	l_1 mm	d_2 Øh_6 mm	z	C800
4.0	11.00	5	4	6.5	53.5	10	6	C80011.0X5.0
6.0	12.50	6	5	9	57.0	10	6	C80012.5X6.0
8.0	16.00	8	7	12	62.0	10	6	C80016.0X8.0
8.0	18.00	10	8	15	70.0	12	6	C80018.0X10.0
9.0	21.00	12	10	18	74.0	12	8	C80021.0X12.0
11.0	25.00	14	12	20	82.0	16	8	C80025.0X14.0
14.0	32.00	18	15	26	90.0	16	8	C80032.0X18.0
18.0	40.00	22	19	27	108.0	25	8	C80040.0X22.0
22.0	50.00	28	25	34	124.0	32	8	C80050.0X28.0

C810

- T-形槽铣刀
- Fresa p/ Abrir Rasgos T
- Fresas de ranurar en “T”
- T-slot Cutter

C810																			
▪	1.1	1.2	1.3	1.4	2.1	3.1	3.2	3.3	3.4	4.1	5.1	6.1	6.2	6.3	6.4	7.1	7.2	7.3	
•	1.5	1.6	2.2	2.3	4.2	4.3	5.2	5.3	7.4	8.1	10.1								

C810 HSS N Z 6-8 λ12° γ10° DIN 1835D d11 DORMER

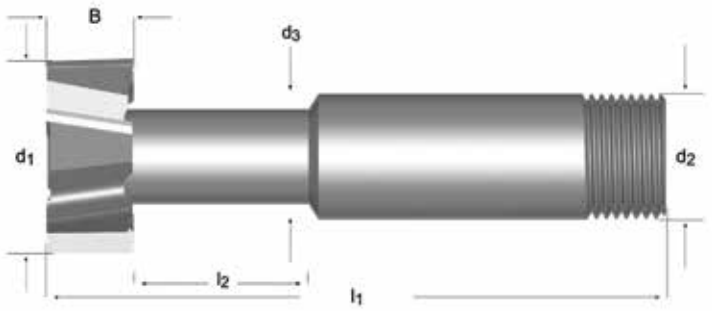

C810

12.50 - 40.00

B Inch	B mm	d_1 Ø Inch	d_1 Ø mm	T DIN650	d_3 Ø mm	l_2 mm	l_1 mm	d_2 Ø0,-0.025 Inch	d_2 Ø0,-0.025 mm	z	C810
	6.00		12.50	6.0	5.00	11	57.0		10.0	6	C8106.0
1/4	6.35	37/64	14.68	1/4	6.35	14	60.5	1/2	12.7	6	C8101/4 [9]
	8.00		16.00	8.0	7.00	13	61.0		10.0	6	C8108.0
5/16	7.94	45/64	17.86	5/16	7.15	17	65.0	1/2	12.7	6	C8105/16 [9]
	8.00		18.00	10.0	8.00	17	65.0		12.0	6	C81010.0
	9.00		21.00	12.0	10.00	20	69.0		12.0	6	C81012.0
23/64	9.13	53/64	21.03	3/8	8.75	19	68.5	1/2	12.7	6	C8103/8 [9]
27/64	10.72	61/64	24.21	7/16	9.50	22	73.0	1/2	12.7	6	C8107/16 [9]
	11.00		25.00	14.0	12.00	23	79.0		16.0	6	C81014.0
15/32	11.91	1.5/64	27.38	1/2	11.90	24	76.0	1/2	12.7	6	C8101/2 [9]
	12.00		28.00	16.0	13.00	23	76.0		16.0	6	C81016.0
	14.00		32.00	18.0	15.00	27	98.0		25.0	8	C81018.0
	16.00		36.00	20.0	17.00	30	100.0		25.0	8	C81020.0
	18.00		40.00	22.0	19.00	33	108.0		25.0	8	C81022.0

[9] 标准 - BS 122/4 / Standard - BS 122/4 / Estándar - BS 122/4 / Standard - BS 122/4

C825

- T-形槽铣刀
- Fresa p/ Abrir Rasgos T
- Fresas de ranurar en “T”
- T-slot Cutter

C825 ▪ 1.1 1.2 1.3 1.4 1.5 1.6 2.1 2.2 2.3 3.1 3.2 3.3 3.4 4.1 4.2 4.3 5.1 5.2 5.3 6.1 6.2 6.3 6.4 7.1 7.2 7.3 7.4 8.1 10.1

C825 HSS-E N Z 8-12 λ15° γ15° DIN 1835B js16

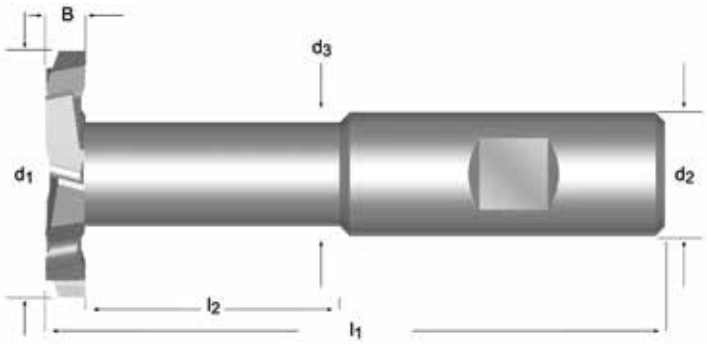

C825

40.00 - 63.00

B mm	d_1 Ø mm	Ch mm	d_3 Ø mm	l_2 mm	l_1 mm	d_2 Øh_6 mm	z	C825
3	40	0.15	19.2	46	100	20	8	C8253.0X40.0
4	40	0.15	19.2	45	100	20	8	C8254.0X40.0
5	40	0.15	19.2	44	100	20	8	C8255.0X40.0
6	40	0.15	19.2	43	100	20	8	C8256.0X40.0
8	40	0.15	19.2	41	100	20	8	C8258.0X40.0
10	40	0.15	19.2	39	100	20	8	C82510.0X40.0
6	63	0.15	24.2	67	130	25	12	C8256.0X63.0
8	63	0.15	24.2	65	130	25	12	C8258.0X63.0
10	63	0.15	24.2	63	130	25	12	C82510.0X63.0
12	63	0.15	24.2	61	130	25	12	C82512.0X63.0
14	63	0.15	24.2	59	130	25	12	C82514.0X63.0
16	63	0.15	24.2	57	130	25	12	C82516.0X63.0

C801

- T-形槽铣刀
- Fresa p/ Abrir Rasgos T
- Fresas de ranurar en “T”
- T-slot Cutter

C801	▪	1.1	1.2	1.3	1.4	1.5	1.6	2.1	2.2	2.3	3.1	3.2	3.3	3.4	4.1	4.2	4.3	5.1	5.2	5.3	6.1
		6.2	6.3	6.4	7.1	7.2	7.3	7.4	8.1	10.1											

C801 HSS-E | NF | Z 6-8 | λ12° γ10° | DIN 1835B | d11 | DIN 851

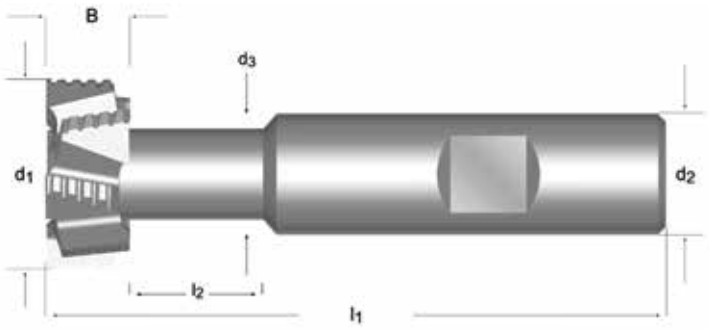

C801

16.00 - 32.00

B mm	d_1 Ø mm	T DIN650	d_3 Ø mm	l_2 mm	l_1 mm	d_2 Øh_6 mm	z	C801
8.0	16.0	8	7	10	62	10	6	C80116.0X8.0
8.0	18.0	10	8	13	70	12	6	C80118.0X10.0
9.0	21.0	12	10	16	74	12	6	C80121.0X12.0
11.0	25.0	14	12	17	82	16	8	C80125.0X14.0
14.0	32.0	18	15	22	90	16	8	C80132.0X18.0

C822

- 半圆刃T型槽铣刀
- Fresa para ranhuras tipo Woodruff
- Fresas para ranurados tipo Woodruff
- Woodruff Cutter

C822 ▪ 1.1 1.2 1.3 1.4 1.5 1.6 2.1 2.2 2.3 3.1 3.2 3.3 3.4 4.1 4.2 4.3 5.1 5.2 5.3 6.1 6.2 6.3 6.4 7.1 7.2 7.3 7.4 8.1 10.1

C822 HSS-E | N | Z 6-12 | λ10° γ10° | DIN1835 D B | h11 | DIN 850

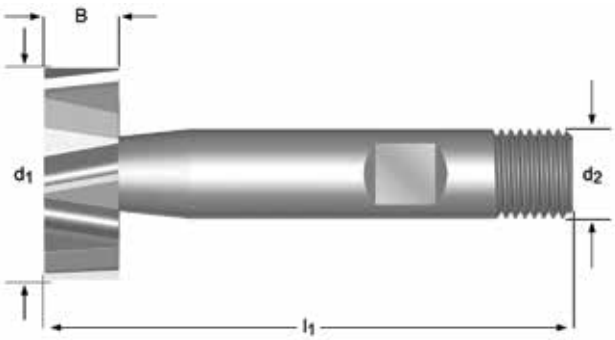

C822

4.50 - 45.50

B mm	d_1 Ø mm	l_1 mm	d_2 Øh_6 mm	z	C822
1.0	4.50	50	6	6	C8224.5X1.0
1.5	7.50	50	6	6	C8227.5X1.5
2.0	7.50	50	6	6	C8227.5X2.0
2.0	10.50	50	6	8	C82210.5X2.0
2.5	10.50	50	6	8	C82210.5X2.5
3.0	10.50	50	6	8	C82210.5X3.0
3.0	13.50	56	10	8	C82213.5X3.0
4.0	13.50	56	10	8	C82213.5X4.0
3.0	16.50	56	10	8	C82216.5X3.0
4.0	16.50	56	10	8	C82216.5X4.0
5.0	16.50	56	10	8	C82216.5X5.0
3.0	19.50	63	10	10	C82219.5X3.0
4.0	19.50	63	10	10	C82219.5X4.0
5.0	19.50	63	10	10	C82219.5X5.0
5.0	22.50	63	10	10	C82222.5X5.0
6.0	22.50	63	10	10	C82222.5X6.0
8.0	22.50	63	10	10	C82222.5X8.0
6.0	25.50	63	10	12	C82225.5X6.0
6.0	28.50	63	10	12	C82228.5X6.0
8.0	28.50	63	10	12	C82228.5X8.0
10.0	28.50	71	12	12	C82228.5X10.0
8.0	32.50	71	12	12	C82232.5X8.0
10.0	32.50	71	12	12	C82232.5X10.0
10.0	45.50	71	12	12	C82245.5X10.0

DORMER

C820

- 半圆刃T型槽铣刀
- Fresa para ranhuras tipo Woodruff
- Fresas para ranurados tipo Woodruff
- Woodruff Cutter

C820																			
	■	1.1	1.2	1.3	1.4	2.1	2.2	3.1	3.2	3.3	3.4	4.1	5.1	6.1	6.2	6.3	7.1	7.2	7.3
	•	1.5	1.6	2.3	4.2	4.3	5.2	5.3	6.4	7.4	8.1	10.1							

C820 HSS N Z 6-12 λ12° γ10° DIN 1835D DORMER

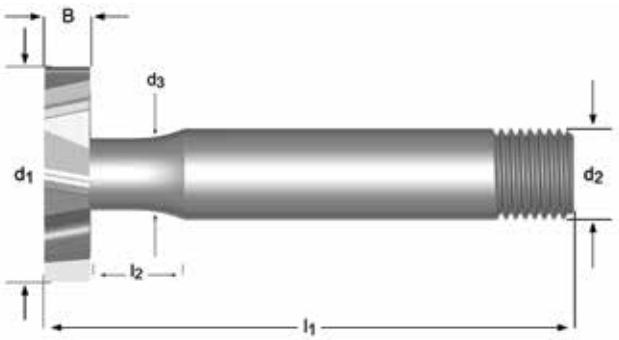

C820

10.50 - 45.50

Nr.	B Inch	B mm	d1 Ø Inch	d1 Ø mm	d3 Ø mm	l2 mm	l1 mm	d2 Ø0,-0.025 Inch	d2 Ø0,-0.025 mm	z	C820
		2.00		10.50	3.90	10	57.0		12.0	6	C82010.5X2.0
		2.50		10.50	3.90	10	57.0		12.0	6	C82010.5X2.5
		3.00		10.50	4.20	10	57.0		12.0	6	C82010.5X3.0
204	1/16	1.59	1/2	12.70	3.30	10	57.0	1/2	12.7	6	C820204 9)
404	1/8	3.18	1/2	12.70	4.85	10	57.0	1/2	12.7	6	C820404 9)
		2.00		13.50	4.00	10	57.0		12.0	6	C82013.5X2.0
		2.50		13.50	4.00	10	57.0		12.0	6	C82013.5X2.5
		3.00		13.50	5.00	10	57.0		12.0	6	C82013.5X3.0
		4.00		13.50	5.00	10	57.0		12.0	6	C82013.5X4.0
405	1/8	3.18	5/8	15.88	5.65	10	57.0	1/2	12.7	6	C820405 9)
505	5/32	3.97	5/8	15.88	6.35	10	57.0	1/2	12.7	6	C820505 9)
		2.50		16.50	4.00	10	57.0		12.0	6	C82016.5X2.5
		3.00		16.50	5.00	10	57.0		12.0	6	C82016.5X3.0
		4.00		16.50	5.00	10	57.0		12.0	6	C82016.5X4.0
		5.00		16.50	5.60	10	57.0		12.0	6	C82016.5X5.0
406	1/8	3.18	3/4	19.05	5.50	10	57.0	1/2	12.7	6	C820406 9)
506	5/32	3.97	3/4	19.05	6.35	10	57.0	1/2	12.7	6	C820506 9)
606	3/16	4.76	3/4	19.05	7.15	10	57.0	1/2	12.7	6	C820606 9)
		3.00		19.50	5.60	10	57.0		12.0	6	C82019.5X3.0
		4.00		19.50	5.60	10	57.0		12.0	6	C82019.5X4.0
		5.00		19.50	6.00	10	57.0		12.0	6	C82019.5X5.0
507	5/32	3.97	7/8	22.23	6.35	10	63.5	1/2	12.7	8	C820507 9)
607	3/16	4.76	7/8	22.23	7.15	10	63.5	1/2	12.7	8	C820607 9)
807	1/4	6.35	7/8	22.23	8.75	10	63.5	1/2	12.0	8	C820807 9)
		4.00		22.50	5.60	10	63.5		12.0	8	C82022.5X4.0
		5.00		22.50	6.00	10	63.5		12.0	8	C82022.5X5.0
		6.00		22.50	6.50	10	63.5		12.0	8	C82022.5X6.0
608	3/16	4.76	1“	25.40	7.15	10	70.0	1/2	12.7	8	C820608 9)
808	1/4	6.35	1“	25.40	8.75	10	70.0	1/2	12.7	8	C820808 9)
1008	5/16	7.94	1“	25.40	10.30	10	70.0	1/2	12.7	8	C8201008 9)
		5.00		25.50	7.50	10	70.0		12.0	8	C82025.5X5.0
		6.00		25.50	7.50	10	70.0		12.0	8	C82025.5X6.0
		8.00		25.50	8.00	10	70.0		12.0	8	C82025.5X8.0
		5.00		28.50	8.00	12	70.0		12.0	8	C82028.5X5.0
		6.00		28.50	8.50	12	70.0		12.0	8	C82028.5X6.0
		8.00		28.50	9.00	12	70.0		12.0	8	C82028.5X8.0

9) 标准 - BS 122/4 / Standard - BS 122/4 / Norma - BS 122/4 / Standard - BS 122/4

Nr.	B Inch	B mm	d_1 Ø Inch	d_1 Ø mm	d_3 Ø mm	l_2 mm	l_1 mm	d_2 Ø0,-0.025 Inch	d_2 Ø0,-0.025 mm	z	C820
610	3/16	4.76	1.1/4	31.75	7.95	12	70.0	1/2	12.7	10	C820610 [9]
810	1/4	6.35	1.1/4	31.75	9.50	12	70.0	1/2	12.7	10	C820810 [9]
1010	5/16	7.94	1.1/4	31.75	11.10	12	70.0	1/2	12.7	10	C8201010 [9]
1210	3/8	9.53	1.1/4	31.75	11.95	12	70.0	1/2	12.7	10	C8201210 [9]
		5.00		32.50	8.00	12	70.0		12.0	10	C82032.5X5.0 [9]
		6.00		32.50	8.50	12	70.0		12.0	10	C82032.5X6.0
		8.00		32.50	9.00	12	70.0		12.0	10	C82032.5X8.0
811	1/4	6.35	1.3/8	34.93	11.10	20	76.0	1/2	12.7	10	C820811 [9]
1011	5/16	7.94	1.3/8	34.93	11.95	20	76.0	1/2	12.7	10	C8201011 [9]
1211	3/8	9.53	1.3/8	34.93	11.95	20	76.0	1/2	12.7	10	C8201211 [9]
		6.00		35.50	9.50	20	76.0		12.0	10	C82035.5X6.0
		8.00		35.50	11.50	20	76.0		12.0	10	C82035.5X8.0
812	1/4	6.35	1.1/2	38.10	11.10	20	76.0	1/2	12.7	10	C820812 [9]
1012	5/16	7.94	1.1/2	38.10	11.95	20	76.0	1/2	12.7	10	C8201012 [9]
1212	3/8	9.53	1.1/2	38.10	11.95	20	76.0	1/2	12.7	10	C8201212 [9]
		8.00		38.50	11.50	20	76.0		12.0	10	C82038.5X8.0
		10.00		38.50	11.50	20	76.0		12.0	10	C82038.5X10.0
		10.00		45.50	11.50	20	76.0		12.0	12	C82045.5X10.0

[9] 标准 - BS 122/4 / Standard - BS 122/4 / Norma - BS 122/4 / Standard - BS 122/4

C837

- 燕尾槽铣刀
- Fresa Rabo de Andorinha
- Fresas de cola de milano
- Dovetail Cutter

C837																		
■	1.1	1.2	1.3	1.4	2.1	3.1	3.2	3.3	3.4	4.1	5.1	6.1	6.2	6.3	7.1	7.2	7.3	
•	1.5	1.6	2.2	2.3	4.2	4.3	5.2	5.3	6.4	7.4	8.1							

C837 HSS N Z 6-8 λ0° γ0° DIN 1835D DORMER

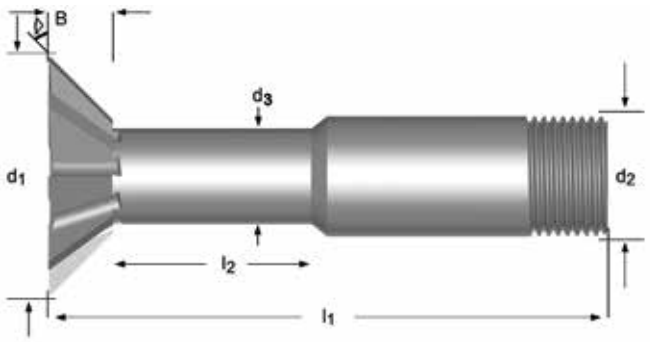

C837

13.00 - 38.00

▷	B mm	d1 Ø Inch	d1 Ø mm	d3 Ø mm	l2 mm	l1 mm	d2 Ø0,-0.025 Inch	d2 Ø0,-0.025 mm	z	C837
45°	3.0		13.00	4.75	16.5	63.5		12.00	6	C83713.0
45°	4.0	5/8	15.88	6.35	17.5	66.5	1/2	12.70	6	C8375/8 [9]
45°	4.0		16.00	6.35	17.5	66.5		12.00	6	C83716.0
45°	5.5		19.00	6.35	16.0	66.5		12.00	6	C83719.0
45°	5.5	3/4	19.05	6.35	16.0	66.5	1/2	12.70	6	C8373/4 [9]
45°	6.5		22.00	7.15	16.0	68.5		12.00	6	C83722.0
45°	6.5	7/8	22.23	7.15	16.0	68.5	1/2	12.70	6	C8377/8 [9]
45°	7.5		25.00	7.95	16.5	70.0		12.00	6	C83725.0
45°	8.0	1“	25.40	7.95	16.0	70.0	1/2	12.70	6	C8371
45°	8.5		28.00	9.55	17.0	71.5		16.00	6	C83728.0
45°	10.5		38.00	12.70	16.0	78.5		25.00	8	C83738.0

[9] 标准 - BS 122/4 / Standard - BS 122/4 / Norma - BS 122/4 / Standard - BS 122/4

C835

- 燕尾槽铣刀
- Fresa Rabo de Andorinha
- Fresas de cola de milano
- Dovetail Cutter

C835																		
■	1.1	1.2	1.3	1.4	2.1	3.1	3.2	3.3	3.4	4.1	5.1	6.1	6.2	6.3	7.1	7.2	7.3	
•	1.5	1.6	2.2	2.3	4.2	4.3	5.2	5.3	6.4	7.4	8.1							

C835 HSS N Z 6-8 λ0° γ0° DIN 1835D DORMER

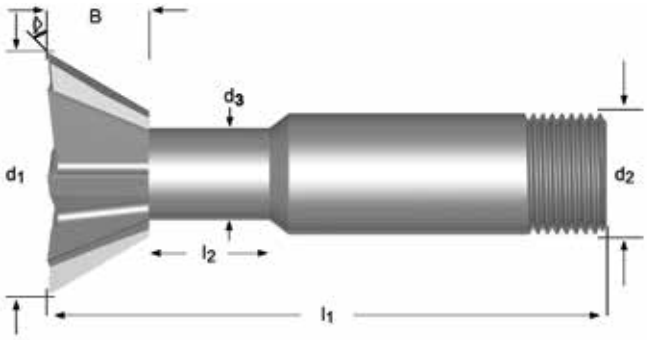

C835

1/2 - 1.1/2

▷	B mm	d1 Ø Inch	d1 Ø mm	d3 Ø mm	l2 mm	l1 mm	d2 Ø0,-0.025 Inch	d2 Ø0,-0.025 mm	z	C835
60°	4.0	1/2	12.70	7.15	16.5	63.5	1/2	12.70	6	C8351/2 [9]
60°	4.0		13.00	7.15	16.5	63.5		12.00	6	C83513.0
60°	5.5	5/8	15.88	7.55	18.0	66.5	1/2	12.70	6	C8355/8 [9]
60°	5.5		16.00	7.55	18.0	66.5		12.00	6	C83516.0
60°	7.0		19.00	8.35	17.5	67.5		12.00	6	C83519.0
60°	7.0	3/4	19.05	8.35	17.5	67.5	1/2	12.70	6	C8353/4 [9]
60°	9.5		22.00	8.75	15.0	67.5		12.00	6	C83522.0
60°	9.5	7/8	22.23	8.75	15.0	67.5	1/2	12.70	6	C8357/8 [9]
60°	12.0		25.00	8.75	15.0	70.0		12.00	6	C83525.0
60°	12.0	1“	25.40	8.75	15.0	70.0	1/2	12.70	6	C8351 [9]
60°	12.5		28.00	11.10	15.5	73.0		16.00	6	C83528.0
60°	12.5	1.1/8	28.58	11.10	15.5	73.0	5/8	15.88	6	C8351.1/8 [9]
60°	13.5		32.00	12.70	16.0	74.5		16.00	8	C83532.0
60°	13.5	1.1/4	31.75	12.70	16.0	74.5	5/8	15.88	8	C8351.1/4 [9]
60°	14.5	1.3/8	34.93	12.70	16.0	82.5	1“	25.40	8	C8351.3/8 [9]
60°	14.5		35.00	12.70	16.0	82.5		25.00	8	C83535.0
60°	16.0		38.00	17.45	16.0	84.0		25.00	8	C83538.0
60°	16.0	1.1/2	38.10	17.45	16.0	84.0	1“	25.40	8	C8351.1/2 [9]

[9] 标准 - BS 122/4 / Standard - BS 122/4 / Norma - BS 122/4 / Standard - BS 122/4

DORMER

C830

- 燕尾槽铣刀
- Fresa Rabo de Andorinha
- Fresas de cola de milano
- Dovetail Cutter

C830	▪	1.1	1.2	1.3	1.4	1.5	1.6	2.1	2.2	2.3	3.1	3.2	3.3	3.4	4.1	4.2	4.3	5.1	5.2	5.3	6.1
		6.2	6.3	6.4	7.1	7.2	7.3	7.4	8.1	10.1											

C830 HSS-E | N | Z 10-12 | λ0° γ0° | DIN 1835B | js16 | DIN 1833C

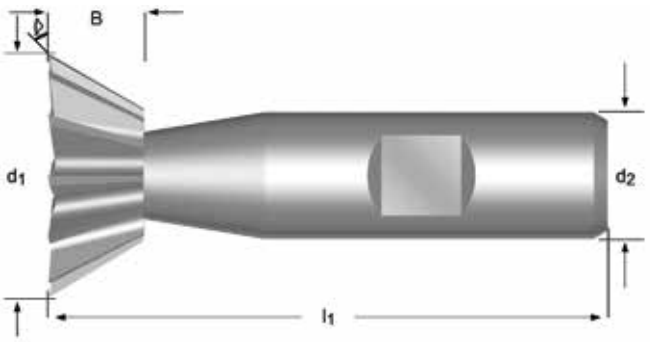

C830

12.00 - 32.00

▷	B mm	d_1 Ø mm	l_1 mm	d_2 Øh_6 mm	z	C830
45°	3.5	12.0	54	10	10	C83012.0X45
45°	4.0	16.0	60	12	10	C83016.0X45
45°	5.0	20.0	63	12	10	C83020.0X45
45°	6.3	25.0	67	12	10	C83025.0X45
45°	8.0	32.0	71	16	12	C83032.0X45
60°	5.0	12.0	54	10	10	C83012.0X60
60°	6.3	16.0	60	12	10	C83016.0X60
60°	8.0	20.0	63	12	10	C83020.0X60
60°	10.0	25.0	67	12	10	C83025.0X60
60°	12.5	32.0	71	16	12	C83032.0X60

C831

- 反燕尾槽铣刀
- Fresas Rabo de Andorinha Invertidas
- Fresa para cola de milano invertida
- Inverse Dovetail Cutters

C831	▪	1.1	1.2	1.3	1.4	1.5	1.6	2.1	2.2	2.3	3.1	3.2	3.3	3.4	4.1	4.2	4.3	5.1	5.2	5.3	6.1
		6.2	6.3	6.4	7.1	7.2	7.3	7.4	8.1	10.1											

C831 HSS-E N Z 10-12 λ0° γ0° DIN 1835B js16 DIN 1833D

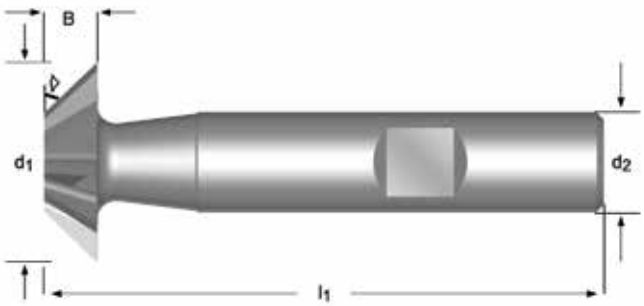

C831

12.00 - 32.00

▷	B mm	d_1 Ø mm	l_1 mm	d_2 Øh_6 mm	z	C831
45°	3.5	12.0	54	10	10	C83112.0X45
45°	4.0	16.0	60	12	10	C83116.0X45
45°	5.0	20.0	63	12	10	C83120.0X45
45°	6.3	25.0	67	12	10	C83125.0X45
45°	8.0	32.0	71	16	12	C83132.0X45
60°	5.0	12.0	54	10	10	C83112.0X60
60°	6.3	16.0	60	12	10	C83116.0X60
60°	8.0	20.0	63	12	10	C83120.0X60
60°	10.0	25.0	67	12	10	C83125.0X60
60°	12.5	32.0	71	16	12	C83132.0X60

C710

- 圆弧倒角铣刀
- Fresa com Canto Arredondado
- Fresas frontales de perfil cóncavo
- Corner Rounding Cutter

C710																				
▪	1.1	1.2	1.3	1.4	2.1	2.2	3.1	3.2	3.3	3.4	4.1	4.2	5.1	5.2	6.1	6.2	6.3	7.1	7.2	7.3
•	1.5	1.6	2.3	4.3	5.3	6.4	7.4	10.1												

C710 HSS N Z 4 λ0° γ0° BS 122/4

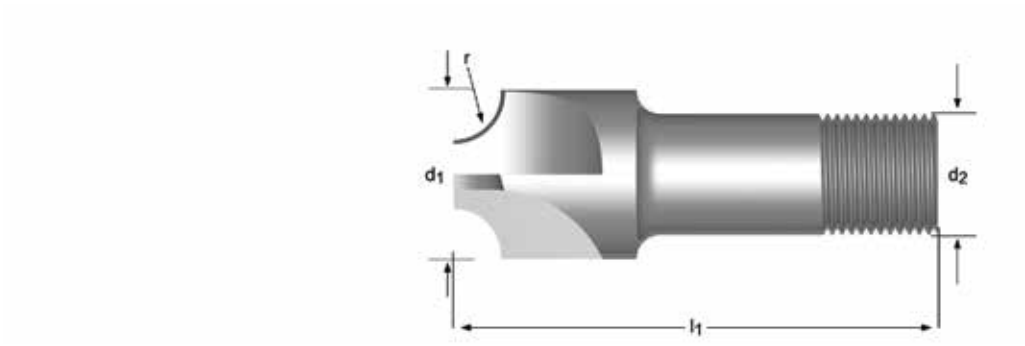

C710

1/16 - 1/2

r Inch	d_1 Ø Inch	d_2 Øh_8 Inch	d_2 Ø mm	l_1 mm	z	C710
1/16	3/8	3/8	9.53	60.5	4	C7101/16
1/8	1/2	1/2	12.70	60.5	4	C7101/8
5/32	9/16	1/2	12.70	60.5	4	C7105/32
3/16	5/8	5/8	15.88	60.5	4	C7103/16
1/4	7/8	5/8	15.88	63.5	4	C7101/4
3/8	1.1/16	1“	25.40	76.0	4	C7103/8
1/2	1.3/8	1“	25.40	82.5	4	C7101/2

C700

- 圆弧倒角铣刀
- Fresa com Canto Arredondado
- Fresas frontales de perfil cóncavo
- Corner Rounding Cutter

C700 ▪ 1.1 1.2 1.3 1.4 1.5 1.6 2.1 2.2 2.3 3.1 3.2 3.3 3.4 4.1 4.2 4.3 5.1 5.2 5.3 6.1 6.2 6.3 6.4 7.1 7.2 7.3 7.4 10.1

C700 HSS-E | N | Z 4-6 | λ0° γ0° | DIN 1835B

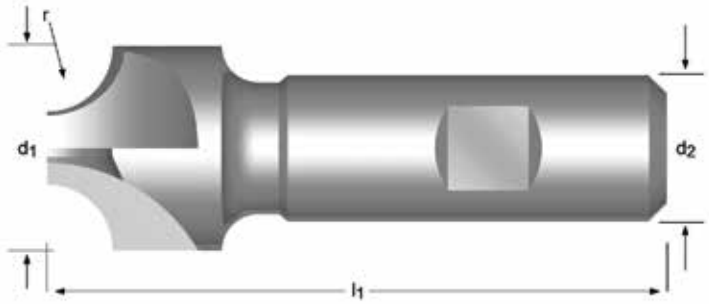

C700

1.00 - 20.00

r mm	d_1 Ø mm	d_2 Øh_6 mm	l_1 mm	z	C700
1.00	10	10	60	4	C7001.0
1.50	10	10	60	4	C7001.5
2.00	10	10	60	4	C7002.0
2.50	10	10	60	4	C7002.5
3.00	12	12	60	4	C7003.0
3.50	12	12	60	4	C7003.5
4.00	15	12	60	4	C7004.0
5.00	18	16	70	4	C7005.0
6.00	21	16	70	4	C7006.0
7.00	24	16	70	4	C7007.0
8.00	24	16	70	4	C7008.0
9.00	28	20	85	4	C7009.0
10.00	28	20	85	4	C70010.0
12.00	35	20	100	4	C70012.0
12.50	35	20	100	4	C70012.5
14.00	42	25	100	4	C70014.0
15.00	48	25	105	5	C70015.0
16.00	48	25	105	5	C70016.0
20.00	60	32	115	6	C70020.0

DORMER

D200
D763

- 三面刃铣刀
- Fresa de Faceamento Lateral
- Fresa para ranurar
- Side and Face Milling Cutter

D200; D763 ▪ 1.1 1.2 1.3 1.4 1.5 1.6 2.1 2.2 2.3 3.1 3.2 3.3 3.4 4.1 4.2 4.3 5.1 5.2 5.3 6.1 6.2 6.3 6.4 7.1 7.2 7.3 7.4 8.1

D200	HSS-E			Z 16-30		λ15° γ10°			js16		DIN 885A
D763	HSS-E			Z 28-44		λ15° γ10°			js16		DIN 885A

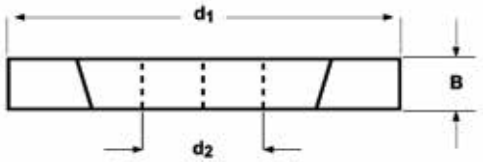

D200	D763
	
50.00 - 200.00	63.00 - 125.00

d_1 Ø mm	B mm	d_2 Ø mm	z	D200	D763
50.00	10.0	16	16	D20050.0X10.0	
50.00	4.0	16	16	D20050.0X4.0	
50.00	5.0	16	16	D20050.0X5.0	
50.00	6.0	16	16	D20050.0X6.0	
50.00	8.0	16	16	D20050.0X8.0	
63.00	1.6	22	32		D76363.0X1.6
63.00	10.0	22	18	D20063.0X10.0	
63.00	12.0	22	18	D20063.0X12.0	
63.00	14.0	22	18	D20063.0X14.0	
63.00	16.0	22	16	D20063.0X16.0	
63.00	2.0	22	32		D76363.0X2.0
63.00	2.5	22	32		D76363.0X2.5
63.00	3.0	22	28		D76363.0X3.0
63.00	3.5	22	28		D76363.0X3.5
63.00	4.0	22	18	D20063.0X4.0	
63.00	5.0	22	18	D20063.0X5.0	
63.00	6.0	22	18	D20063.0X6.0	
63.00	8.0	22	18	D20063.0X8.0	
80.00	10.0	27	18	D20080.0X10.0	
80.00	12.0	27	18	D20080.0X12.0	
80.00	14.0	27	18	D20080.0X14.0	
80.00	16.0	27	18	D20080.0X16.0	
80.00	2.0	27	36		D76380.0X2.0
80.00	2.5	27	36		D76380.0X2.5
80.00	20.0	27	18	D20080.0X20.0	
80.00	3.0	27	32		D76380.0X3.0
80.00	3.5	27	32		D76380.0X3.5
80.00	4.0	27	20	D20080.0X4.0	
80.00	5.0	27	20	D20080.0X5.0	
80.00	6.0	27	20	D20080.0X6.0	
80.00	8.0	27	20	D20080.0X8.0	
100.00	10.0	32	22	D200100.0X10.0	
100.00	12.0	32	20	D200100.0X12.0	
100.00	14.0	32	20	D200100.0X14.0	

d_1 Ø mm	B mm	d_2 Ø mm	z	D200	D763
100.00	16.0	32	20	D200100.0X16.0	
100.00	18.0	32	20	D200100.0X18.0	
100.00	2.0	32	44		D763100.0X2.0
100.00	2.5	32	44		D763100.0X2.5
100.00	20.0	32	20	D200100.0X20.0	
100.00	25.0	32	20	D200100.0X25.0	
100.00	3.0	32	40		D763100.0X3.0
100.00	3.5	32	40		D763100.0X3.5
100.00	4.0	32	24	D200100.0X4.0	
100.00	5.0	32	24	D200100.0X5.0	
100.00	6.0	32	24	D200100.0X6.0	
100.00	8.0	32	22	D200100.0X8.0	
125.00	10.0	32	24	D200125.0X10.0	
125.00	12.0	32	22	D200125.0X12.0	
125.00	14.0	32	22	D200125.0X14.0	
125.00	16.0	32	22	D200125.0X16.0	
125.00	2.0	32	44		D763125.0X2.0
125.00	2.5	32	44		D763125.0X2.5
125.00	20.0	32	22	D200125.0X20.0	
125.00	25.0	32	22	D200125.0X25.0	
125.00	3.0	32	44		D763125.0X3.0
125.00	3.5	32	40		D763125.0X3.5
125.00	4.0	32	40		D763125.0X4.0
125.00	6.0	32	26	D200125.0X6.0	
125.00	8.0	32	26	D200125.0X8.0	
160.00	10.0	40	26	D200160.0X10.0	
160.00	12.0	40	26	D200160.0X12.0	
160.00	14.0	40	24	D200160.0X14.0	
160.00	16.0	40	24	D200160.0X16.0	
160.00	18.0	40	24	D200160.0X18.0	
160.00	20.0	40	24	D200160.0X20.0	
160.00	8.0	40	28	D200160.0X8.0	
200.00	12.0	40	30	D200200.0X12.0	
200.00	16.0	40	30	D200200.0X16.0	
200.00	20.0	40	30	D200200.0X20.0	

DORMER

D745

- 粗齿的锯片铣刀
- Serra Circular para Abertura de Rasgos Largos
- Sierras de ranurar o tronzar paso grueso
- Metal slitting saw Coarse

D745															
	■	1.1	1.2	1.3	1.4	3.1	3.2	3.3	6.1	6.2	6.3	7.1	7.2	7.3	8.1
	•	2.1	2.2												

D745 HSS Z 28-100 γ15° DIN 1838

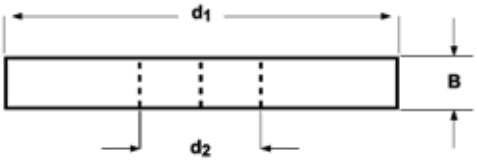

D745

50.00 - 315.00

d_1 Ø mm	B mm	d_2 Ø mm	z	D745
50.00	0.5	13	48	D74550.0X.5
50.00	0.6	13	48	D74550.0X.6
50.00	0.8	13	40	D74550.0X.8
50.00	1.0	13	40	D74550.0X1.0
50.00	1.2	13	40	D74550.0X1.2
50.00	1.5	13	32	D74550.0X1.5
50.00	1.6	13	32	D74550.0X1.6
50.00	2.0	13	32	D74550.0X2.0
50.00	2.5	13	32	D74550.0X2.5
50.00	3.0	13	24	D74550.0X3.0
63.00	0.5	16	64	D74563.0X.5
63.00	0.6	16	48	D74563.0X.6
63.00	0.8	16	48	D74563.0X.8
63.00	1.0	16	48	D74563.0X1.0
63.00	1.2	16	40	D74563.0X1.2
63.00	1.5	16	40	D74563.0X1.5
63.00	1.6	16	40	D74563.0X1.6
63.00	2.0	16	40	D74563.0X2.0
63.00	2.5	16	32	D74563.0X2.5
63.00	3.0	16	32	D74563.0X3.0
80.00	0.5	22	64	D74580.0X.5
80.00	0.6	22	64	D74580.0X.6
80.00	0.8	22	64	D74580.0X.8
80.00	1.0	22	48	D74580.0X1.0
80.00	1.2	22	48	D74580.0X1.2
80.00	1.5	22	48	D74580.0X1.5
80.00	1.6	22	48	D74580.0X1.6
80.00	2.0	22	40	D74580.0X2.0
80.00	2.5	22	40	D74580.0X2.5
80.00	3.0	22	40	D74580.0X3.0
80.00	4.0	22	32	D74580.0X4.0
80.00	5.0	22	32	D74580.0X5.0
80.00	6.0	22	32	D74580.0X6.0
100.00	0.5	22	80	D745100.0X.5
100.00	0.6	22	80	D745100.0X.6
100.00	0.8	22	64	D745100.0X.8
100.00	1.0	22	64	D745100.0X1.0
100.00	1.2	22	64	D745100.0X1.2

d_1 Ø mm	B mm	d_2 Ø mm	z	D745
100.00	1.5	22	48	D745100.0X1.5
100.00	1.6	22	48	D745100.0X1.6
100.00	2.0	22	48	D745100.0X2.0
100.00	2.5	22	48	D745100.0X2.5
100.00	3.0	22	40	D745100.0X3.0
100.00	4.0	22	40	D745100.0X4.0
100.00	5.0	22	40	D745100.0X5.0
100.00	6.0	22	32	D745100.0X6.0
125.00	1.0	22	80	D745125.0X1.0
125.00	1.2	22	64	D745125.0X1.2
125.00	1.5	22	64	D745125.0X1.5
125.00	1.6	22	64	D745125.0X1.6
125.00	2.0	22	64	D745125.0X2.0
125.00	2.5	22	48	D745125.0X2.5
125.00	3.0	22	48	D745125.0X3.0
125.00	4.0	22	48	D745125.0X4.0
125.00	5.0	22	40	D745125.0X5.0
125.00	6.0	22	40	D745125.0X6.0
160.00	1.0	32	80	D745160.0X1.0
160.00	1.2	32	80	D745160.0X1.2
160.00	1.5	32	80	D745160.0X1.5
160.00	1.6	32	80	D745160.0X1.6
160.00	2.0	32	64	D745160.0X2.0
160.00	2.5	32	64	D745160.0X2.5
160.00	3.0	32	64	D745160.0X3.0
160.00	4.0	32	48	D745160.0X4.0
160.00	5.0	32	48	D745160.0X5.0
160.00	6.0	32	48	D745160.0X6.0
200.00	1.0	32	100	D745200.0X1.0
200.00	1.2	32	100	D745200.0X1.2
200.00	1.5	32	80	D745200.0X1.5
200.00	1.6	32	80	D745200.0X1.6
200.00	2.0	32	80	D745200.0X2.0
200.00	2.5	32	80	D745200.0X2.5
200.00	3.0	32	64	D745200.0X3.0
200.00	4.0	32	64	D745200.0X4.0
200.00	5.0	32	64	D745200.0X5.0
200.00	6.0	32	48	D745200.0X6.0
250.00	2.0	32	100	D745250.0X2.0
250.00	2.5	32	80	D745250.0X2.5
250.00	3.0	32	80	D745250.0X3.0
250.00	4.0	32	80	D745250.0X4.0
250.00	5.0	32	64	D745250.0X5.0
250.00	6.0	32	64	D745250.0X6.0
315.00	2.5	40	100	D745315.0X2.5
315.00	3.0	40	100	D745315.0X3.0

D747

- 细齿的锯片铣刀
- Serra Circular para Abertura de Rasgos Finos
- Sierras de ranurar o tronzar paso fino
- Metal slitting saw Fine

D747															
	▪	1.1	1.2	1.3	1.4	3.1	3.2	3.3	6.1	6.2	6.3	7.1	7.2	7.3	8.1
	•	2.1	2.2												

D747 HSS Z 40-200 γ 5° DIN 1837

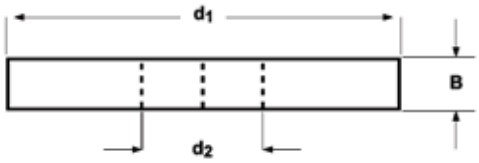

D747

32.00 - 315.00

d_1 Ø mm	B mm	d_2 Ø mm	z	D747
32.00	0.3	8	80	D74732.0X.3
32.00	0.4	8	80	D74732.0X.4
32.00	0.5	8	80	D74732.0X.5
32.00	0.6	8	64	D74732.0X.6
32.00	0.8	8	64	D74732.0X.8
32.00	1.0	8	64	D74732.0X1.0
32.00	1.2	8	48	D74732.0X1.2
32.00	1.5	8	48	D74732.0X1.5
32.00	1.6	8	48	D74732.0X1.6
32.00	2.0	8	48	D74732.0X2.0
32.00	2.5	8	40	D74732.0X2.5
32.00	3.0	8	40	D74732.0X3.0
40.00	0.3	10	100	D74740.0X.3
40.00	0.4	10	100	D74740.0X.4
40.00	0.5	10	80	D74740.0X.5
40.00	0.6	10	80	D74740.0X.6
40.00	0.8	10	80	D74740.0X.8
40.00	1.0	10	64	D74740.0X1.0
40.00	1.2	10	64	D74740.0X1.2
40.00	1.5	10	64	D74740.0X1.5
40.00	1.6	10	64	D74740.0X1.6
40.00	2.0	10	48	D74740.0X2.0
40.00	2.5	10	48	D74740.0X2.5
40.00	3.0	10	48	D74740.0X3.0
50.00	0.3	13	128	D74750.0X.3
50.00	0.4	13	100	D74750.0X.4
50.00	0.5	13	100	D74750.0X.5
50.00	0.6	13	100	D74750.0X.6
50.00	0.8	13	80	D74750.0X.8
50.00	1.0	13	80	D74750.0X1.0
50.00	1.2	13	80	D74750.0X1.2
50.00	1.5	13	64	D74750.0X1.5
50.00	1.6	13	64	D74750.0X1.6
50.00	2.0	13	64	D74750.0X2.0
50.00	2.5	13	64	D74750.0X2.5
50.00	3.0	13	48	D74750.0X3.0
50.00	4.0	13	48	D74750.0X4.0
50.00	5.0	13	48	D74750.0X5.0

d_1 Ø mm	B mm	d_2 Ø mm	z	D747
50.00	6.0	13	40	D74750.0X6.0
63.00	0.3	16	128	D74763.0X.3
63.00	0.4	16	128	D74763.0X.4
63.00	0.5	16	128	D74763.0X.5
63.00	0.6	16	100	D74763.0X.6
63.00	0.8	16	100	D74763.0X.8
63.00	1.0	16	100	D74763.0X1.0
63.00	1.2	16	80	D74763.0X1.2
63.00	1.5	16	80	D74763.0X1.5
63.00	1.6	16	80	D74763.0X1.6
63.00	2.0	16	80	D74763.0X2.0
63.00	2.5	16	64	D74763.0X2.5
63.00	3.0	16	64	D74763.0X3.0
63.00	4.0	16	64	D74763.0X4.0
63.00	5.0	16	48	D74763.0X5.0
63.00	6.0	16	48	D74763.0X6.0
80.00	0.4	22	160	D74780.0X.4
80.00	0.5	22	128	D74780.0X.5
80.00	0.6	22	128	D74780.0X.6
80.00	0.8	22	128	D74780.0X.8
80.00	1.0	22	100	D74780.0X1.0
80.00	1.2	22	100	D74780.0X1.2
80.00	1.5	22	100	D74780.0X1.5
80.00	1.6	22	100	D74780.0X1.6
80.00	2.0	22	80	D74780.0X2.0
80.00	2.5	22	80	D74780.0X2.5
80.00	3.0	22	80	D74780.0X3.0
80.00	4.0	22	64	D74780.0X4.0
80.00	5.0	22	64	D74780.0X5.0
80.00	6.0	22	64	D74780.0X6.0
100.00	0.5	22	160	D747100.0X.5
100.00	0.6	22	160	D747100.0X.6
100.00	0.8	22	128	D747100.0X.8
100.00	1.0	22	128	D747100.0X1.0
100.00	1.2	22	128	D747100.0X1.2
100.00	1.5	22	100	D747100.0X1.5
100.00	1.6	22	100	D747100.0X1.6
100.00	2.0	22	100	D747100.0X2.0
100.00	2.5	22	100	D747100.0X2.5
100.00	3.0	22	80	D747100.0X3.0
100.00	4.0	22	80	D747100.0X4.0
100.00	5.0	22	80	D747100.0X5.0
100.00	6.0	22	64	D747100.0X6.0
125.00	1.0	22	160	D747125.0X1.0
125.00	1.2	22	128	D747125.0X1.2
125.00	1.5	22	128	D747125.0X1.5
125.00	1.6	22	128	D747125.0X1.6
125.00	2.0	22	128	D747125.0X2.0
125.00	2.5	22	100	D747125.0X2.5
125.00	3.0	22	100	D747125.0X3.0
125.00	4.0	22	100	D747125.0X4.0
125.00	5.0	22	80	D747125.0X5.0
125.00	6.0	22	80	D747125.0X6.0
160.00	1.0	32	160	D747160.0X1.0
160.00	1.2	32	160	D747160.0X1.2
160.00	1.5	32	160	D747160.0X1.5
160.00	1.6	32	160	D747160.0X1.6
160.00	2.0	32	128	D747160.0X2.0
160.00	2.5	32	128	D747160.0X2.5
160.00	3.0	32	128	D747160.0X3.0
160.00	4.0	32	100	D747160.0X4.0
160.00	5.0	32	100	D747160.0X5.0
160.00	6.0	32	100	D747160.0X6.0
200.00	1.0	32	200	D747200.0X1.0
200.00	1.2	32	200	D747200.0X1.2
200.00	1.5	32	160	D747200.0X1.5
200.00	1.6	32	160	D747200.0X1.6
200.00	2.0	32	160	D747200.0X2.0
200.00	2.5	32	160	D747200.0X2.5
200.00	3.0	32	128	D747200.0X3.0

d_1 Ø mm	B mm	d_2 Ø mm	z	D747
200.00	4.0	32	128	D747200.0X4.0
200.00	5.0	32	128	D747200.0X5.0
200.00	6.0	32	100	D747200.0X6.0
250.00	2.0	32	200	D747250.0X2.0
250.00	2.5	32	160	D747250.0X2.5
250.00	3.0	32	160	D747250.0X3.0
250.00	4.0	32	160	D747250.0X4.0
250.00	5.0	32	128	D747250.0X5.0
250.00	6.0	32	128	D747250.0X6.0
315.00	2.5	40	200	D747315.0X2.5
315.00	3.0	40	200	D747315.0X3.0
315.00	4.0	40	160	D747315.0X4.0
315.00	5.0	40	160	D747315.0X5.0
315.00	6.0	40	160	D747315.0X6.0

D752
D753

- 粗齿的锯片铣刀
- Serra Circular para Abertura de Rasgos Largos
- Sierras de ranurar o tronzar paso grueso
- Metal slitting saw Coarse

D752; D753

■	1.1	1.2	1.3	1.4	3.1	3.2	3.3	6.1	6.2	6.3	7.1	7.2	7.3	8.1
•	2.1	2.2												

D752	HSS			Z 80-180		γ18°		ST			DORMER
D753	HSS			Z 100-140		γ18°		ST			DORMER

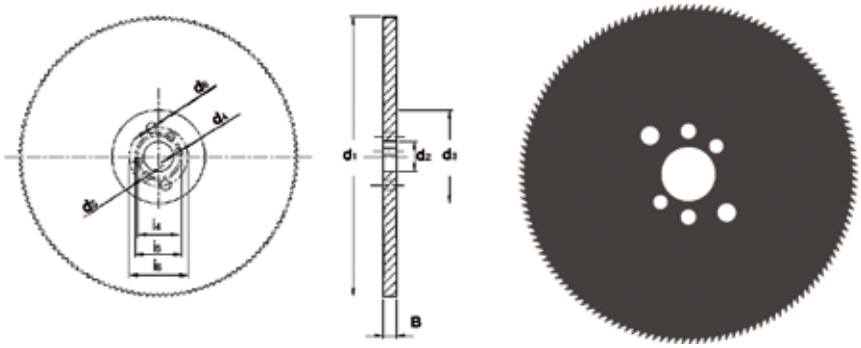

D752	D753
	
200.00 - 350.00	250.00 - 350.00

d_1 Ø mm	B mm	d_2 Ø mm	z	P mm	d_3 Ø mm	d_4 Ø mm	i_4 mm	d_5 Ø mm	i_5 mm	d_6 Ø mm	i_6 mm	D752	D753
200	1.8	32	100	6	100	8	45	9	50	11	63	D752200.0X1.8X100	
200	1.8	32	80	8	100	8	45	9	50	11	63	D752200.0X1.8X80	
225	2.0	32	120	6	100	8	45	9	50	11	63	D752225.0X2.0X120	
225	2.0	32	90	8	100	8	45	9	50	11	63	D752225.0X2.0X90	
250	2.0	32	100	8	100	8	45	9	50	11	63		D753250.0X2.0
250	2.0	32	128	6	100	8	45	9	50	11	63	D752250.0X2.0X128	
275	2.5	32	110	8	100	8	45	9	50	11	63	D752275.0X2.5X110	
300	2.5	32	120	8	100	8	45	9	50	11	63		D753300.0X2.5
300	2.5	32	160	6	100	8	45	9	50	11	63	D752300.0X2.5X160	
315	2.5	32	120	8	100	8	45	9	50	11	63		D753315.0X2.5
315	2.5	32	160	6	100	8	45	9	50	11	63	D752315.0X2.5X160	
350	2.5	32	140	8	120	8	45	9	50	11	63		D753350.0X2.5
350	2.5	32	180	6	120	8	45	9	50	11	63	D752350.0X2.5X180	

D750
D751

- 粗齿的锯片铣刀
- Serra Circular para Abertura de Rasgos Largos
- Sierras de ranurar o tronzar paso grueso
- Metal slitting saw Coarse

D750; D751														
▪	1.1	1.2	1.3	1.4	3.1	3.2	3.3	6.1	6.2	6.3	7.1	7.2	7.3	8.1
•	2.1	2.2												

D750	HSS			Z 128-220		γ18°		ST			DORMER
D751	HSS			Z 160-350		γ18°		ST			DORMER

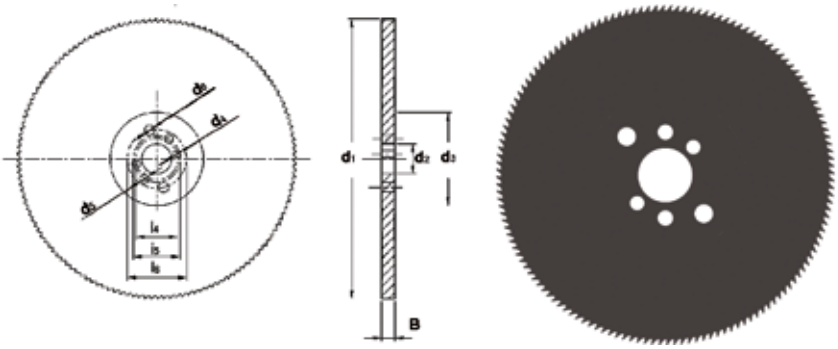

D750	D751
	
200.00 - 350.00	200.00 - 350.00

d_1 Ø mm	B mm	d_2 Ø mm	z	P mm	d_3 Ø mm	d_4 Ø mm	i_4 mm	d_5 Ø mm	i_5 mm	d_6 Ø mm	i_6 mm	D750	D751
200	1.8	32	130	5	100	8	45	9	50	11	63	D750200.0X1.8	
200	1.8	32	160	4	100	8	45	9	50	11	63		D751200.0X1.8X160
200	1.8	32	200	3	100	8	45	9	50	11	63		D751200.0X1.8X200
225	2.0	32	140	5	100	8	45	9	50	11	63	D750225.0X2.0	
225	2.0	32	180	4	100	8	45	9	50	11	63		D751225.0X2.0X180
225	2.0	32	220	3	100	8	45	9	50	11	63		D751225.0X2.0X220
250	2.0	32	160	5	100	8	45	9	50	11	63	D750250.0X2.0	
250	2.0	32	200	4	100	8	45	9	50	11	63		D751250.0X2.0X200
250	2.0	32	250	3	100	8	45	9	50	11	63		D751250.0X2.0X250
275	2.5	32	180	5	100	8	45	9	50	11	63	D750275.0X2.5	
275	2.5	32	220	4	100	8	45	9	50	11	63		D751275.0X2.5X220
275	2.5	32	280	3	100	8	45	9	50	11	63		D751275.0X2.5X280
300	2.5	32	180	5	100	8	45	9	50	11	63	D750300.0X2.5	
300	2.5	32	220	4	100	8	45	9	50	11	63		D751300.0X2.5X220
300	2.5	32	300	3	100	8	45	9	50	11	63		D751300.0X2.5X300
315	2.5	32	200	5	100	8	45	9	50	11	63	D750315.0X2.5	
315	2.5	32	240	4	100	8	45	9	50	11	63		D751315.0X2.5X240
315	2.5	32	320	3	100	8	45	9	50	11	63		D751315.0X2.5X320
350	2.5	32	220	5	120	8	45	9	59	11	63	D750350.0X2.5	
350	2.5	32	280	4	120	8	45	9	50	11	63		D751350.0X2.5X280
350	2.5	32	350	3	120	8	45	9	50	11	63		D751350.0X2.5X350

D400
D420

- 套式立铣刀
- Fresa Caracol
- Fresas frontales con agujero
- Shell End Mill

D400	▪	1.1 1.2 1.3 1.4 2.1 2.3 3.1 3.2 3.3 3.4 4.1 5.1 6.1 6.2 6.3 7.2 7.3
	•	1.5 1.6 2.2 4.2 4.3 5.2 5.3 6.4 7.1 7.4 8.1 8.2 8.3 10.1
D420	▪	1.1 1.2 1.3 1.4 1.5 1.6 2.1 2.2 2.3 3.1 3.2 3.3 3.4 4.1 4.2 4.3 5.1 5.2 5.3 6.1 6.2 6.3 6.4 7.2 7.3 7.4 8.1 10.1
	•	7.1 8.2 8.3

D400	HSS-E		N	Z 8-12		λ30° γ12°			js16		DIN 1880
D420	HSS-E		N	Z 8-12		λ30° γ12°		TiCN	js16		DIN 1880

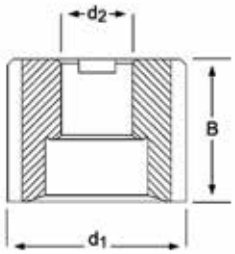

D400

40.00 - 100.00

D420

40.00 - 100.00

d_1 Ø mm	B mm	d_2 Ø mm	z	D400	D420
40.00	32	16	8	D40040.0	D42040.0
50.00	36	22	8	D40050.0	D42050.0
63.00	40	27	8	D40063.0	D42063.0
80.00	45	27	10	D40080.0	D42080.0
100.00	50	32	12	D400100.0	D420100.0

D402
D422

- 粗加工立铣刀
- Fresa Caracol para Desbaste
- Fresas frontales con agujero de desbaste
- Roughing Shell End Mill

D402	▪	1.1 1.2 1.3 1.4 2.1 2.3 3.1 3.2 3.3 3.4 4.1 5.1 6.1 6.2 6.3 7.2 7.3
	•	1.5 1.6 2.2 4.2 4.3 5.2 5.3 6.4 7.1 7.4 8.1 8.2 8.3 10.1
D422	▪	1.1 1.2 1.3 1.4 1.5 1.6 2.1 2.2 2.3 3.1 3.2 3.3 3.4 4.1 4.2 4.3 5.1 5.2 5.3 6.1 6.2 6.3 6.4 7.2 7.3 7.4 8.1 10.1
	•	7.1 8.2 8.3

D402	HSS-E		NR	Z 6-10		λ30° γ12°			js16		DIN 1880
D422	HSS-E		NR	Z 6-10		λ30° γ12°		TiCN	js16		DIN 1880

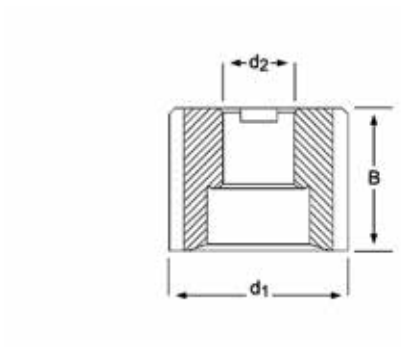

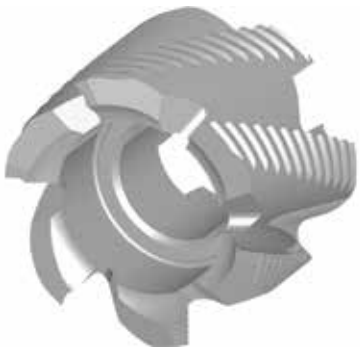

D402	D422
	
40.00 - 100.00	40.00 - 100.00

d_1 Ø mm	B mm	d_2 Ø mm	z	D402	D422
40.00	32	16	6	D40240.0	D42240.0
50.00	36	22	6	D40250.0	D42250.0
63.00	40	27	8	D40263.0	D42263.0
80.00	45	27	8	D40280.0	D42280.0
100.00	50	32	10	D402100.0	D422100.0

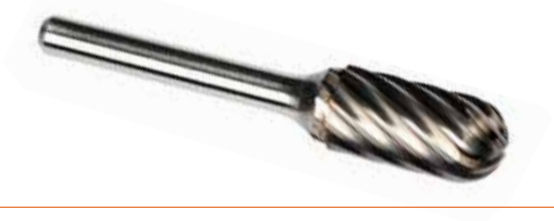

DORMER

	材料	Material	Material	Material
	应用	Aplicação	Aplicaciones	Application
	端切	Corte no Topo	Corte frontal	End cut
	涂层	Tratamento	Tratamiento superficial	Coating
	顶角	Ângulo de Ponta	º de la punta	Point Angle
	类型	Tipo	Tipo	Type
	标准	Norma	Estándar	Standard
■	性能卓越	Excelente para a Aplicação	Excelente para Aplicación	Excellent for Application
●	性能良好	Bom para a Aplicação	Bueno para Aplicación	Good for Application
	实例 10 = 外缘处的切削速度，米/分，+/- 10%	Exemplo 10 = Velocidade periférica em metros/minuto +/- 10%	Ejemplo 10 = Velocidad Periférica en metros/minuto +/- 10%	Example 10 = Peripheral speed in metres/minute +/- 10%
	产品型号 尺寸范围	Código Gama de medidas	Código de producto Rango de Diámetros	Product Codes Size Range

AMG	中文	Português	Español	English
1.1	铁磁性低碳钢	Aço macio magnético	Acero blando	Magnetic soft steel
1.2	结构钢, 表面渗碳钢	Aço estrutural, Aço cementado	Acero de construcción/cementación	Structural steel, case carburizing steel
1.3	普通碳钢	Aço-carbono	Acero al carbono	Plain Carbon steel
1.4	合金钢	Aço de liga	Acero aleado	Alloy steel
1.5	合金钢, 淬火回火钢	Aço de liga, Aço temperado	Acero aleado/temple y revenido	Alloy steel, Hardened and tempered steel
1.6	合金钢, 淬火回火钢	Aço de liga, Aço temperado	Acero aleado/temple y revenido	Alloy steel, Hardened and tempered steel
1.7	热处理合金钢	Aço de liga temperado	Acero aleado cementado	Alloy steel, Heat treated
1.8	淬火合金钢, 耐磨钢	Aço de liga temperado	Acero aleado cementado	Alloy steel, Hardened & Wear resistant steel
2.1	易切削不锈钢	Aço inoxidável de maquinagem fácil	Acero inoxidable fácil mecanizado	Free machining, Stainless Steel
2.2	奥氏体不锈钢	Austenítico	Austenítico	Austenitic
2.3	铁素体 + 奥氏体, 马氏体不锈钢	Ferrítico + Austenítico + Martensítico	Ferritico, Ferr. + Aust., Marten	Ferritic + Austenitic, Ferritic, Martensitic
2.4	沉淀硬化不锈钢	Aço inoxidável de fácil usinagem	Acero Inoxidable Templado	Precipitation Hardened
3.1	灰铸铁	Grafite laminar	Con grafito laminar	Lamellar graphite
3.2	灰铸铁	Grafite laminar	Con grafito laminar	Lamellar graphite
3.3	球墨铸铁, 可锻铸铁	Grafite nodular/ Ferro fundido maleável	Con graf. laminar, fundic. maleable	Nodular graphite, Malleable Cast Iron
3.4	球墨铸铁, 可锻铸铁	Grafite nodular/ Ferro fundido maleável	Con graf. laminar, fundic. maleable	Nodular graphite, Malleable Cast Iron
4.1	纯钛	Titânio, sem liga	Titanio no aleado	Titanium, unalloyed
4.2	钛合金	Titânio, com liga	Titanio aleado	Titanium, alloyed
4.3	钛合金	Titânio, com liga	Titanio aleado	Titanium, alloyed
5.1	纯镍	Níquel, sem liga	Níquel no aleado	Nickel, unalloyed
5.2	镍合金	Níquel, com liga	Níquel aleado	Nickel, alloyed
5.3	镍合金	Níquel, com liga	Níquel aleado	Nickel, alloyed
6.1	紫铜	Cobre	Cobre	Copper
6.2	β黄铜, 青铜	Latão beta, bronze	β-Latón, bronce	β-Brass, Bronze
6.3	α黄铜	Latão alfa	α-Latón	α-Brass
6.4	高强度青铜	Bronze de alta resistência	Metal AMPCO	High Strength Bronze
7.1	纯铝, 纯镁	Al, Mg, sem liga	Al, Mg, no aleado	Al, Mg, unalloyed
7.2	铝合金, 硅含量 < 0.5%	Al com liga, Si<0.5%	Al aleado con Si < 0.5%	Al alloyed, Si < 0.5%
7.3	铝合金, 硅含量 > 0.5% < 10%	Al com liga, Si>0.5%<10%	Al aleado con Si > 0.5% < 10%	Al alloyed, Si > 0.5% < 10%
7.4	铝合金, 硅含量 > 10% 晶须增强铝合金, 镁合金	Al com liga, Si>10% reforçadas com monocristais filiformes, ligas de Al/Mg	Al aleado, Si>10% Reforzado por filamentos, Al-aleados, Mg-aleados	Al alloyed, Si > 10% Whisker reinforced Al-alloys Mg-alloys
8.1	调整字体大小, 适应排版需要	Termoplásticos	Termoplásticos	Thermoplastics
8.2	热固性塑料	Plásticos termoduros	Plásticos endurecidos por calor	Thermosetting plastics
8.3	增强塑料	Materiais plásticos reforçados	Materiales plásticos reforzados	Reinforced plastic materials
9.1	金属陶瓷	Cerametal (metalocerâmica)	Cerametales (metales-cerámicas)	Cermets (metals-ceramics)
10.1	标准石墨	Grafite standard	Grafito standard	Graphite

	HM	HM	HM	HM	HM	HM	HM	HM	HM	HM	HM	HM	HM	HM	HM	HM
	A	A	A	A	A	B	B	B	B	C	C	C	C	C	D	D
		TiAlN					TiAlN				TiAlN					TiAlN
	DC	DC	ST	VA	AL	DC	DC	ST	AL	DC	DC	ST	VA	AL	DC	DC
																
	P801	P801C	P701	P601	P831	P803	P803C	P703	P833	P805	P805C	P705	P605	P835	P807	P807C
	3.00 - 16.00	3.00 - 12.70	6.00 - 12.70	3.00 - 12.70	6.00 - 12.70	3.00 - 16.00	3.00 - 12.70	6.00 - 12.70	6.00 - 12.70	3.00 - 16.00	3.00 - 12.70	6.00 - 12.70	3.00 - 12.70	6.00 - 12.70	3.00 - 16.00	3.00 - 12.70
AMG	501	501	502	502	502	503	503	504	504	505	505	506	506	506	507	507	ISO
1.1	■	■	■			■	■	■		■	■	■			■	■	P 1
1.2	■	■	■			■	■	■		■	■	■			■	■	P 1
1.3	■	■	■			■	■	■		■	■	■			■	■	P 2
1.4	■	■	■			■	■	■		■	■	■			■	■	P 3
1.5	■	■	■			■	■	■		■	■	■			■	■	P 4
1.6	■	■	■			■	■	■		■	■	■			■	■	H 1
1.7	■	■				■	■			■	■				■	■	H 3
1.8	■	■				■	■			■	■				■	■	H 4
2.1	■	■		■	•	■	■		•	■	■		■	•	■	■	M 1
2.2	■	■		■		■	■			■	■		■		■	■	M 3
2.3	■	■		■		■	■			■	■		■		■	■	M 2
2.4	■	■		■		■	■			■	■		■		■	■	S 2
3.1	■	■				■	■			■	■				■	■	K 1
3.2	■	■				■	■			■	■				■	■	K 2
3.3	■	■				■	■			■	■				■	■	K 3
3.4	■	■				■	■			■	■				■	■	K 4
4.1	■	■			•	■	■		•	■	■			•	■	■	S 1
4.2	■	■				■	■			■	■				■	■	S 2
4.3	■	■				■	■			■	■				■	■	S 3
5.1	■	■			•	■	■		•	■	■			•	■	■	S 1
5.2	■	■				■	■			■	■				■	■	S 2
5.3	■	■				■	■			■	■				■	■	S 3
6.1	•	•				•	•			•	•				•	•	N 3
6.2	■	■			•	■	■		•	■	■			•	■	■	N 4
6.3	■	■				■	■			■	■				■	■	N 3
6.4	■	■				■	■			■	■				■	■	N 4
7.1					■				■					■			N 1
7.2					■				■					■			N 1
7.3					■				■					■			N 1
7.4					■				■					■			N 2
8.1					■				■					■			O
8.2					■				■					■			O
8.3					■				■					■			O
9.1	■	■				■	■			■	■				■	■	H
10.1																	O

DORMER

HM	HM	HM	HM	HM	HM	HM	HM	HM	HM	HM	HM	HM	HM	HM	HM	
D	D	D	E	E	E	F	F	F	F	F	G	G	G	G	H	
							TiAlN					TiAlN				
ST	VA	AL	DC	ST	VA	DC	DC	ST	VA	AL	DC	DC	ST	VA	DC	
P707	P607	P837	P809	P709	P609	P811	P811C	P711	P611	P841	P813	P813C	P713	P613	P815	
6.00 - 12.70	3.00 - 12.70	6.00 - 12.70	3.00 - 16.00	12.70	8.00 - 12.70	3.00 - 16.00	3.00 - 12.70	6.00 - 12.70	3.00 - 12.70	6.00 - 12.70	3.00 - 16.00	3.00 - 12.70	6.00 - 12.70	6.00 - 12.70	3.00 - 16.00	
AMG 508	508	508	509	510	510	511	511	512	512	512	513	513	514	514	515	ISO
1.1	■			■	■		■	■	■			■	■	■		■	P 1
1.2	■			■	■		■	■	■			■	■	■		■	P 1
1.3	■			■	■		■	■	■			■	■	■		■	P 2
1.4	■			■	■		■	■	■			■	■	■		■	P 3
1.5	■			■	■		■	■	■			■	■	■		■	P 4
1.6	■			■	■		■	■	■			■	■	■		■	H 1
1.7				■			■	■				■	■			■	H 3
1.8				■			■	■				■	■			■	H 4
2.1		■	●	■		■	■	■		■	●	■	■		■	■	M 1
2.2		■		■		■	■	■		■		■	■		■	■	M 3
2.3		■		■		■	■	■		■		■	■		■	■	M 2
2.4		■		■		■	■	■		■		■	■		■	■	S 2
3.1				■			■	■				■	■			■	K 1
3.2				■			■	■				■	■			■	K 2
3.3				■			■	■				■	■			■	K 3
3.4				■			■	■				■	■			■	K 4
4.1			●	■			■	■			●	■	■			■	S 1
4.2				■			■	■				■	■			■	S 2
4.3				■			■	■				■	■			■	S 3
5.1			●	■			■	■			●	■	■			■	S 1
5.2				■			■	■				■	■			■	S 2
5.3				■			■	■				■	■			■	S 3
6.1				●			●	●				●	●			●	N 3
6.2			●	■			■	■			●	■	■			■	N 4
6.3				■			■	■				■	■			■	N 3
6.4				■			■	■				■	■			■	N 4
7.1			■								■						N 1
7.2			■								■						N 1
7.3			■								■						N 1
7.4			■								■						N 2
8.1			■								■						O
8.2			■								■						O
8.3			■								■						O
9.1				■			■	■				■	■			■	H
10.1																	O

	HM	HM	HM	HM	HM	HM	HM	HM	HM	HM	HM	HM	HM	HM
	H	H	H	J	K	L	L	L	L	L	M	N		
	TiAlN						TiAlN							
				60°	90°								135°	180°
	DC	ST	VA	DC	DC	DC	DC	ST	VA	AL	DC	DC	GRP	GRP
	DORMER	DORMER	DORMER	DORMER	DORMER	DORMER	DORMER	DORMER	DORMER	DORMER	DORMER	DORMER	DORMER	DORMER
														
	P815C	P715	P615	P817	P819	P821	P821C	P721	P621	P842	P823	P825	P843	P844
	8.00 - 12.70	8.00 - 12.70	8.00 - 12.70	3.00 - 16.00	3.00 - 16.00	3.00 - 16.00	3.00 - 12.70	10.00 - 12.70	8.00 - 12.70	6.00 - 12.70	3.00 - 16.00	3.00 - 16.00	3.00 - 8.00	3.00 - 8.00
AMG	515	516	516	517	518	519	519	520	520	520	521	522	523	524	ISO
1.1	■	■		■	■	■	■	■			■	■			P 1
1.2	■	■		■	■	■	■	■			■	■			P 1
1.3	■	■		■	■	■	■	■			■	■			P 2
1.4	■	■		■	■	■	■	■			■	■			P 3
1.5	■	■		■	■	■	■	■			■	■			P 4
1.6	■	■		■	■	■	■	■			■	■			H 1
1.7	■			■	■	■	■				■	■			H 3
1.8	■			■	■	■	■				■	■			H 4
2.1	■		■	■	■	■	■		■	•	■	■			M 1
2.2	■		■	■	■	■	■		■		■	■			M 3
2.3	■		■	■	■	■	■		■		■	■			M 2
2.4	■		■	■	■	■	■		■		■	■			S 2
3.1	■			■	■	■	■				■	■			K 1
3.2	■			■	■	■	■				■	■			K 2
3.3	■			■	■	■	■				■	■			K 3
3.4	■			■	■	■	■				■	■			K 4
4.1	■			■	■	■	■			•	■	■			S 1
4.2	■			■	■	■	■				■	■			S 2
4.3	■			■	■	■	■				■	■			S 3
5.1	■			■	■	■	■			•	■	■			S 1
5.2	■			■	■	■	■				■	■			S 2
5.3	■			■	■	■	■				■	■			S 3
6.1	•			•	•	•	•				•	•			N 3
6.2	■			■	■	■	■			•	■	■			N 4
6.3	■			■	■	■	■				■	■			N 3
6.4	■			■	■	■	■				■	■			N 4
7.1										■					N 1
7.2										■					N 1
7.3										■					N 1
7.4										■					N 2
8.1										■			■	■	O
8.2										■			■	■	O
8.3										■			■	■	O
9.1	■			■	■	■	■				■	■			H
10.1															O

DORMER

	P880	P890	
	Set	Set	
AMG	525	526	ISO
1.1			P 1
1.2			P 1
1.3			P 2
1.4			P 3
1.5			P 4
1.6			H 1
1.7			H 3
1.8			H 4
2.1			M 1
2.2			M 3
2.3			M 2
2.4			S 2
3.1			K 1
3.2			K 2
3.3			K 3
3.4			K 4
4.1			S 1
4.2			S 2
4.3			S 3
5.1			S 1
5.2			S 2
5.3			S 3
6.1			N 3
6.2			N 4
6.3			N 3
6.4			N 4
7.1			N 1
7.2			N 1
7.3			N 1
7.4			N 2
8.1			O
8.2			O
8.3			O
9.1			H
10.1			O

AL DC

RPM / min

AMG	ISO	d_1 Ø mm 3	6	8	10	12	16	20	
1.1 - 1.5	P	64 000	32 000	24 000	20 000	16 000	12 000	10 000	min
		83 000	42 000	32 000	25 000	21 000	16 000	13 000	max
1.6 - 1.8	H	51 000	26 000	20 000	16 000	13 000	10 000	8 000	min
		71 000	36 000	27 000	22 000	18 000	14 000	11 000	max
2	M	45 000	23 000	17 000	14 000	12 000	9 000	7 000	min
		64 000	32 000	24 000	20 000	16 000	12 000	10 000	max
3	K	58 000	29 000	22 000	19 000	15 000	11 000	9 000	min
		77 000	39 000	29 000	23 000	20 000	15 000	12 000	max
4	S 1	45 000	23 000	17 000	14 000	12 000	9 000	7 000	min
		58 000	29 000	22 000	18 000	15 000	11 000	9 000	max
5	S 1	45 000	23 000	17 000	14 000	12 000	9 000	7 000	min
		58 000	29 000	22 000	18 000	15 000	11 000	9 000	max
6	N	64 000	32 000	24 000	20 000	16 000	12 000	10 000	min
		71 000	36 000	27 000	22 000	18 000	14 000	11 000	max
7	N	71 000	36 000	27 000	22 000	18 000	14 000	11 000	min
		96 000	48 000	36 000	29 000	24 000	18 000	15 000	max
8	O	77 000	39 000	29 000	23 000	20 000	15 000	12 000	min
		96 000	48 000	36 000	29 000	24 000	18 000	15 000	max

ST

AMG	ISO		d_1 Ø mm 3	6	10	12
1	P	Max	100 000	65 000	55 000	35 000
		Low	60 000	45 000	30 000	20 000
		High	80 000	60 000	40 000	30 000

VA

AMG	ISO		d_1 Ø mm 3	6	10	12
2	M	Max	100 000	65 000	55 000	35 000
		Low	60 000	30 000	20 000	15 000
		High	80 000	45 000	30 000	22 000

GRP

AMG	ISO		d_1 Ø mm 2	3	4	6	10	12
8	O	Low	40 000	25 000	20 000	20 000	15 000	10 000
		High	45 000	30 000	25 000	25 000	20 000	22 000

P801
P801C

- 整体硬质合金旋转锉- 圆柱直柄没有端切
- Lima Rotativa - Cilíndrica sem Corte no Topo
- Limas rotativas - Cilíndrica sin corte frontal
- Rotary Burr - Cylinder without endcut

铜焊达到6.00mm
Soldada acima de 6.00mm
Soldada sobre 6.00 mm
Brazed above 6.00 mm

P801; P801C

▪ 1.1 1.2 1.3 1.4 1.5 1.6 1.7 1.8 2.1 2.2 2.3 2.4 3.1 3.2 3.3 3.4 4.1 4.2 4.3 5.1 5.2 5.3 6.2 6.3 6.4 9.1

• 6.1

P801 HM A DC

P801C HM A TiAlN DC

P801	P801C
	
3.00 - 16.00	3.00 - 12.70

d_1 Ø mm	d_2 Øh_7 mm	l_2 mm	l_1 mm	P801	P801C
3.00	3	14	38	P8013.0X3.0 [1]	P801C3.0X3.0 [1]
6.30	3	12.7	45	P8016.3X3.0	
6.00	6	18	50	P8016.0X6.0 [1]	P801C6.0X6.0 [1]
8.00	6	19	64	P8018.0X6.0	P801C8.0X6.0
9.60	6	19	64	P8019.6X6.0	P801C9.6X6.0
12.70	6	25	70	P80112.7X6.0	P801C12.7X6.0
16.00	6	25	70	P80116.0X6.0	

[1] d2 公差 h6 / d2 tolerância h6 / d2 tolerancia h6 / d2 tolerance h6

P701 P601 P831

- 整体硬质合金旋转锉- 圆柱直柄没有端切
- Lima Rotativa - Cilíndrica sem Corte no Topo
- Limas rotativas - Cilíndrica sin corte frontal
- Rotary Burr - Cylinder without endcut

铜焊达到6.00mm
Soldada acima de 6.00mm
Soldada sobre 6.00 mm
Brazed above 6.00 mm

P701	▪	1.1 1.2 1.3 1.4 1.5 1.6
P601	▪	2.1 2.2 2.3 2.4
P831	▪	7.1 7.2 7.3 7.4 8.1 8.2 8.3
	•	2.1 4.1 5.1 6.2

P701	HM	A					ST	DORMER	
P601	HM	A					VA	DORMER	P880 525
P831	HM	A					AL	DORMER	

P701	P601	P831
		
6.00 - 12.70	3.00 - 12.70	6.00 - 12.70

d_1 Ø mm	d_2 Øh_7 mm	l_2 mm	l_1 mm	P701	P601	P831
3.00	3	14	38		P6013.0X3.0 [1]	
6.30	3	12.7	45		P6016.3X3.0	
6.00	6	18	50	P7016.0X6.0 [1]	P6016.0X6.0 [1]	P8316.0X6.0 [1]
8.00	6	19	64	P7018.0X6.0	P6018.0X6.0	
9.60	6	19	64	P7019.6X6.0	P6019.6X6.0	P8319.6X6.0
12.70	6	25	70	P70112.7X6.0	P60112.7X6.0	P83112.7X6.0

[1] d2 公差 h6 / d2 tolerância h6 / d2 tolerancia h6 / d2 tolerance h6

P803
P803C

- 整体硬质合金旋转锉- 圆柱直柄有端切
- Lima Rotativa - Cilíndrica com Corte no Topo
- Lima rotativa - Cilíndrica con corte frontal
- Rotary Burr - Cylinder with endcut

铜焊达到6.00mm
Soldada acima de 6.00mm
Soldada sobre 6.00 mm
Brazed above 6.00 mm

P803; P803C

▪ 1.1 1.2 1.3 1.4 1.5 1.6 1.7 1.8 2.1 2.2 2.3 2.4 3.1 3.2 3.3 3.4 4.1 4.2 4.3 5.1 5.2 5.3 6.2 6.3 6.4 9.1

• 6.1

P803 HM B DC DORMER P880 525 P890 526

P803C HM B TiAlN DC DORMER P880 525

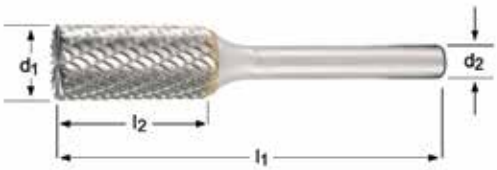

P803	P803C
	
3.00 - 16.00	3.00 - 12.70

d_1 Ø mm	d_2 Øh_7 mm	l_2 mm	l_1 mm	P803	P803C
3.00	3	14	38	P8033.0X3.0 [1]	P803C3.0X3.0 [1]
6.30	3	12.7	45	P8036.3X3.0	
6.00	6	18	50	P8036.0X6.0 [1]	P803C6.0X6.0 [1]
8.00	6	19	64	P8038.0X6.0	P803C8.0X6.0
9.60	6	19	64	P8039.6X6.0	P803C9.6X6.0
12.70	6	25	70	P80312.7X6.0	P803C12.7X6.0
16.00	6	25	70	P80316.0X6.0	

[1] d2 公差 h6 / d2 tolerância h6 / d2 tolerancia h6 / d2 tolerance h6

P703
P833

- 整体硬质合金旋转锉- 圆柱直柄有端切
- Lima Rotativa - Cilíndrica com Corte no Topo
- Lima rotativa - Cilíndrica con corte frontal
- Rotary Burr - Cylinder with endcut

铜焊达到6.00mm
Soldada acima de 6.00mm
Soldada sobre 6.00 mm
Brazed above 6.00 mm

P703	▪	1.1 1.2 1.3 1.4 1.5 1.6
P833	▪	7.1 7.2 7.3 7.4 8.1 8.2 8.3
	•	2.1 4.1 5.1 6.2

P703	HM	B					ST	DORMER	P880 525
P833	HM	B					AL	DORMER	

P703	P833
	
6.00 - 12.70	6.00 - 12.70

d_1 Ø mm	d_2 Øh_7 mm	l_2 mm	l_1 mm	P703	P833
6.00	6	18	50	P7036.0X6.0 [1]	P8336.0X6.0 [1]
8.00	6	19	64	P7038.0X6.0	
9.60	6	19	64	P7039.6X6.0	P8339.6X6.0
12.70	6	25	70	P70312.7X6.0	P83312.7X6.0

[1] d2 公差 h6 / d2 tolerância h6 / d2 tolerancia h6 / d2 tolerance h6

P805
P805C

- 整体硬质合金旋转锉- 圆柱直柄球头
- Lima Rotativa - Cilíndrica com Topo Esférico
- Lima Rotativa - Cilíndrica con Punta Esférica
- Rotary Burr - Ball Nosed Cylinder

铜焊达到6.00mm
Soldada acima de 6.00mm
Soldada sobre 6.00 mm
Brazed above 6.00 mm

P805; P805C

▪ 1.1 1.2 1.3 1.4 1.5 1.6 1.7 1.8 2.1 2.2 2.3 2.4 3.1 3.2 3.3 3.4 4.1 4.2 4.3 5.1 5.2 5.3 6.2 6.3 6.4 9.1

• 6.1

P805 HM C DC

P805C HM C TiAlN DC

P805	P805C
	
3.00 - 16.00	3.00 - 12.70

d_1 Ø mm	d_2 Øh_7 mm	l_2 mm	l_1 mm	P805	P805C
3.00	3	14	38	P8053.0X3.0 [1]	P805C3.0X3.0 [1]
6.30	3	12.7	45	P8056.3X3.0	
6.00	6	18	50	P8056.0X6.0 [1]	P805C6.0X6.0 [1]
8.00	6	19	64	P8058.0X6.0	P805C8.0X6.0
9.60	6	19	64	P8059.6X6.0	P805C9.6X6.0
12.70	6	25	70	P80512.7X6.0	P805C12.7X6.0
16.00	6	25	70	P80516.0X6.0	

[1] d2 公差 h6 / d2 tolerância h6 / d2 tolerancia h6 / d2 tolerance h6

P705 P605 P835

- 整体硬质合金旋转锉- 圆柱直柄球头
- Lima Rotativa - Cilíndrica com Topo Esférico
- Lima Rotativa - Cilíndrica con Punta Esférica
- Rotary Burr - Ball Nosed Cylinder

铜焊达到6.00mm
Soldada acima de 6.00mm
Soldada sobre 6.00 mm
Brazed above 6.00 mm

P705	▪	1.1 1.2 1.3 1.4 1.5 1.6
P605	▪	2.1 2.2 2.3 2.4
P835	▪	7.1 7.2 7.3 7.4 8.1 8.2 8.3
	•	2.1 4.1 5.1 6.2

P705	HM	C					ST	DORMER	P880 525
P605	HM	C					VA	DORMER	P880 525
P835	HM	C					AL	DORMER	

P705	P605	P835
		
6.00 - 12.70	3.00 - 12.70	6.00 - 12.70

d_1 Ø mm	d_2 Øh_7 mm	l_2 mm	l_1 mm	P705	P605	P835
3.00	3	14	38		P6053.0X3.0 [1]	
6.30	3	12.7	45		P6056.3X3.0	
6.00	6	18	50	P7056.0X6.0 [1]	P6056.0X6.0 [1]	P8356.0X6.0 [1]
8.00	6	19	64	P7058.0X6.0	P6058.0X6.0	
9.60	6	19	64	P7059.6X6.0	P6059.6X6.0	P8359.6X6.0
12.70	6	25	70	P70512.7X6.0	P60512.7X6.0	P83512.7X6.0

[1] d2 公差 h6 / d2 tolerância h6 / d2 tolerancia h6 / d2 tolerance h6

P807
P807C

- 整体硬质合金旋转锉- 球头
- Lima Rotativa - Esférica
- Lima Rotativa - Esférica
- Rotary Burr - Ball

铜焊达到6.00mm
Soldada acima de 6.00mm
Soldada sobre 6.00 mm
Brazed above 6.00 mm

P807; P807C	▪	1.1 1.2 1.3 1.4 1.5 1.6 1.7 1.8 2.1 2.2 2.3 2.4 3.1 3.2 3.3 3.4 4.1 4.2 4.3 5.1 5.2 5.3 6.2 6.3 6.4 9.1
	•	6.1

P807	HM	D					DC	DORMER	P880 525
P807C	HM	D			TiAlN		DC	DORMER	P880 525

P807	P807C
 3.00 - 16.00	 3.00 - 12.70

d_1 Ø mm	d_2 Øh_7 mm	l_2 mm	l_1 mm	P807	P807C
3.00	3	2.5	38	P8073.0X3.0 [1]	P807C3.0X3.0 [1]
4.00	3	3.4	38	P8074.0X3.0 [1]	
6.30	3	5	38	P8076.3X3.0	
6.00	6	4.7	50	P8076.0X6.0 [1]	P807C6.0X6.0 [1]
8.00	6	6	52	P8078.0X6.0	P807C8.0X6.0
9.60	6	8	54	P8079.6X6.0	P807C9.6X6.0
12.70	6	11	56	P80712.7X6.0	P807C12.7X6.0
16.00	6	14	59	P80716.0X6.0	

[1] d2 公差 h6 / d2 tolerância h6 / d2 tolerancia h6 / d2 tolerance h6

P707 P607 P837

- 整体硬质合金旋转锉- 球头
- Lima Rotativa - Esférica
- Lima Rotativa - Esférica
- Rotary Burr - Ball

铜焊达到6.00mm
Soldada acima de 6.00mm
Soldada sobre 6.00 mm
Brazed above 6.00 mm

P707	▪	1.1 1.2 1.3 1.4 1.5 1.6
P607	▪	2.1 2.2 2.3 2.4
P837	▪	7.1 7.2 7.3 7.4 8.1 8.2 8.3
	•	2.1 4.1 5.1 6.2

P707	HM	D					ST	DORMER	P880 525
P607	HM	D					VA	DORMER	P880 525
P837	HM	D					AL	DORMER	

P707	P607	P837
		
6.00 - 12.70	3.00 - 12.70	6.00 - 12.70

d_1 Ø mm	d_2 Øh_7 mm	l_2 mm	l_1 mm	P707	P607	P837
3.00	3	2.5	38		P6073.0X3.0 [1]	
6.30	3	5	38		P6076.3X3.0	
6.00	6	4.7	50	P7076.0X6.0 [1]	P6076.0X6.0 [1]	P8376.0X6.0 [1]
8.00	6	6	52	P7078.0X6.0	P6078.0X6.0	
9.60	6	8	54	P7079.6X6.0	P6079.6X6.0	P8379.6X6.0
12.70	6	11	56	P70712.7X6.0	P60712.7X6.0	P83712.7X6.0

[1] d2 公差 h6 / d2 tolerância h6 / d2 tolerancia h6 / d2 tolerance h6

P809

- 整体硬质合金旋转锉- 椭圆
- Lima Rotativa - Oval
- Lima Rotativa - Ovalada
- Rotary Burr - Oval

铜焊达到6.00mm
Soldada acima de 6.00mm
Soldada sobre 6.00 mm
Brazed above 6.00 mm

P809																					
	▪	1.1	1.2	1.3	1.4	1.5	1.6	1.7	1.8	2.1	2.2	2.3	2.4	3.1	3.2	3.3	3.4	4.1	4.2	4.3	5.1
		5.2	5.3	6.2	6.3	6.4	9.1														
	•	6.1																			

P809 HM E DC

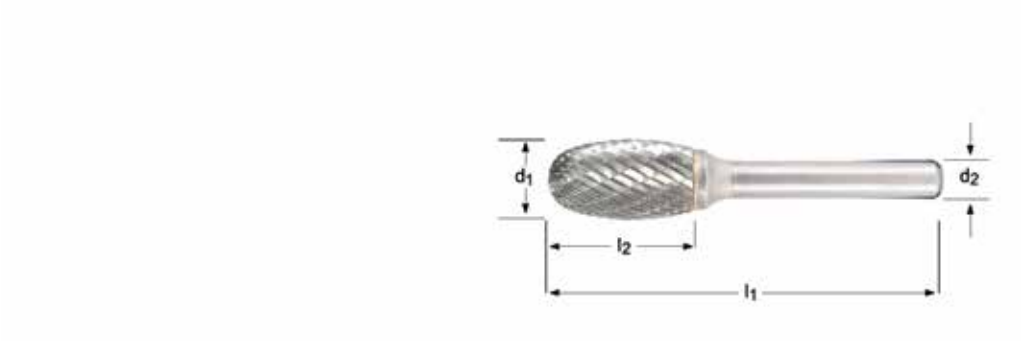

P809

3.00 - 16.00

d_1 Ø mm	d_2 Øh_7 mm	l_2 mm	l_1 mm	P809
3.00	3	6	38	P8093.0X3.0 [1]
6.30	3	9.5	42	P8096.3X3.0
6.00	6	10	50	P8096.0X6.0 [1]
8.00	6	15	60	P8098.0X6.0
9.60	6	16	60	P8099.6X6.0
12.70	6	22	67	P80912.7X6.0
16.00	6	25	70	P80916.0X6.0

[1] d2 公差 h6 / d2 tolerância h6 / d2 tolerancia h6 / d2 tolerance h6

DORMER

P709
- 整体硬质合金旋转锉- 椭圆
- Lima Rotativa - Oval

铜焊
Soldada

P609
- Lima Rotativa - Ovalada
- Rotary Burr - Oval

Soldada
Brazed

P709	▪	1.1 1.2 1.3 1.4 1.5 1.6
P609	▪	2.1 2.2 2.3 2.4

P709	HM	E					ST	DORMER
P609	HM	E					VA	DORMER

P709	P609
	
12.70	8.00 - 12.70

d_1 Ø mm	d_2 Øh_7 mm	l_2 mm	l_1 mm	P709	P609
8.00	6	15	60		P6098.0X6.0
9.60	6	16	60		P6099.6X6.0
12.70	6	22	67	P70912.7X6.0	P60912.7X6.0

P811
P811C

- 整体硬质合金旋转锉- 球头树状
- Lima Rotativa - Tipo Árvore Arredondada
- Lima Rotativa - Arbol con Punta Esférica
- Rotary Burr - Ball Nosed Tree

铜焊达到6.00mm
Soldada acima de 6.00mm
Soldada sobre 6.00 mm
Brazed above 6.00 mm

P811; P811C

▪ 1.1 1.2 1.3 1.4 1.5 1.6 1.7 1.8 2.1 2.2 2.3 2.4 3.1 3.2 3.3 3.4 4.1 4.2 4.3 5.1 5.2 5.3 6.2 6.3 6.4 9.1

• 6.1

P811 HM F DC DORMER P890 526

P811C HM F TiAlN DC DORMER P880 525

P811	P811C
	
3.00 - 16.00	3.00 - 12.70

d_1 Ø mm	d_2 Øh_7 mm	l_2 mm	l_1 mm	P811	P811C
3.00	3	14	38	P8113.0X3.0 [1]	P811C3.0X3.0 [1]
6.30	3	12.7	45	P8116.3X3.0	
6.00	6	18	50	P8116.0X6.0 [1]	P811C6.0X6.0 [1]
8.00	6	20	65	P8118.0X6.0	
9.60	6	19	64	P8119.6X6.0	P811C9.6X6.0
12.70	6	25	70	P81112.7X6.0	P811C12.7X6.0
16.00	6	25	70	P81116.0X6.0	

[1] d2 公差 h6 / d2 tolerância h6 / d2 tolerancia h6 / d2 tolerance h6

P711 P611 P841

- 整体硬质合金旋转锉- 球头树状
- Lima Rotativa - Tipo Árvore Arredondada
- Lima Rotativa - Arbol con Punta Esférica
- Rotary Burr - Ball Nosed Tree

铜焊达到6.00mm
Soldada acima de 6.00mm
Soldada sobre 6.00 mm
Brazed above 6.00 mm

P711	▪	1.1 1.2 1.3 1.4 1.5 1.6
P611	▪	2.1 2.2 2.3 2.4
P841	▪	7.1 7.2 7.3 7.4 8.1 8.2 8.3
	•	2.1 4.1 5.1 6.2

P711	HM	F					ST	DORMER	P880 525
P611	HM	F					VA	DORMER	P880 525
P841	HM	F					AL	DORMER	

P711	P611	P841
		
6.00 - 12.70	3.00 - 12.70	6.00 - 12.70

d_1 Ø mm	d_2 Øh_7 mm	l_2 mm	l_1 mm	P711	P611	P841
3.00	3	14	38		P6113.0X3.0 [1]	
6.30	3	12.7	45		P6116.3X3.0	
6.00	6	18	50	P7116.0X6.0 [1]	P6116.0X6.0 [1]	P8416.0X6.0 [1]
8.00	6	20	65	P7118.0X6.0	P6118.0X6.0	
9.60	6	19	64	P7119.6X6.0	P6119.6X6.0	P8419.6X6.0
12.70	6	25	70	P71112.7X6.0	P61112.7X6.0	P84112.7X6.0

[1] d2 公差 h6 / d2 tolerância h6 / d2 tolerancia h6 / d2 tolerance h6

P813
P813C

- 整体硬质合金旋转锉- 镶尖树状
- Lima Rotativa - Tipo Árvore Pontiaguda
- Lima Rotativa - Arbol con Punta
- Rotary Burr - Pointed Tree

铜焊达到6.00mm
Soldada acima de 6.00mm
Soldada sobre 6.00 mm
Brazed above 6.00 mm

P813; P813C																			
	▪	1.1	1.2	1.3	1.4	1.5	1.6	1.7	1.8	2.1	2.2	2.3	2.4	3.1	3.2	3.3	3.4	4.1	4.2
		4.3	5.1	5.2	5.3	6.2	6.3	6.4	9.1										
	•	6.1																	

P813	HM	G					DC	DORMER	P880 525	P890 526
P813C	HM	G			TiAlN		DC	DORMER	P880 525	

P813	P813C
	
3.00 - 16.00	3.00 - 12.70

d_1 Ø mm	d_2 Øh_7 mm	l_2 mm	l_1 mm	P813	P813C
3.00	3	14	38	P8133.0X3.0 [1]	P813C3.0X3.0 [1]
6.30	3	12.7	45	P8136.3X3.0	
6.00	6	18	50	P8136.0X6.0 [1]	P813C6.0X6.0 [1]
8.00	6	19	64	P8138.0X6.0	
9.60	6	19	64	P8139.6X6.0	P813C9.6X6.0
12.70	6	25	70	P81312.7X6.0	P813C12.7X6.0
16.00	6	25	70	P81316.0X6.0	

[1] d2 公差 h6 / d2 tolerância h6 / d2 tolerancia h6 / d2 tolerance h6

P713
P613

- 整体硬质合金旋转锉- 镶尖树状
- Lima Rotativa - Tipo Árvore Pontiaguda
- Lima Rotativa - Arbol con Punta
- Rotary Burr - Pointed Tree

铜焊达到6.00mm
Soldada acima de 6.00mm
Soldada sobre 6.00 mm
Brazed above 6.00 mm

P713	▪	1.1 1.2 1.3 1.4 1.5 1.6
P613	▪	2.1 2.2 2.3 2.4

P713	HM	G					ST	DORMER
P613	HM	G					VA	DORMER

P713	P613
	
6.00 - 12.70	6.00 - 12.70

d_1 Ø mm	d_2 Øh_7 mm	l_2 mm	l_1 mm	P713	P613
6.00	6	18	50	P7136.0X6.0 [1]	P6136.0X6.0 [1]
8.00	6	19	64	P7138.0X6.0	P6138.0X6.0
9.60	6	19	64	P7139.6X6.0	P6139.6X6.0
12.70	6	25	70	P71312.7X6.0	P61312.7X6.0

[1] d2 公差 h6 / d2 tolerância h6 / d2 tolerancia h6 / d2 tolerance h6

P815

- 整体硬质合金旋转锉- 发散 — 铜焊达到6.00mm
- Lima Rotativa - Tipo Labareda — Soldada acima de 6.00mm
- Lima Rotativa - Llama — Soldada sobre 6.00 mm
- Rotary Burr - Flame — Brazed above 6.00 mm

P815C

- 整体硬质合金旋转锉- 发散 — 铜焊
- Lima Rotativa - Tipo Labareda — Soldada
- Lima Rotativa - Llama — Soldada
- Rotary Burr - Flame — Brazed

P815; P815C

▪ 1.1 1.2 1.3 1.4 1.5 1.6 1.7 1.8 2.1 2.2 2.3 2.4 3.1 3.2 3.3 3.4 4.1 4.2 4.3 5.1 5.2 5.3 6.2 6.3 6.4 9.1

• 6.1

P815 HM H DC

P815C HM H TiAlN DC

P815	P815C
	
3.00 - 16.00	8.00 - 12.70

d_1 Ø mm	d_2 Øh_7 mm	l_2 mm	l_1 mm	P815	P815C
3.00	3	6	38	P8153.0X3.0 [1]	
6.00	6	14	50	P8156.0X6.0 [1]	
8.00	6	19	64	P8158.0X6.0	P815C8.0X6.0
9.60	6	19	65	P8159.6X6.0	
12.70	6	32	77	P81512.7X6.0	P815C12.7X6.0
16.00	6	36	81	P81516.0X6.0	

[1] d2 公差 h6 / d2 tolerância h6 / d2 tolerancia h6 / d2 tolerance h6

DORMER

P715
P615

- 整体硬质合金旋转锉- 发散
- Lima Rotativa - Tipo Labareda
- Lima Rotativa - Llama
- Rotary Burr - Flame

铜焊
Soldada
Soldada
Brazed

P715	▪	1.1 1.2 1.3 1.4 1.5 1.6
P615	▪	2.1 2.2 2.3 2.4

P715	HM	H					ST	DORMER
P615	HM	H					VA	DORMER

P715	P615
	
8.00 - 12.70	8.00 - 12.70

d_1 Ø mm	d_2 Øh_7 mm	l_2 mm	l_1 mm	P715	P615
8.00	6	19	64	P7158.0X6.0	P6158.0X6.0
9.60	6	19	65		P6159.6X6.0
12.70	6	32	77	P71512.7X6.0	P61512.7X6.0

P817

- 整体硬质合金旋转锉- 60°沉孔
- Lima Rotativa - Cônica 60°
- Lima Rotativa - Cónica 60°
- Rotary Burr - 60° Countersink

铜焊达到6.00mm
Soldada acima de 6.00mm
Soldada sobre 6.00 mm
Brazed above 6.00 mm

P817																					
▪	1.1	1.2	1.3	1.4	1.5	1.6	1.7	1.8	2.1	2.2	2.3	2.4	3.1	3.2	3.3	3.4	4.1	4.2	4.3	5.1
	5.2	5.3	6.2	6.3	6.4	9.1														
•	6.1																			

P817 HM J 60° DC DORMER

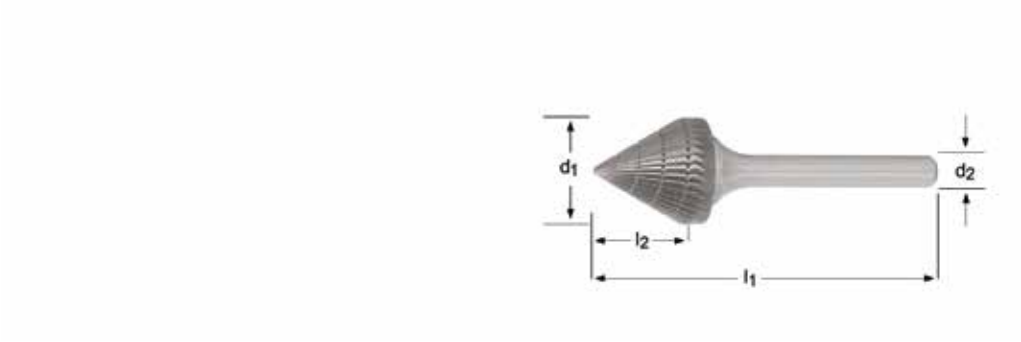

P817

3.00 - 16.00

d_1 Ø mm	d_2 Øh_7 mm	l_2 mm	l_1 mm	P817
3.00	3	2.5	38	P8173.0X3.0 [1]
6.00	6	4	50	P8176.0X6.0 [1]
9.60	6	8	56	P8179.6X6.0
12.70	6	11	59	P81712.7X6.0
16.00	6	14.5	63	P81716.0X6.0

[1] d2 公差 h6 / d2 tolerância h6 / d2 tolerancia h6 / d2 tolerance h6

P817

- 整体硬质合金旋转锉- 90°沉孔
- Lima Rotativa - Cônica 90°
- Lima Rotativa - Cónica 90°
- Rotary Burr - 90° Countersink

铜焊达到6.00mm
Soldada acima de 6.00mm
Soldada sobre 6.00 mm
Brazed above 6.00 mm

P819 ▪ 1.1 1.2 1.3 1.4 1.5 1.6 1.7 1.8 2.1 2.2 2.3 2.4 3.1 3.2 3.3 3.4 4.1 4.2 4.3 5.1 5.2 5.3 6.2 6.3 6.4 9.1

• 6.1

P819 HM K 90° DC DORMER

P819

3.00 - 16.00

d_1 Ø mm	d_2 Øh_7 mm	l_2 mm	l_1 mm	P819
3.00	3	1.5	38	P8193.0X3.0 [1]
6.00	6	3	50	P8196.0X6.0 [1]
9.60	6	4.7	53	P8199.6X6.0
12.70	6	6.3	55	P81912.7X6.0
16.00	6	8	57	P81916.0X6.0

[1] d2 公差 h6 / d2 tolerância h6 / d2 tolerancia h6 / d2 tolerance h6

P821
P821C

- 整体硬质合金旋转锉- 球头锥形
- Lima Rotativa - Cônica com Raio
- Lima Rotativa - Cónica con Punta Esférica
- Rotary Burr - Ball Nosed Cone

铜焊达到6.00mm
Soldada acima de 6.00mm
Soldada sobre 6.00 mm
Brazed above 6.00 mm

P821; P821C

▪ 1.1 1.2 1.3 1.4 1.5 1.6 1.7 1.8 2.1 2.2 2.3 2.4 3.1 3.2 3.3 3.4 4.1 4.2 4.3 5.1 5.2 5.3 6.2 6.3 6.4 9.1

• 6.1

P821 HM L DC DORMER P890 526

P821C HM L TiAlN DC DORMER

P821	P821C
	
3.00 - 16.00	3.00 - 12.70

d_1 Ø mm	d_2 Øh_7 mm	l_2 mm	l_1 mm	▷	P821	P821C
3.00	3	14	38	8°	P8213.0X3.0 [1]	P821C3.0X3.0 [1]
6.00	6	18	50	14°	P8216.0X6.0 [1]	
8.00	6	25.4	70	14°	P8218.0X6.0	
9.60	6	30	76	14°	P8219.6X6.0	
12.70	6	32	77	14°	P82112.7X6.0	P821C12.7X6.0
16.00	6	33	78	14°	P82116.0X6.0	

[1] d2 公差 h6 / d2 tolerância h6 / d2 tolerancia h6 / d2 tolerance h6

DORMER

P721
P621

- 整体硬质合金旋转锉- 球头锥形 — 铜焊
- Lima Rotativa - Cônica com Raio — Soldada
- Lima Rotativa - Cónica con Punta Esférica — Soldada
- Rotary Burr - Ball Nosed Cone — Brazed

P842

- 整体硬质合金旋转锉- 球头锥形 — 铜焊达到6.00mm
- Lima Rotativa - Cônica com Raio — Soldada acima de 6.00mm
- Lima Rotativa - Cónica con Punta Esférica — Soldada sobre 6.00 mm
- Rotary Burr - Ball Nosed Cone — Brazed above 6.00 mm

P721	▪	1.1 1.2 1.3 1.4 1.5 1.6
P621	▪	2.1 2.2 2.3 2.4
P842	▪	7.1 7.2 7.3 7.4 8.1 8.2 8.3
	•	2.1 4.1 5.1 6.2

P721	HM	L					ST	DORMER	P880 525
P621	HM	L					VA	DORMER	P880 525
P842	HM	L					AL	DORMER	

P721	P621	P842
		
10.00 - 12.70	8.00 - 12.70	6.00 - 12.70

d_1 Ø mm	d_2 Øh_7 mm	l_2 mm	l_1 mm	▷	P721	P621	P842
6.00	6	18	50	14°			P8426.0X6.0 [1]
8.00	6	25.4	70	14°		P6218.0X6.0	
10.00	6	20	65	14°	P72110.0X6.0	P62110.0X6.0	
9.60	6	30	76	14°	P7219.6X6.0		P8429.6X6.0
12.70	6	32	77	14°	P72112.7X6.0	P62112.7X6.0	P84212.7X6.0

[1] d2 公差 h6 / d2 tolerância h6 / d2 tolerancia h6 / d2 tolerance h6

P823

- 整体硬质合金旋转锉- 锥形
- Lima Rotativa - Cônica
- Lima Rotativa - Cónica con Punta Esférica
- Rotary Burr - Cone

铜焊达到6.00mm
Soldada acima de 6.00mm
Soldada sobre 6.00 mm
Brazed above 6.00 mm

P823																					
▪	1.1	1.2	1.3	1.4	1.5	1.6	1.7	1.8	2.1	2.2	2.3	2.4	3.1	3.2	3.3	3.4	4.1	4.2	4.3	5.1
	5.2	5.3	6.2	6.3	6.4	9.1														
•	6.1																			

P823 HM M DC DORMER

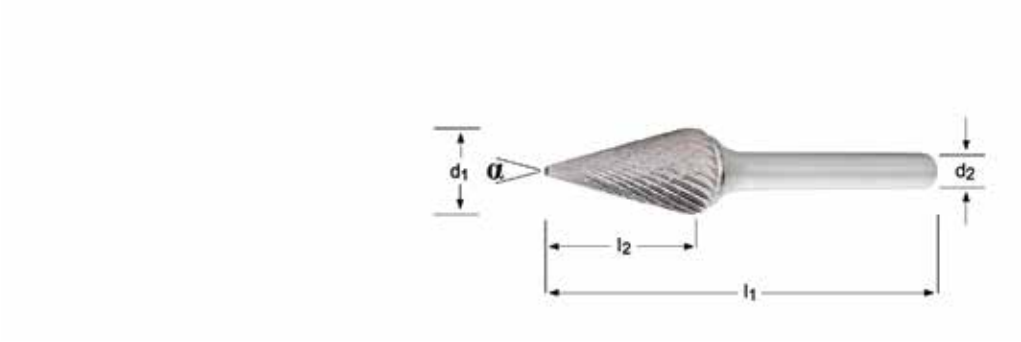

P823

3.00 - 16.00

d_1 Ø mm	d_2 Øh_7 mm	l_2 mm	l_1 mm	▷	P823
3.00	3	11	38	14°	P8233.0X3.0 [1]
6.30	3	12.7	49	22°	P8236.3X3.0
6.00	6	20	50	14°	P8236.0X6.0 [1]
9.60	6	16	64	28°	P8239.6X6.0
12.70	6	22	71	28°	P82312.7X6.0
16.00	6	25	71	31°	P82316.0X6.0

[1] d2 公差 h6 / d2 tolerância h6 / d2 tolerancia h6 / d2 tolerance h6

P825

- 整体硬质合金旋转锉- 倒锥形
- Lima Rotativa - Cônica Invertida
- Lima Rotativa - Cónica Invertida
- Rotary Burr - Inverted Cone

铜焊达到6.00mm
Soldada acima de 6.00mm
Soldada sobre 6.00 mm
Brazed above 6.00 mm

P825																					
	▪	1.1	1.2	1.3	1.4	1.5	1.6	1.7	1.8	2.1	2.2	2.3	2.4	3.1	3.2	3.3	3.4	4.1	4.2	4.3	5.1
		5.2	5.3	6.2	6.3	6.4	9.1														
	•	6.1																			

P825 HM N DC DORMER

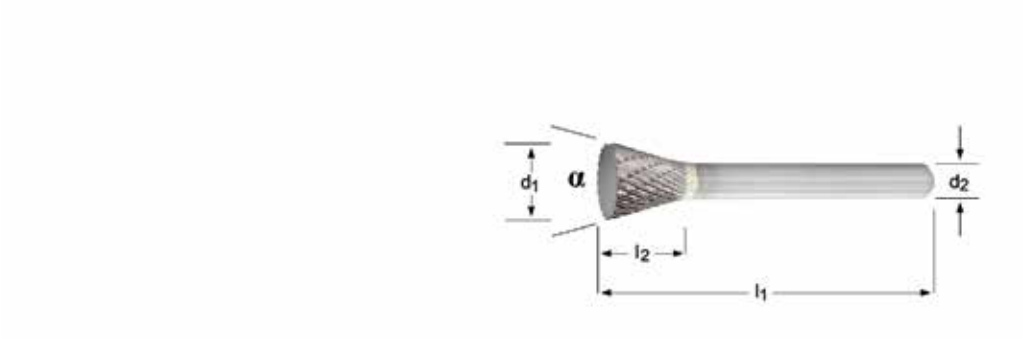

P825

3.00 - 16.00

d_1 Ø mm	d_2 Øh_7 mm	l_2 mm	l_1 mm	▷	P825
3.00	3	4	38	10°	P8253.0X3.0 [1]
6.30	3	6	39	12°	P8256.3X3.0
6.00	6	8	50	10°	P8256.0X6.0 [1]
9.60	6	9.5	55	16°	P8259.6X6.0
12.70	6	12.7	58	28°	P82512.7X6.0
16.00	6	19	64	18°	P82516.0X6.0

[1] d2 公差 h6 / d2 tolerância h6 / d2 tolerancia h6 / d2 tolerance h6

P843

- 切割钻石及复合材料 - 135°钻尖
- Lima rotativa com corte em forma de diamante – ponta de broca de 135°
- Corte de diamante con guía – Ángulo de la punta a 135°
- Diamond Cut Router - 135° Drill Point

P843 ▪ 8.1 8.2 8.3

P843 HM 135° GRP DORMER

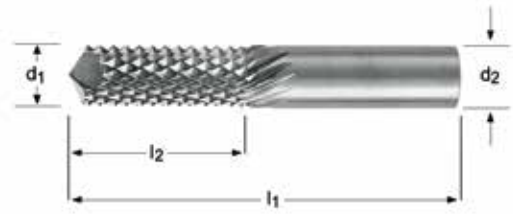

P843

3.00 - 8.00

d_1 Ø mm	d_2 Øh_6 mm	l_2 mm	l_1 mm	P843
3.00	3	13	45	P8433.0X3.0
6.00	6	19	63	P8436.0X6.0
8.00	8	25	63	P8438.0X8.0

P844

- 切割钻石及复合材料 - 立切
- Lima rotativa com corte em forma de diamante – corte com fresa de topo
- Corte de diamante con guía -Dentado frontal de dos cortes
- Diamond Cut Router - End Mill Cut

P844 ▪ 8.1 8.2 8.3

P844 HM 180° GRP DORMER

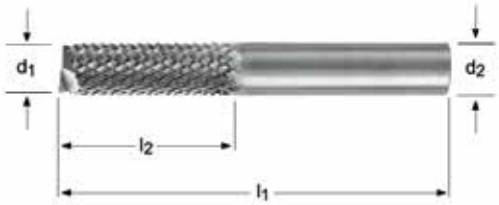

P844

3.00 - 8.00

d_1 Ø mm	d_2 Øh_6 mm	l_2 mm	l_1 mm	P844
3.00	3	13	45	P8443.0X3.0
6.00	6	19	63	P8446.0X6.0
8.00	8	25	63	P8448.0X8.0

P880

- 整体硬质合金旋转锉- 套装
- Jogo de Limas Rotativas
- Juego de Limas Rotativas
- Rotary Burr Set

A=套件中的型号, B=套件中的数量, C=套件中的直径
A=Tipos no jogo B=N° eno jogo C=Diâmetros no jogo
A=Tipos en el juego, B=No. en el Juego, C=Diámetros en el Juego
A=Styles in Set, B=No. in Set, C=Diameters in Set

P880

Set

Nr.	A	B	C	P880
Nr01	P803 + P805 + P807 + P809 + P813	5	P8039.6X6.0, P8059.6X6.0, P8079.6X6.0, P8099.6X6.0, P8139.6X6.0	P88001
Nr02	P803C + P805C + P807C + P811C + P813C	5	P803C9.6X6.0, P805C9.6X6.0, P807C9.6X6.0, P811C9.6X6.0, P813C9.6X6.0	P88002
Nr03	P601 + P605 + P607 + P611 + P621	5	P6019.6X6.0, P6059.6X6.0, P6079.6X6.0, P6119.6X6.0, P62110.0X6.0	P88003
Nr04	P703 + P705 + P707 + P711 + P721	5	P7039.6X6.0, P7059.6X6.0, P7079.6X6.0, P7119.6X6.0, P72110.0X6.0	P88004

P890

- 整体硬质合金旋转锉架子
- Display de Limas Rotativas
- Dispensador de Limas Rotativas
- Rotary Burr Dispenser

A=套件中的型号, B=套件中的数量, C=套件中的直径
A=Tipos no jogo B=N° eno jogo C=Diâmetros no jogo
A=Tipos en el juego, B=No. en el Juego, C=Diámetros en el Juego
A=Styles in Set, B=No. in Set, C=Diameters in Set

P890

Set

Nr.	A	B	C	P890
Nr01	P803 + P805 + P811 + P813 + P821	40	P803(6.0X6.0, 8.0X6.0, 9.6X6.0, 12.7X6.0) X 2, P805(6.0X6.0, 8.0X6.0, 9.6X6.0, 12.7X6.0) X 2, P811(6.0X6.0, 8.0X6.0, 9.6X6.0, 12.7X6.0) X 2, P813(6.0X6.0, 8.0X6.0, 9.6X6.0, 12.7X6.0) X 2, P821(6.0X6.0, 8.0X6.0, 9.6X6.0, 12.7X6.0) X 2	P89001

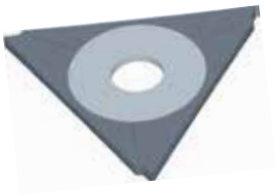

DORMER

	材料	Material	Material	Material
	涂层	Tratamento	Tratamiento superficial	Coating
	标准	Norma	Estándar	Standard
	刀刃角	Ângulo de corte	º de corte inclinado	Edge angle
	应用	Aplicação	Aplicaciones	Application
	切削方向	Direção de corte	Dirección de corte	Direction of cut
	刀片尺寸	Tamanho do inserto	Tamaño	Insert Size
■	性能卓越	Excelente para a Aplicação	Excelente para Aplicación	Excellent for Application
●	性能良好	Bom para a Aplicação	Bueno para Aplicación	Good for Application
	实例 10 = 外缘处的切削速度，米/分，+/- 10%	Exemplo 10 = Velocidade periférica em metros/minuto +/- 10%	Ejemplo 10 = Velocidad Periférica en metros/minuto +/- 10%	Example 10 = Peripheral speed in metres/minute +/- 10%
	产品型号	Código	Código de producto	Product Codes
	尺寸范围	Gama de medidas	Rango de Diámetros	Size Range

AMG	中文	Português	Español	English
1.1	铁磁性低碳钢	Aço macio magnético	Acero blando	Magnetic soft steel
1.2	结构钢, 表面渗碳钢	Aço estrutural, Aço cementado	Acero de construcción/cementación	Structural steel, case carburizing steel
1.3	普通碳钢	Aço-carbono	Acero al carbono	Plain Carbon steel
1.4	合金钢	Aço de liga	Acero aleado	Alloy steel
1.5	合金钢, 淬火回火钢	Aço de liga, Aço temperado	Acero aleado/temple y revenido	Alloy steel, Hardened and tempered steel
1.6	合金钢, 淬火回火钢	Aço de liga, Aço temperado	Acero aleado/temple y revenido	Alloy steel, Hardened and tempered steel
1.7	热处理合金钢	Aço de liga temperado	Acero aleado cementado	Alloy steel, Heat treated
1.8	淬火合金钢, 耐磨钢	Aço de liga temperado	Acero aleado cementado	Alloy steel, Hardened & Wear resistant steel
2.1	易切削不锈钢	Aço inoxidável de maquinagem fácil	Acero inoxidable fácil mecanizado	Free machining, Stainless Steel
2.2	奥氏体不锈钢	Austenítico	Austenítico	Austenitic
2.3	铁素体 + 奥氏体, 马氏体不锈钢	Ferrítico + Austenítico + Martensítico	Ferritico, Ferr. + Aust., Marten	Ferritic + Austenitic, Ferritic, Martensitic
2.4	沉淀硬化不锈钢	Aço inoxidável de fácil usinagem	Acero Inoxidable Templado	Precipitation Hardened
3.1	灰铸铁	Grafite laminar	Con grafito laminar	Lamellar graphite
3.2	灰铸铁	Grafite laminar	Con grafito laminar	Lamellar graphite
3.3	球墨铸铁, 可锻铸铁	Grafite nodular/ Ferro fundido maleável	Con graf. laminar, fundic. maleable	Nodular graphite, Malleable Cast Iron
3.4	球墨铸铁, 可锻铸铁	Grafite nodular/ Ferro fundido maleável	Con graf. laminar, fundic. maleable	Nodular graphite, Malleable Cast Iron
4.1	纯钛	Titânio, sem liga	Titanio no aleado	Titanium, unalloyed
4.2	钛合金	Titânio, com liga	Titanio aleado	Titanium, alloyed
4.3	钛合金	Titânio, com liga	Titanio aleado	Titanium, alloyed
5.1	纯镍	Níquel, sem liga	Níquel no aleado	Nickel, unalloyed
5.2	镍合金	Níquel, com liga	Níquel aleado	Nickel, alloyed
5.3	镍合金	Níquel, com liga	Níquel aleado	Nickel, alloyed
6.1	紫铜	Cobre	Cobre	Copper
6.2	β黄铜, 青铜	Latão beta, bronze	β-Latón, bronce	β-Brass, Bronze
6.3	α黄铜	Latão alfa	α-Latón	α-Brass
6.4	高强度青铜	Bronze de alta resistência	Metal AMPCO	High Strength Bronze
7.1	纯铝, 纯镁	Al, Mg, sem liga	Al, Mg, no aleado	Al, Mg, unalloyed
7.2	铝合金, 硅含量 < 0.5%	Al com liga, Si<0.5%	Al aleado con Si < 0.5%	Al alloyed, Si < 0.5%
7.3	铝合金, 硅含量 > 0.5% < 10%	Al com liga, Si>0.5%<10%	Al aleado con Si > 0.5% < 10%	Al alloyed, Si > 0.5% < 10%
7.4	铝合金, 硅含量 > 10% 晶须增强铝合金, 镁合金	Al com liga, Si>10% reforçadas com monocristais filiformes, ligas de Al/Mg	Al aleado, Si>10% Reforzado por filamentos, Al-aleados, Mg-aleados	Al alloyed, Si > 10% Whisker reinforced Al-alloys Mg-alloys
8.1	调整字体大小, 适应排版需要	Termoplásticos	Termoplásticos	Thermoplastics
8.2	热固性塑料	Plásticos termoduros	Plásticos endurecidos por calor	Thermosetting plastics
8.3	增强塑料	Materiais plásticos reforçados	Materiales plásticos reforzados	Reinforced plastic materials
9.1	金属陶瓷	Cerametal (metalocerâmica)	Cerametales (metales-cerámicas)	Cermets (metals-ceramics)
10.1	标准石墨	Grafite standard	Grafito standard	Graphite

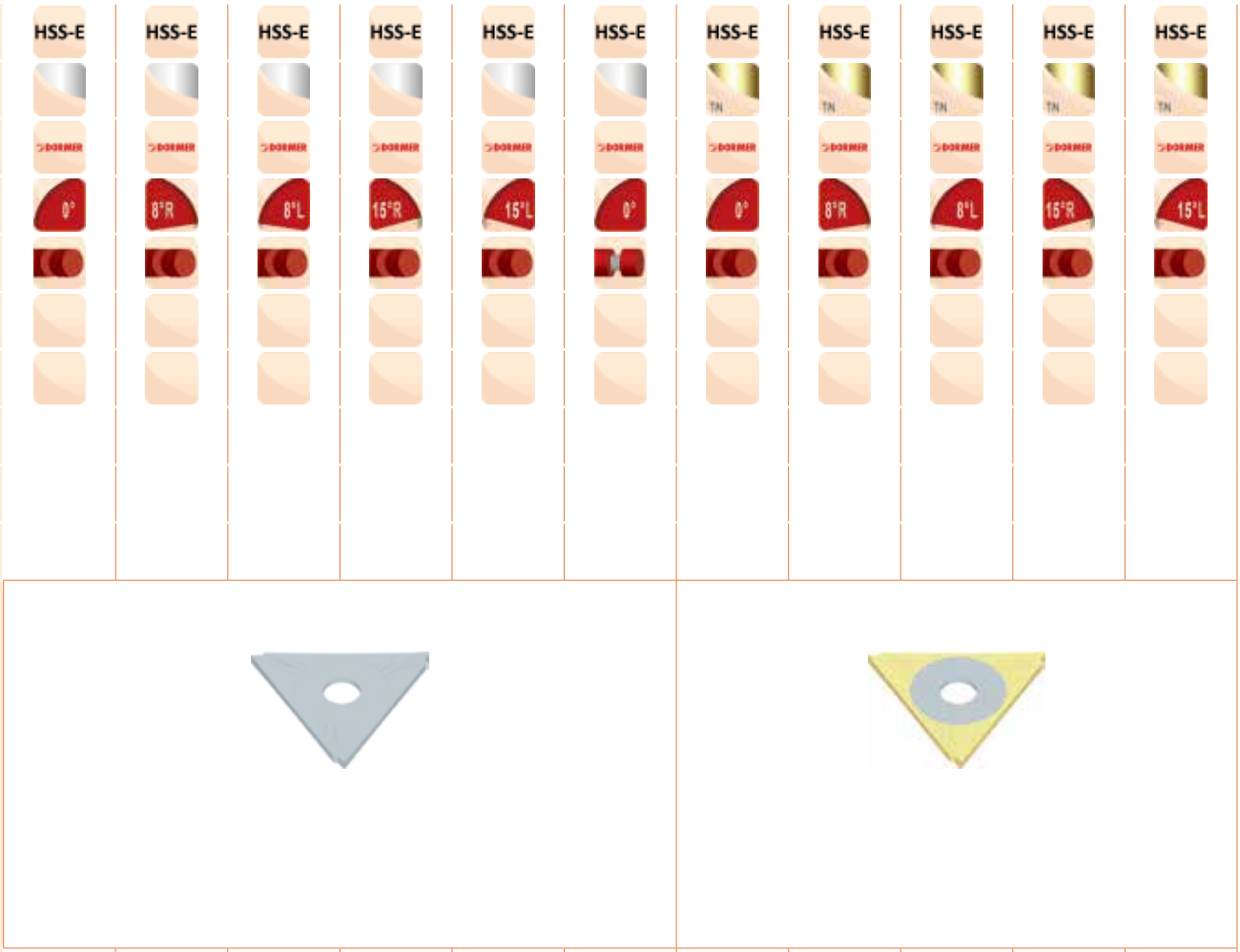

	K300	K301	K302	K303	K304	K305	K310	K311	K312	K313	K314	
	HSS-E	HSS-E	HSS-E	HSS-E	HSS-E	HSS-E	HSS-E	HSS-E	HSS-E	HSS-E	HSS-E	
	1.50 - 2.50	1.50 - 2.50	1.50 - 2.50	1.50 - 2.50	1.50 - 2.50	1.10 - 2.15	23.00 - 40.00	23.00 - 40.00	23.00 - 40.00	23.00 - 40.00	23.00 - 40.00	
AMG	533	533	533	533	533	533	534	534	534	534	534	ISO
1.1	■50A	■50A	■50A	■50A	■50A	■50A	■120A	■120A	■120A	■120A	■120A	P 1
1.2	■40B	■40B	■40B	■40B	■40B	■40B	■100B	■100B	■100B	■100B	■100B	P 1
1.3	●30C	●30C	●30C	●30C	●30C	●30C	■60C	■60C	■60C	■60C	■60C	P 2
1.4	●20D	●20D	●20D	●20D	●20D	●20D	●50D	●50D	●50D	●50D	●50D	P 3
1.5							●20E	●20E	●20E	●20E	●20E	P 4
1.6												H 1
1.7												H 3
1.8												H 4
2.1	●15C	●15C	●15C	●15C	●15C	●15C	■20C	■20C	■20C	■20C	■20C	M 1
2.2							■20C	■20C	■20C	■20C	■20C	M 3
2.3							●10B	●10B	●10B	●10B	●10B	M 2
2.4												S 2
3.1												K 1
3.2												K 2
3.3												K 3
3.4												K 4
4.1												S 1
4.2												S 2
4.3												S 3
5.1												S 1
5.2												S 2
5.3												S 3
6.1	●100B	●100B	●100B	●100B	●100B	●100B	■250B	■250B	■250B	■250B	■250B	N 3
6.2	■65C	■65C	■65C	■65C	■65C	■65C	■160C	■160C	■160C	■160C	■160C	N 4
6.3	■100B	■100B	■100B	■100B	■100B	■100B	■250B	■250B	■250B	■250B	■250B	N 3
6.4												N 4
7.1	●150A	●150A	●150A	●150A	●150A	●150A	■370A	■370A	■370A	■370A	■370A	N 1
7.2	●150B	●150B	●150B	●150B	●150B	●150B	■370B	■370B	■370B	■370B	■370B	N 1
7.3							■110C	■110C	■110C	■110C	■110C	N 1
7.4							●45D	●45D	●45D	●45D	●45D	N 2
8.1												O
8.2												O
8.3												O
9.1												H
10.1												O

	23mm	40mm
A	0.20	0.25
B	0.15	0.20
C	0.10	0.15
D	0.05	0.10
E	0.03	0.05

	23mm	40mm
A	0.20	0.25
B	0.15	0.20
C	0.10	0.15
D	0.05	0.10
E	0.03	0.05

DORMER

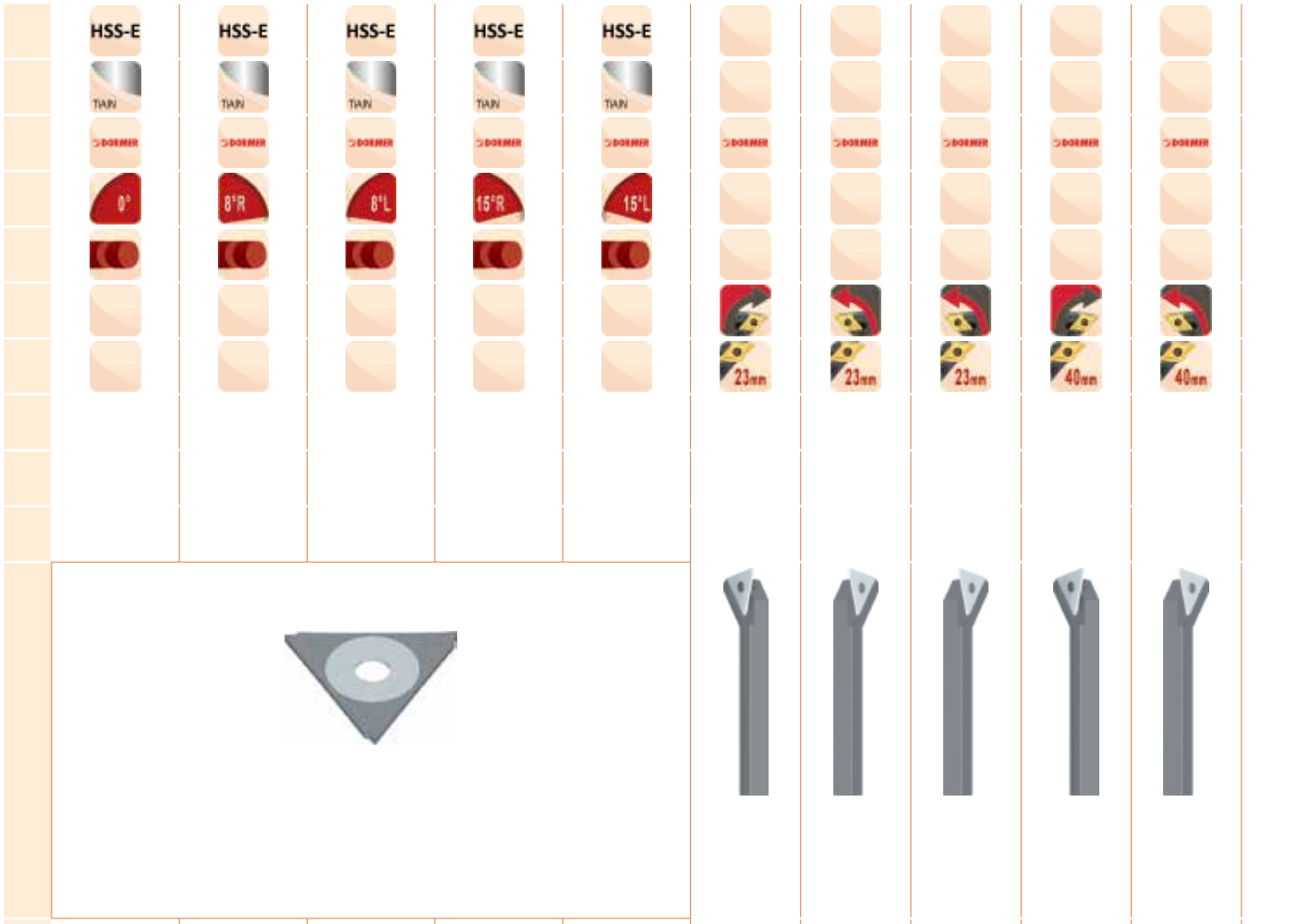

	K330	K331	K332	K333	K334	K100	K101	K102	K103	K104	
	23.00 - 40.00	23.00 - 40.00	23.00 - 40.00	23.00 - 40.00	23.00 - 40.00	10.00 - 20.00	12.00 - 20.00	10.00 - 14.00	16.00 - 32.00	16.00 - 32.00	
AMG	535	535	535	535	535	536	536	536	537	537	ISO
1.1	■120A	■120A	■120A	■120A	■120A						P 1
1.2	■100B	■100B	■100B	■100B	■100B						P 1
1.3	■60C	■60C	■60C	■60C	■60C						P 2
1.4	●50D	●50D	●50D	●50D	●50D						P 3
1.5	●20E	●20E	●20E	●20E	●20E						P 4
1.6											H 1
1.7											H 3
1.8											H 4
2.1	■20C	■20C	■20C	■20C	■20C						M 1
2.2	■20C	■20C	■20C	■20C	■20C						M 3
2.3	●10B	●10B	●10B	●10B	●10B						M 2
2.4											S 2
3.1											K 1
3.2											K 2
3.3											K 3
3.4											K 4
4.1											S 1
4.2											S 2
4.3											S 3
5.1											S 1
5.2											S 2
5.3											S 3
6.1	■250B	■250B	■250B	■250B	■250B						N 3
6.2	■160C	■160C	■160C	■160C	■160C						N 4
6.3	■250B	■250B	■250B	■250B	■250B						N 3
6.4											N 4
7.1	■370A	■370A	■370A	■370A	■370A						N 1
7.2	■370B	■370B	■370B	■370B	■370B						N 1
7.3	■110C	■110C	■110C	■110C	■110C						N 1
7.4	●45D	●45D	●45D	●45D	●45D						N 2
8.1											O
8.2											O
8.3											O
9.1											H
10.1											O

	23mm	40mm
A	0.20	0.25
B	0.15	0.20
C	0.10	0.15
D	0.05	0.10
E	0.03	0.05

						HSS-E	HSS-E	HSS-E	
						DIN 4964B	DIN 4964A	DIN 4964D	
						h13	h9	h13	
									
	K200	K201	K202	K203	K204	K520	K521	K522	
	1.50	1.50	1.50	2.50	2.50	4.00 - 5/8“	3.00 - 20	10.00 - 25	
AMG	538	538	538	538	538	539	540	541	ISO
1.1						■80A	■80A	■80A	P 1
1.2						■80A	■80A	■80A	P 1
1.3						■65A	■65A	■65A	P 2
1.4						■55A	■55A	■55A	P 3
1.5						●35A	●35A	●35A	P 4
1.6									H 1
1.7									H 3
1.8									H 4
2.1						●37A	●37A	●37A	M 1
2.2						●30A	●30A	●30A	M 3
2.3									M 2
2.4									S 2
3.1						■60A	■60A	■60A	K 1
3.2						■50A	■50A	■50A	K 2
3.3						■40A	■40A	■40A	K 3
3.4						■25A	■25A	■25A	K 4
4.1									S 1
4.2									S 2
4.3									S 3
5.1									S 1
5.2									S 2
5.3									S 3
6.1						■100A	■100A	■100A	N 3
6.2						■65A	■65A	■65A	N 4
6.3						■100A	■100A	■100A	N 3
6.4						●50A	●50A	●50A	N 4
7.1						●120A	●120A	●120A	N 1
7.2						●150A	●150A	●150A	N 1
7.3									N 1
7.4									N 2
8.1									O
8.2									O
8.3									O
9.1									H
10.1									O

DORMER






	M150	M151	M152	M200	M200	M200	
	-	-	-	1	2	3	
	542	543	544	545	545	545	ISO
1.1				■			P 1
1.2				■		●	P 1
1.3				■		●	P 2
1.4				■		●	P 3
1.5				■		■	P 4
1.6				■		■	H 1
1.7				●		■	H 3
1.8				●		■	H 4
2.1				■		■	M 1
2.2				■		■	M 3
2.3				■		■	M 2
2.4				●		■	S 2
3.1				■		●	K 1
3.2				■		●	K 2
3.3				■		●	K 3
3.4				■		●	K 4
4.1				■		■	S 1
4.2				■		■	S 2
4.3				■		■	S 3
5.1				■		■	S 1
5.2				■		■	S 2
5.3				■		■	S 3
6.1					●		N 3
6.2					●		N 4
6.3					●		N 3
6.4					●		N 4
7.1					■		N 1
7.2					■		N 1
7.3					■		N 1
7.4					■		N 2
8.1							O
8.2							O
8.3							O
9.1							H
10.1							O

K300
- 切断刀片
- Bedame
- Cuchillas de tronzar
- Parting Off Inserts

K301
- 切断刀片
- Bedame
- Cuchillas de tronzar
- Parting Off Inserts

K302
- 切断刀片
- Bedame
- Cuchillas de tronzar
- Parting Off Inserts

K303
- 切断刀片
- Bedame
- Cuchillas de tronzar
- Parting Off Inserts

K304
- 切断刀片
- Bedame
- Cuchillas de tronzar
- Parting Off Inserts

K305
- 切断刀片
- Bedame
- Cuchillas de tronzar
- Parting Off Inserts

K300; K301; K302; K303; K304; K305

- ▪ 1.1 1.2 6.2 6.3
- • 1.3 1.4 2.1 6.1 7.1 7.2

K300	HSS-E		DORMER	0°			
K301	HSS-E		DORMER	8°R			
K302	HSS-E		DORMER	8°L			
K303	HSS-E		DORMER	15°R			
K304	HSS-E		DORMER	15°L			
K305	HSS-E		DORMER	0°			

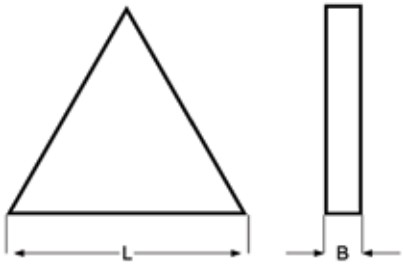

K300	K301	K302	K303	K304	K305
1.50 - 2.50	1.50 - 2.50	1.50 - 2.50	1.50 - 2.50	1.50 - 2.50	1.10 - 2.15

L	B	d min-max mm	K300	K301	K302	K303	K304	K305
23	1.10	9 - 17						K30523.0X1.1
23	1.30	18 - 26						K30523.0X1.3
23	1.50		K30023.0X1.5	K30123.0X1.5	K30223.0X1.5	K30323.0X1.5	K30423.0X1.5	
23	1.60	28 - 35						K30523.0X1.6
40	1.85	36 - 48						K30540.0X1.85
40	2.15	50 - 63						K30540.0X2.15
40	2.50		K30040.0X2.5	K30140.0X2.5	K30240.0X2.5	K30340.0X2.5	K30440.0X2.5	

DORMER

K310
- 切断刀片
- Bedame
- Cuchillas de tronzar
- Parting Off Inserts

K311
- 切断刀片
- Bedame
- Cuchillas de tronzar
- Parting Off Inserts

K312
- 切断刀片
- Bedame
- Cuchillas de tronzar
- Parting Off Inserts

K313
- 切断刀片
- Bedame
- Cuchillas de tronzar
- Parting Off Inserts

K314
- 切断刀片
- Bedame
- Cuchillas de tronzar
- Parting Off Inserts

K310; K311; K312; K313; K314

- ▪ 1.1 1.2 1.3 2.1 2.2 6.1 6.2 6.3 7.1 7.2 7.3
- • 1.4 1.5 2.3 7.4

K310	HSS-E	TiN	DORMER	0°				
K311	HSS-E	TiN	DORMER	8°R				
K312	HSS-E	TiN	DORMER	8°L				
K313	HSS-E	TiN	DORMER	15°R				
K314	HSS-E	TiN	DORMER	15°L				

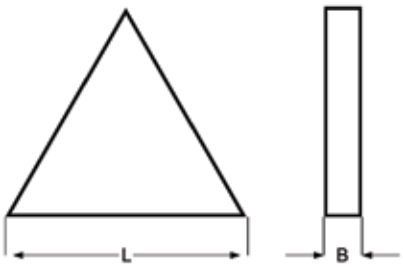

K310	K311	K312	K313	K314
				
23.00 - 40.00	23.00 - 40.00	23.00 - 40.00	23.00 - 40.00	23.00 - 40.00

L	B	K310	K311	K312	K313	K314
23	1.50	K31023.0X1.5	K31123.0X1.5	K31223.0X1.5	K31323.0X1.5	K31423.0X1.5
40	2.50	K31040.0X2.5	K31140.0X2.5	K31240.0X2.5	K31340.0X2.5	K31440.0X2.5

K330
- 切断刀片
- Bedame
- Cuchillas de tronzar
- Parting Off Inserts

K331
- 切断刀片
- Bedame
- Cuchillas de tronzar
- Parting Off Inserts

K332
- 切断刀片
- Bedame
- Cuchillas de tronzar
- Parting Off Inserts

K333
- 切断刀片
- Bedame
- Cuchillas de tronzar
- Parting Off Inserts

K334
- 切断刀片
- Bedame
- Cuchillas de tronzar
- Parting Off Inserts

K330; K331; K332; K333; K334

▪	1.1	1.2	1.3	2.1	2.2	6.1	6.2	6.3	7.1	7.2	7.3
•	1.4	1.5	2.3	7.4							

K330	HSS-E	TiAlN	DORMER	0°			
K331	HSS-E	TiAlN	DORMER	8°R			
K332	HSS-E	TiAlN	DORMER	8°L			
K333	HSS-E	TiAlN	DORMER	15°R			
K334	HSS-E	TiAlN	DORMER	15°L			

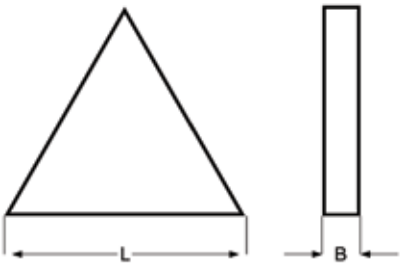

K330	K331	K332	K333	K334
				
23.00 - 40.00	23.00 - 40.00	23.00 - 40.00	23.00 - 40.00	23.00 - 40.00

L	B	K330	K331	K332	K333	K334
23	1.50	K33023.0X1.5	K33123.0X1.5	K33223.0X1.5	K33323.0X1.5	K33423.0X1.5
40	2.50	K33040.0X2.5	K33140.0X2.5	K33240.0X2.5	K33340.0X2.5	K33440.0X2.5

K100
K101
K102

- 切断刀杆
- Porta-Ferramentas para Bedame
- Portacuchillas de tronzar
- Turning Insert Tool Holder

K100

K101

K102

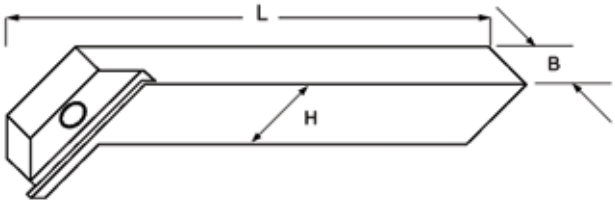

K100	K101	K102
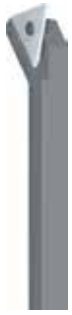		
10.00 - 20.00	12.00 - 20.00	10.00 - 14.00

H	B	L	K100	K101	K102
10	10	125	K10010.0		K10210.0
12	12	125	K10012.0	K10112.0	
14	12	125			K10214.0
16	12	125	K10016.0	K10116.0	
20	12	125	K10020.0	K10120.0	

K103
K104

- 切断刀杆
- Porta-Ferramentas para Bedame
- Portacuchillas de tronzar
- Turning Insert Tool Holder

K103

K104

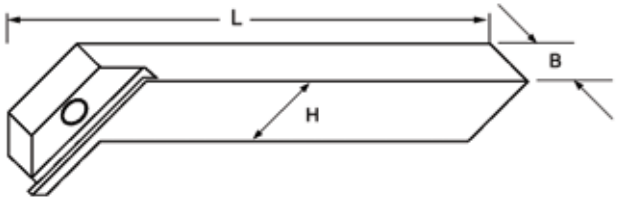

K103	K104
	
16.00 - 32.00	16.00 - 32.00

H	B	L	K103	K104
16	16	140	K10316.0	K10416.0
25	16	140	K10325.0	K10425.0
32	16	140	K10332.0	K10432.0

K200
K201
K202
K203
K204

- 车削刀杆备件
- Componentes para porta-ferramentas
- Recambios para porta-cuchillas de tronzar
- Spare Parts for Indexable Tool Holders

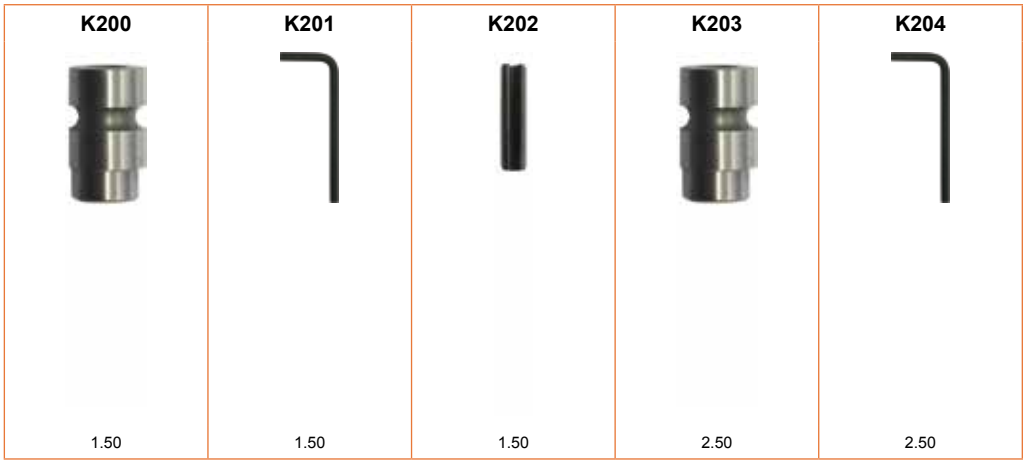

size	tool code	K200	K201	K202	K203	K204
1.5	Excentric	K200ECC1.5				
1.5	Spanner		K201SPAN1.5			
1.5-2.5	Pin			K2022.5X12.0		
2.5	Excentric				K203ECC2.5	
2.5	Spanner					K204SPAN2.5

K520

- 方形的白钢条h13
- Bits Quadrado h13
- Cuchilla Cuadrada h13
- Toolbits Square h13

K520												
	■	1.1	1.2	1.3	1.4	3.1	3.2	3.3	3.4	6.1	6.2	6.3
	•	1.5	2.1	2.2	6.4	7.1	7.2					

K520 HSS-E DIN 4964B h13

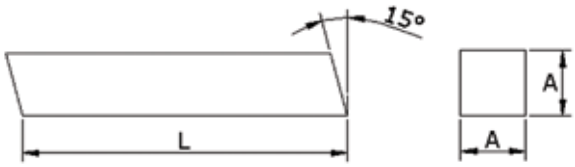

K520

4.00 - 5/8“

A	L	K520
4	100	K5204.0X100.0
5	160	K5205.0X160.0
6	100	K5206.0X100.0
6	160	K5206.0X160.0
6	200	K5206.0X200.0
8	100	K5208.0X100.0
8	160	K5208.0X160.0
8	200	K5208.0X200.0
10	100	K52010.0X100.0
10	160	K52010.0X160.0
10	200	K52010.0X200.0
12	100	K52012.0X100.0
12	160	K52012.0X160.0
12	200	K52012.0X200.0
14	160	K52014.0X160.0
14	200	K52014.0X200.0
16	100	K52016.0X100.0
16	160	K52016.0X160.0
16	200	K52016.0X200.0
20	160	K52020.0X160.0
20	200	K52020.0X200.0
25	200	K52025.0X200.0
3/16	2.1/2	K5203/16X2.1/2
1/4	2.1/2	K5201/4X2.1/2
1/4	4“	K5201/4X4
5/16	2.1/2	K5205/16X2.1/2
5/16	3“	K5205/16X3
5/16	4“	K5205/16X4
3/8	3“	K5203/8X3
3/8	4“	K5203/8X4
3/8	6“	K5203/8X6
7/16	3.1/2	K5207/16X3.1/2
1/2	4“	K5201/2X4
1/2	6“	K5201/2X6
5/8	4.1/2	K5205/8X4.1/2
5/8	6“	K5205/8X6

K521

- 圆形的白钢条h9
- Bits Redondo h9
- Cuchilla Redonda h9
- Toolbits Round h9

K521												
	▪	1.1	1.2	1.3	1.4	3.1	3.2	3.3	3.4	6.1	6.2	6.3
	•	1.5	2.1	2.2	6.4	7.1	7.2					

K521 HSS-E DIN 4964A h9

A	L	K521
3	100	K5213.0X100.0
4	100	K5214.0X100.0
5	160	K5215.0X160.0
6	100	K5216.0X100.0
6	160	K5216.0X160.0
8	100	K5218.0X100.0
8	160	K5218.0X160.0
8	200	K5218.0X200.0
10	100	K52110.0X100.0
10	200	K52110.0X200.0
12	100	K52112.0X100.0
12	200	K52112.0X200.0
14	200	K52114.0X200.0
16	200	K52116.0X200.0
20	200	K52120.0X200.0

K522

- 矩形的白钢条h13
- Bits Retângular h13
- Cuchilla Rectangular h13
- Toolbits Rectangle h13

K522												
	■	1.1	1.2	1.3	1.4	3.1	3.2	3.3	3.4	6.1	6.2	6.3
	•	1.5	2.1	2.2	6.4	7.1	7.2					

K522 HSS-E DIN 4964D h13

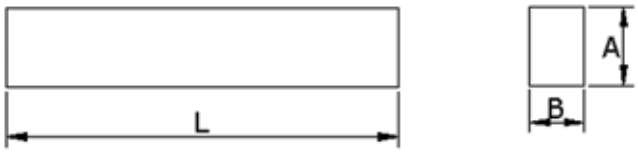

A	B	L	K522
10	3	200	K52210.0X3.0X200.0
12	3	200	K52212.0X3.0X200.0
10	4	200	K52210.0X4.0X200.0
16	4	200	K52216.0X4.0X200.0
20	4	200	K52220.0X4.0X200.0
18	5	200	K52218.0X5.0X200.0
20	5	200	K52220.0X5.0X200.0
10	6	200	K52210.0X6.0X200.0
12	6	200	K52212.0X6.0X200.0
16	6	200	K52216.0X6.0X200.0
20	6	200	K52220.0X6.0X200.0
25	6	200	K52225.0X6.0X200.0
12	8	200	K52212.0X8.0X200.0
16	8	200	K52216.0X8.0X200.0
20	8	200	K52220.0X8.0X200.0
12	10	200	K52212.0X10.0X200.0
16	10	200	K52216.0X10.0X200.0
20	10	200	K52220.0X10.0X200.0
25	12	200	K52225.0X12.0X200.0
25	16	200	K52225.0X16.0X200.0

M150

- 莫氏锥套,表面油液回火韧性处理
- Bucha Cônica Temperada
- Conos Morse endurecidos en aceite
- Sleeves Oil Toughened

K=外部, K1=内部
K=Ext. K1=Int.
k=Ext. K1=Int.
K=Ext. K1=Int.

M150

-

Nr.	K = Nr.	K1 = Nr.	M150
10	1	0	M1501-0
21	2	1	M1502-1
31	3	1	M1503-1
41	4	1	M1504-1
32	3	2	M1503-2
42	4	2	M1504-2
52	5	2	M1505-2
43	4	3	M1504-3
53	5	3	M1505-3
54	5	4	M1505-4
65	6	5	M1506-5

M151

- 莫氏锥套,表面淬硬和磨削处理
- Bucha Cônica Temperada e Retificada
- Conos Morse endurecidos y cementados
- Sleeves Hardened and Ground

K=外部, K1=内部
K=Ext. K1=Int.
k=Ext. K1=Int.
K=Ext. K1=Int.

M151

-

Nr.	K = Nr.	K1 = Nr.	M151
10	1	0	M1511-0
21	2	1	M1512-1
31	3	1	M1513-1
41	4	1	M1514-1
32	3	2	M1513-2
42	4	2	M1514-2
52	5	2	M1515-2
43	4	3	M1514-3
53	5	3	M1515-3
54	5	4	M1515-4
65	6	5	M1516-5

M152

- 钻头提取销板
- Extrator de Brocas
- Expulsores de Brocas
- Drill Drift

M152

-

Nr.	M152
0	M1520
1 + 2	M15212
3 + 4	M15234
4 + 5	M15245
6	M1526

M200

- 切削油
- Óleo de Corte
- Aceite de Corte
- Cutting Oil

M200

A		M200
1/4 Ltr. 12x	1BLUE	M2000.25NR.1BLUE
1/4 Ltr. 12x	2RED	M2000.25NR.2RED
1/4 Ltr. 12x	3GREEN	M2000.25NR.3GREEN
1 Ltr.	1BLUE	M2001.0NR.1BLUE
1 Ltr.	2RED	M2001.0NR.2RED
1 Ltr.	3GREEN	M2001.0NR.3GREEN
5 Ltr.	1BLUE	M2005.0NR.1BLUE
5 Ltr.	2RED	M2005.0NR.2RED
5 Ltr.	3GREEN	M2005.0NR.3GREEN
20 Ltr.	1BLUE	M20020.0NR.1BLUE

Gyakori ikonok / Icoane comune
Ortak İkonlar / Common Icons

Anyag / Material / Malzeme / Material

HM

Keményfém
Carbura
Karbür
Carbide

HSS

Gyorsacél
Otel rapid
Yüksek Hız Çeliği
High Speed Steel

HSS-E

Kobalttal ötvözött gyorsacél
Otel rapid cu Co
Yüksek Hız Çeliği Kobaltlı
High Speed Cobalt

HSS-E PM

Kobalttal ötvözött porkohászati gyorsacél
Otel rapid cu Co sinterizat
HSS-E Toz Metalurjisi Çelik
HSS-E Powder Metallurgy Steel

HSS HM

Gyorsacél / keményfém
Otel rapid/ Carbura
Yüksek Hız Çeliği/ Karbür
High Speed Steel/ Carbide

Bevonat / Acoperire / Kaplama / Coating

AlCrN

Alumínium-króm nitrid
Nitrura Aluminiu-Crom
Alüminyum Krom Nitrit
Aluminium Chromium Nitride

Hi

Polírozott felület
Finisare lustruita
Parlak Yüzey
Polished Finish

TiSiN

Titán-szilícium nitrid
Nitrura Titan-Siliciu
Titanyum Silikon Nitrid
Titanium Silicon Nitride

ST

Megeresztés gőzatmoszférában
Brunare
Buharlar Tavlanmış
Steam Tempered

Fényes
Lucios
Parlak
Bright

Bronze

Bronz
Bronz
Bronz
Bronze

Diamond

Gyémánt
Diamant
Elmas
Diamond

Cr

Fényes króm
Crom lucios
Krom
Chromium

Super B

Super B

TiAlN

Titán-alumínium nitrid
Nitrura titan-aluminiu
Titanyum Alüminyum Nitrid
Titanium Aluminium Nitride

TiCN

Titán-karbonitrid
Carbonitrura de titan
Titanyum Karbo-Nitrid
Titanium Carbo-Nitride

TiN

Titán nitrid
Nitrura de titan
Titanyum Nitrid
Titanium Nitride

ST

Fényes/gőzmegeresztéses
Lucios/brunat
Parlak/ Buharla Tavlanmış
Bright/ Steam Tempered

TiN

Fényes/titán nitrid
Lucios/nitrura de titan
Parlak/ Titanyum Nitrid
Bright/ Titanium Nitride

ST Bronze

Megeresztés gőzatmoszférában / bronz
Brunare / Bronz
Buharla Tavlanmış/ Bronz
Steam Tempered/ Bronze

TiAlN Top

Titán alumínium nitrid - Top
Nitrura titan-aluminiu - Top
Titanyum Alüminyum Nitrid - Üst
Titanium Aluminium Nitride - Top

X-CEED

Xceed

Ti-phon

Ti-phon for Hydra

AlTiCN

Alumínium-titán karbonitrid
Carbonitrura Aluminiu-Titan
Alüminyum Titanyum Karbo - Nitrid
Aluminium Titanium Carbo-Nitride

AlTiN

Alumínium-titán nitrid
Nitrura Aluminiu-Titan
Alüminyum Titanyum Nitrid
Aluminium Titanium Nitride

Alcrona

Alcrona

Alcrona Top

Alcrona Top

Alcrona Pro

Alcrona Pro

Ikon megnevezések / Descriere icoana
İkon açıklamaları / Icon descriptions

Gyakori ikonok / Icoane comune
Ortak İkonlar / Common Icons

Irány
Direcție
Yön
Direction

Jobb
Dreapta
sağ
Right

Bal
Stanga
sol
left

Választás
Caracterizare
Rating
Rating

■

Kiváló
Excelent
En Uygun
Excellent

●

Jó
Bun
Uygun
Good

Fúrási mélység
Adancimea
Depth
Depth

Fúró ikonok / Icoane gaurire
Matkap İkonları / Drilling Icons

Csúcsszög
Unghiul la varf
Uç Açısı
Point Angle

Kúpsüllyesztők
Unghi tesire
Soğutma
Countersink [0]

Központi 60º
Centruitor 60º
Punta 60[0]
Centre 60[0]

Központi sugár alak
Centruitor cu raza
Punta - Radyus Form
Centre radius form

Lépcső 90°
Tesire la 90º
Kademeli kılavuz - 90°
Subland 90[0]

Letörés 180°
Centruitor 60º
Kademeli kılavuz - 90°
Subland 180[0]

Lépcsős fúró 90º
Burghiu in trepte 90º
Kademeli Matkap 90[0]
Step Drill 90[0]

Lépcsős fúró 180º
Burghiu in trepte 180º
Kademeli Matkap 180[0]
Step Drill 180[0]

Alak
Forme
Form
Form

N

H

W

CTW

CTW geomatria
Miez subtiat continuu
Continuously Thinned Web
Continuously Thinned Web

Hűtés
Racire
hladilno-mazalno
Soğutma
Coolant

Belső hűtés
Racire interna
İç soğutma
Internal Coolant

Fúró ikonok / Icoane gaurire
Matkap İkonları / Drilling Icons

Szár
Coada
Şaft
Shank

Hengeres szár
Coada cilindrica
düz şaft
Straight Shank

Morsekúpos szár
Coada Morse
Mors Konik şaft
Morse taper shank

DIN 6535 HA

DIN 6535 HE

Hengeres, lapolt végű
Coada cu antrenor
Dilli şaft
Shank with tang

Hengeres, négyszög végű
Coada cu patrat de antrenare
Kare dilli şaft
Shank with square

Csökkentett szár
Coada detalonata
inceltilmiş şaft
Reduced shank

DIN 6535 HB / HE

Szabvány
Standard
Standart
Standard

Ikon megnevezések / Descriere icoana
İkon açıklamaları / Icon descriptions
Dörzsár - Kúpsüllyesztő ikonok / Reaming - countersink Icons
Raybalama - havşa ikonları / Reaming - countersink Icons

Kúposság
meredeksége
Gradientul
conului
Konik oranı
Taper Gradient

Tűrés
Toleranta
Tolerans
Tolerance

Alkalmazás
Aplicatie
Uygulama
Application

Kúpos süllyesztés
Zencuire
Havşa Matkabı
Countersink

Hengeres süllyesztés
Lamare
Silindirik havşa matkab
Counterbore

G314

M138

Kúpsüllyesztő
szöge
Unghi zencuire
Soğutma
Countersink [0]

G314

M138

Szár
Coada
Şaft
Shank

Hengeres szár
Coada cilindrica
düz
Straight

Morsekúpos szár
Coada Morse
Mors Konik
Morse taper

Szabvány
Standard
Standart
Standard

Menetmegmunkálás /Icoane filetare
Diş açma ikonları / Threading icons

Menet típusok
Forma filetului
Diş formu
Thread form

M	MF	UNC	UNF
Normál menet Metric Metrik Metric coarse	Finommenet Metric fin İnce diş metrik Metric fine	Amerikai normál menet Unified Coarse	Amerikai finom menet Unified Fine
UN	G	NPT	NPTF
Amerikai menet Unified	Withworth csőmenet British standard pipe fastening - G series	Amerikai kúpos csőmenet National taper pipe	Amerikai kúpos csőmenet (száraztömítésű) National taper pipe dryseal
NPSF	NPSM	BA	BSF
Amerikai hengeres csőmenet (száraztömítésű) National taper pipe dryseal	Amerikai hengeres csőmenet National straight pipe mechanical	Angol zsinórmenet British association	Angol Withworth finommenet British standard fine
BSW	EGM	PG	Rc
Angol Standard Witworth menet British standard Whitworth	Páncélmenet	Armour pipe/ steel conduit	British standard pipe taper - Rc Series

Horonygeometria

Helis Geometrisi
Flute Geometry

Egyenes horony Canale drepte Düz Helis Straight Flute	Terelőél Varf spiral Spiral Uçlu Spiral Point	Menetformázó - horony nélküli deformare Ovalama Kılavuzu Fluteless - thread forming	Menetformázó kenőhoronnyal deformare cu canale de ulei Ovalama Kılavuzu, Yağ kanallı Fluteless - thread forming - oil grooves
λ10°	λ15°	λ27°	λ30°
10º-os csavart horony Canal elicoidal 10º Helis Açılı 10º Spiral flute 10º	15º	27º	30º
λ35°	λ40°	λ45°	λ48°
35º	40º	45º	48º

Furat típus
Tip gaura
Delik Tipi
Hole Type

Átmenő furat Gaura strapunsa Through hole Through hole	Zsákfurat Gaura infundata Blind hole Blind hole	Átmenő vagy zsákfurat Gaura strapunsa sau infundata Through or blind hole Through or blind hole

Ikon megnevezések / Descriere icoana
İkon açıklamaları / Icon descriptions

Menetmegmunkálás /Icoane filetare
Diş açma ikonları / Threading icons

Bekezdőkúp
Conul de atac
Pah
Chamfer

B típusú
Con B
Pah B
Chamfer B

Tűrés
Toleranta
Tolerans
Tolerance

Közepes
Mediu
Orta
Medium

Normál
Normal
Normal
Normal

Szár
Coada
Şaft
Shank

Szabvány
Standard
Standart
Standard

Marás ikonjai / Icoane frezare / Frezeleme ikonları / Milling icons

Típus
Tip gaura
Tip
Type

Középsimító forgácstörővel
Sfaramator de aschii semifinisare
Yarı-finiş talaş kırıcı
Semi-finishing chipbreaker

Finom menetemelkedésű, aszimmetrikus kerek forgácstörővel
Sfaramator de aschii rotund asimetric pas fin
Asimetrik formlu finiş talaş kırıcı
Fine pitch asymmetrical rounded profile chipbreaker

Maró típusok könnyen és nehezen megmunkálható acélokhoz
Tip tais pentru otel cu rezistenta joasa-inalta
Düşük ve yüksek dayanımlı çelikler için
For steels with low to high resistance

Durva fogazású, sima profilú forgácstörő
Sfaramator de aschii plat pas mare
Düz profilli talaş kırıcı
Coarse pitch flat profile chipbreaker

Durva fogazású, aszimmetrikus hengeres forgácstörő
Sfaramator de aschii rotunjit asimetric pas mare
Asimetrik formlu talaş kırıcı
Coarse pitch asymmetrical rounded profile chipbreaker

Marók puha és alakítható anyagokhoz
Tais pentru materiale moi si maleabile
Yumuşak ve yapışkan malzemeler için
For soft and malleable materials

Középsimító forgácstörővel
Sfaramator de aschii semifinisare
Yuvarlak formlu talaş kırıcı
Coarse pitch rounded profile chipbreaker

Alkalmazás
Aplicatie
Uygulama
Application

Horonymarás P9
Canelare P9
Kanal P9
Slotting P9

Horonymarás
Canelare
Kanal
Slotting

Szuper-simítás
Super-finisare
Süper-finiş
Super-finishing

Simítás
Finisare
Finiş
Finishing

Nagyolás
Degrosare
Kaba
Roughing

Másoló marás
Cap sferic
Küresel
Ball nose

Vállmarás rádiusszal
cu raza
Köşe radyuslu
Corner radius

Nagy előtolás
Avans rapid
Yüksek ilerleme
High feed

Letörő maró
Sanfrenare
Pah
Chamfering

T-horony marás
Canale T
T freze
T-shaped

Reteszhorony marás
Canal de pana
T freze
Woodruff

Fecskefarkú
Coada de randunica
Kırlangıç
Dovetail

Fordított fecskefarkú
Conica
Ters kırlangıç
Inverse dovetail

Sarok lekerekítése
Rotunjiri colturi
Radüs
Corner rounding

Horonymarás
Disc alternant/ferastrau
Kenar ve yüzey
Side and face saws

Multi

Homlokmarás
Cilindrica cu alezaj
Göbekten bağlamalı
Shell end

Nagyolás
Degrosare
Kaba
Roughing

Ikon megnevezések / Descriere icoana
İkon açıklamaları / Icon descriptions

Marás ikonjai / Icoane frezare / Frezeleme ikonları / Milling icons

Irányok
Directia
Yön
Direction

Váll-,homlokmarás, axiális marás
Canelare, frezare in plan inclinat descendent, plonjare
Kanal açma, rampalama, dalma
Slotting, ramping, diving

Vállmarás, axiális marás
Canelare, frezare in plan inclinat descendent
Kanal açma, rampalama
Slotting, ramping

Simítás
Finisare
Finiş
Finishing

Marás
Frezare
frezesi
Milling

Dolgozó hossz
Lungime tais
Kesme Boyu
Cut Length

Extra rövid
Extrascurt
Ekstra kısa
Extra short

Közepes
Mediu
Orta
Medium

Extra hosszú
Extralung
Ekstra uzun
Extra long

Szártűrés
Toleranta cozii
çap toleransı
Diameter tolerance

d11 | e8 | h9 | h10 | h11 | h12 | k10 | k12 | js14 | js16

e8 egész és feles méreteknél, h10 a többinél
e8 pentru diametre intregi si jumatati, h10 pentru celelalte valori
Tam ve yarım çaplar e8, diğerleri h10
e8 full and half diameters, h10 others

Spirálszög/
Homlokszög
Unghiul spirei/
Unghi de degajare
Helis açısı /
Boşluk açısı
Helix Angle/
Rake Angle

γ 5°	γ15°	γ18°	λ0° γ0°	λ≠ γ10°	λ10° γ10°	λ12° γ10°	λ15° γ10°	λ15° γ15°	λ25° γ0°	λ25° γ20°
λ30° γ-10°	λ30° γ3°	λ30° γ9°	λ30° γ10°	λ30° γ12°	λ30° γ15°	λ30° γ20°	λ35° γ9°	λ35° γ12°	λ40° γ-6°	λ40° γ3°
λ40° γ4°	λ40° γ10°	λ40° γ15°	λ40° γ20°	λ40° γ25°	λ45° γ-10°	λ45° γ12°	λ50° γ-26°	λ50° γ3°		

Fogszám
Nr. Dinti
ağız (z)
Teeth (z)

z 1	z 2	z 3	z 3-4	z 3-5	z 3-6	z 4	z 4-6	z 4-8	z 6-8	z 6-10
z 6-12	z 8-12	z 10-12	z 16-30	z 28-44	z 28-100	z 40-200	z 80-180	z 100-140	z 128-220	z 160-350

4 Élek száma - egyenlőtlen horonyszélesség
4 Nr.dinti Divizare inegala
4 ağzılı - farklı helisli
4 teeth - differential pitch

Marás ikonjai / Icoane frezare
Frezeleme ikonları / Milling icons

Szár
Coada
Şaft
Shank

Szabvány
Standard
Standart
Standard

Ikon megnevezések / Descriere icoana
İkon açıklamaları / Icon descriptions

Turbómaró ikonjai / Icoane Freza biax
Çapak alma ikonları / Burr icons

Alkalmazás
Aplicatie
Uygulama
Application


A

Homlokél nélküli kivitel
cilindru fără tais final
silindirik
Cylinder without end cut


B

Hengeres kialakítás homlokéllel
cilindru cu tais final
silindirik düz kesimli
Cylinder with endcut


C

Gömbvégű, hengeres
cilindru cu cap sferic
küre
Ball nosed cylinder


D

Gömb
cap sferic
top
Ball


E

Ovális
cap oval
oval
Oval


F

Ívelt gömbvégű
cap sferic forma copac
Küre yaprak
Ball nosed tree


G

Ívelt, hegyes
cap ascutit forma copac
Düz yaprak
Pointed tree


H

Láng forma
forma flacara
Parlak
Flame


J

60°-os süllyesztőmaró
zencuire 60°
60° Havşa
60º degree countersink


K

90°-os süllyesztőmaró
zencuire 90°
90° Havşa
90º degree countersink


L

Gömbvégű kúp
con cu raza varf
Konik küre
Ball nosed cone


M

Kúp
conica
Konik küre
Cone


N

Fordított kúp
con inversat
ters konik
Inverted cone

Sectionare fibra de sticla
Fiberglass kesme
Fibreglass routing

Típus
Tip gaura
TIP
Type

ST

Magas forgácsolási teljesítmény acélban
Rata ridicata de îndepartare a spanului în otel
Çelikte yüksek talaş kaldırma oranı

High metal removal rate in steel

VA

Magas forgácsolási teljesítmény saválló acélban
Rata ridicata de îndepartare a spanului în otel inoxidabil
Paslanmaz çelikte yüksek talaş kaldırma oranı
High metal removal rate in stainless steel

AL

Alumínium, nemvas fémek és műanyag megmunkálás
Aschiere aluminiu pentru materiale neferoase si plastic
Plastik dahil demir dışı malzemeler için Alüminyum tip
Aluminium cut for non-ferrous material including plastics

GRP

Üvegszálas anyagok, kompozitok

Fibra de sticla si compozite

Fiberglas ve kompozitler

Fibreglass and composites

DC

Kettős él, univerzális felhasználáshoz
Taiere dubla pentru uz general
Genel kullanım için çift kesim tip
Double cut for general purpose use

??
tais final
End cut
End cut

Alap kialakítás
Standard
Standart
Standard

Varf burghiu
Matkap ucu
Drill point

Freze
Parmak freze
End mill

Leszúró szerszámok ikonjai / Icoane scule debitare
Kesme ikonları / Parting off icons

Élszög ° tais retezare Kenar açısı Edge angle	 0°	 8° balos / jobbos 8° stanga / dreapta 8° sol - sağ 8° left - right	 15° balos / jobbos 15° stanga / dreapta 15° sol - sağ 15° left - right
Lapkaméret Dimensiunea placutei Kesici kenar uzunluğu Insert size			
Vágásirány Directia de taiere Kesme yönü Direction of cut	 Jobbos Dreapta sağ Right	 Balos Stanga sol Left	
Alkalmazás Aplicatie Uygulama Application	 Leszúrás Debitare Cut Cut	 Beszúrás Canelare Groove Groove	
Alak Forma Form Form	 Hengeres Rotunda Çubuk Round	 Négyszög Patrata Kare Square	 Téglalap Dreptunghiulara Dikdörtgen Rectangular
Tűrés Toleranta Tolerans Tolerance			
Szabvány Standard Standart Standard	   		

中文			硬度	抗拉强度	
适用材料分组			HB	N/mm²	ISO
1. 钢	1.1	铁磁性低碳钢	< 120	< 400	P 1
	1.2	结构钢, 表面渗碳钢	< 200	< 700	P 1
	1.3	普通碳钢	< 250	< 850	P 2
	1.4	合金钢	< 250	< 850	P 3
	1.5	合金钢, 淬火回火钢	> 250 < 350	> 850 < 1200	P 4
	1.6	合金钢, 淬火回火钢	> 350	> 1200 < 1620	H 1
	1.7	热处理合金钢	49-55HRC	> 1620	H 3
	1.8	淬火合金钢, 耐磨钢	55-63HRC	> 1980	H 4
2. 不锈钢	2.1	易切削不锈钢	< 250	< 850	M 1
	2.2.	奥氏体不锈钢	< 320	< 1100	M 3
	2.3	铁素体 + 奥氏体, 马氏体不锈钢	< 300	< 1000	M 2
	2.4	沉淀硬化不锈钢	>320 <410	>1100 <1400	S 2
3. 铸铁	3.1	灰铸铁	< 150	> 500	K 1
	3.2	灰铸铁	> 150 <300	> 500 < 1000	K 2
	3.3	球墨铸铁, 可锻铸铁	< 200	< 700	K 3
	3.4	球墨铸铁, 可锻铸铁	> 200 < 300	> 700 < 1000	K 4
4. 钛	4.1	纯钛	< 200	< 700	S 1
	4.2	钛合金	< 270	< 900	S 2
	4.3	钛合金	> 270 < 350	> 900 ≤ 1250	S 3
5. 镍	5.1	纯镍	< 150	< 500	S 1
	5.2	镍合金	< 270	> 900	S 2
	5.3	镍合金	> 270 < 350	> 900 < 1200	S 3
6. 铜	6.1	紫铜	< 100	< 350	N 3
	6.2	β黄铜, 青铜	< 200	< 700	N 4
	6.3	α黄铜	< 200	< 700	N 3
	6.4	高强度青铜	< 470	< 1500	N 4
7. 铝 镁	7.1	纯铝, 纯镁	< 100	< 350	N 1
	7.2	铝合金, 硅含量 < 0.5%	< 150	< 500	N 1
	7.3	铝合金, 硅含量 > 0.5% < 10%	< 120	< 400	N 1
	7.4	铝合金, 硅含量 > 10% 晶须增强铝合金, 镁合金	< 120	< 400	N 2
8. 合成材料	8.1	热塑性塑料	---	---	O
	8.2	热固性塑料	---	---	O
	8.3	增强塑料	---	---	O
9. 硬质材料	9,1	金属陶瓷	< 550	< 1700	H
10. 石墨	10.1	标准石墨	---	< 100	O

DORMER

以不同标准表示的工件材料实例

AMG	EN	W Nr.	DIN	BS	SS	USA	UNS	ISO
1.1		1.1015, 1.1013	Rfe60, Rfe100	230Mo7, 050A12	1160	Leaded Steels	G12120	P 1
1.2	EN 10 025 – S235JRG2	1.1012, 1.1053, 1.7131	St37-2, 16MnCr5, St50-2	060A35, 080M40, 4360-50B	1312, 1412, 1914	135, 30	G10100	P 1
1.3	EN 10 025 – E295	1.1191, 1.0601	CK45, C60	080M46, 080A62	1550, 2142, 2172	1024, 1060, 1061	G10600	P 2
1.4	EN 10 083-1 – 42 CrMo 4 - EN 10 270-2	1.7225, 1.3505, 1.6582, 1.3247	42CrMo4, 100Cr6, 34CrNiMo6, S2-10-1-8	708M40/42, 817M40, 534A99, BM2, BT42	1672-04, 2090, 2244-02, 2541-02	4140, A2, 4340, M42, M2	G41270, G41470, T30102, T11342	P 3
1.5	EN ISO 4957 – HS6-5-2 - EN-ISO 4957 – HS6-5-2-5	1.2510, 1.2713, 1.3247, 1.2080	100MnCrW12, 55NiCrMoV6, X210Cr12, S2-10-1-8	B01, BM2, BT42, 826 M40, 830M31	2244-04, 2541-03, 2550, 2722, 2723	01, L6, M42, D3, A2, M2, 4140, 8630	G86300, T30102' T11302, T30403, T11342	P 4
1.6	EN-ISO 4957 – HS2-9-1-8	1.2510, 1.2713, 1.3247, 1.2080	100MnCrW12, X210Cr12, S2-10-1-8	801, 826 M40, 830M31	2244-05, 2541-05, , HARDOX 400	01, L6, M42, D3, 4140, 8130	T30403, G41400, J14047	H 1
1.7	EN-ISO 4957 – HS2-9-1-8	1.2510	100MnCrW4	BO1, BD3, BH13	HARDOX 500			H 3
1.8	EN-ISO 4957 – X40CrMoV5-1	1.3343, 1.2344	S6-5-2, GX40CrMoV5-1	BM2, BH13	2242 HARDOX 600			H 4
2.1	EN 10 088-3 – X14CrMoS17	1.4305, 1.4104	X10CrNiS189, X12CrMoS17	303 S21 , 416 S37	2301, 2312, 2314, 2346, 2380	303, 416, 430F	S30300, S41600, S43020	M 1
2.2.	EN 10 088-2,0 -3 – 1.4301+AT	1.4301, 1.4541, 1.4571	X5CrNi189 X10CrNiMoTi1810	304 S15, 321 S17, 316 S, 320 S12	2310, 2333, 2337, 2343, 2353, 2377	304, 321, 316	S30400, S32100, S31600	M 3
2.3	EN 10 088-3 – 1.4460	1.4460, 1.4512, 1.4582	XBCrNiMo275, X4CrNiMoN6257	317 S16, 316 S16	2324, 2387, 2570	409, 430, 436	S40900, S4300, S43600	M 2
2.4	EN 1.4547	1.4547	X2CrNiMo20-18-6	HR41	2378	17-4PH	S31254	S 2
3.1	EN 1561 – EN-JL1030	0.6010, 0.6040	GG10, GG40	Grade150, Grade 400	0120, 0212, 0814	ASTM A48 class 20	F11401, F12801	K 1
3.2	EN 1561 – EN-JL1050	0.6025, 0.6040	GG25, GG40	Grade200, Grade 400	0125, 0130, 0140, 0217	ASTM A48 class 40, STM A48 class 60	F12801, F14101	K 2
3.3	EN 1561 – EN-JL2040	0.7040, 0.7070, 0.8145, 0.8045	GGG40, GGG70, GTS45-06, GTW45-07	420/12, P440/7, 700/2, 30g/72	0219, 0717, 0727, 0732, 0852	ASTM A220 grade 40010, ASTM A602 grade M4504	F22830, F20001	K 3
3.4	EN 1561 – EN-JL2050	0.7040, 0.7070, 0.8145, 0.8045	GGG40, GGG70, GTS45-06, GTW45-07	420/12, P440/7, 700/2, 30g/72	0221, 0223, 0737, 0854	ASTM A220 grade 90001, ASTM A602 grade M8501	F26230, 20005	K 4
4.1		3.7024LN	Ti99,8	TA1 to 9	Ti99,8	ASTM B265 grade 1	R50250	S 1
4.2		3.7164LN, 3.7119LN	TiAl6V4, TiAl55n2	TA10 to 14, TA17	TiAl6V4, TiAl5Sn2	AMS4928	R54790	S 2
4.3		3.7164LN, 3.7174LN, 3.7184LN	TiAl6V4, TiAl6V5Sn2, TiAl4MoSn2	TA10 to 13, TA28	TiAl6V5Sn2	AMS4928, AMS4971	R56400, R54790	S 3
5.1		2.4060, 2.4066	Nickel 200, 270, Ni99,6	NA 11, NA12	Ni200, Ni270	Nickel 200, Nickel 230	N02200, N02230	S 1
5.2		2.4630LN, 2.4602, 2.4650LN	Nimonic 75, Monel 400, Hastelloy C, Inconel 600	HR203, 3027-76		Nimonic 75,Monel400, Hastelloy, Inconel600	N06075, N10002, N04400, N06600	S 2
5.3		2.4668LN, 2.4631LN, 2.6554LN	Inconel 718, Nimonic 80A, Waspaloy	HR8, HR401, 601		Inconel 718, 625, Nimonic 80	N07718, N07080, N06625	S 3
6.1	EN 1652 – CW004A	2.0060, 2.0070	E-Cu57, SE-Cu	C101	5010	101	C10100, C1020	N 3
6.2	EN 1652 – CW612N	2.0380, 2.0360, 2.1030, 2.1080	CuZn39Pb2, CuZn40, CuSn8, CuSn6Zn	CZ120, CZ109,PB104	5168		C28000, C37710	N 4
6.3	EN 1652 – CW508L	2.0321, 2.0260	CuZn37, CuZn28	CZ108,CZ106	5150		C2600, C27200	N 3
6.4			Ampco 18, Ampco 25	AB1 type	5238, JM7-20			N 4
7.1	EN 485-2 – EN AW-1070A	3.0255	Al99,5	LMO, 1 B (1050A)	4005	EC, 1060, 1100	A91060, A91100	N 1
7.2	EN 755-2 – EN AW-5005	3.1355, 3.3525	AlCuMg2, AlMg2Mn0,8	LM5, 10, 12, N4 (5251)	4106, 4212	380, 520.0, 520.2, 2024, 6061	A03800, A05200, A92024	N 1
7.3	EN 1706 – EN AC-42000	3.2162.05, 3.2341.01	GD-AlSi8Cu, G-AlSi5Mg	LM2,4,16,18,21,22,, 24,25,26,27,L109	4244	319.0, 333.0, 319.1, 356.0	A03190, A03330, C35600	N 1
7.4	SS-EN 1706 – EN AC-47000	3.2581.01	G-AlSi18, G-AlSi12	LM6, 12,13, 20, 28, 29, 30	4260, 4261, 4262	4032, 222.1, A332.0	A94032, A02220, A13320	N 2
8.1				Polystyrene, Nylon, PVC Cellulose, Acetate & Nitrate		Polystyrene, Nylon, PVC		O
8.2				Ebonite, Tufnol, Bakelite		Bakelite		O
8.3				Kevlar, Printed Circuit boards		Kevlar		O
9,1				Ferrotic, Ferrotitanit				H
10.1				Graphite				O

切削速度表

DORMER

Vc																	
m/Min		5	8	10	15	20	25	30	40	50	60	70	80	90	100	110	150
Feet/Min		16	26	32	50	66	82	98	130	165	197	230	262	296	330	362	495
Ø		RPM															
mm	inch																
1,00		1592	2546	3183	4775	6366	7958	9549	12732	15916	19099	22282	25465	28648	31831	35014	47747
1,50		1061	1698	2122	3183	4244	5305	6366	8488	10610	12732	14854	16977	19099	21221	23343	31831
2,00		796	1273	1592	2387	3183	3979	4775	6366	7958	9549	11141	12732	14324	15916	17507	23873
2,50		637	1019	1273	1910	2546	3183	3820	5093	6366	7639	8913	10186	11459	12732	14006	19099
3,00		531	849	1061	1592	2122	2653	3183	4244	5305	6366	7427	8488	9549	10610	11671	15916
3,18	1/8	500	801	1001	1501	2002	2502	3003	4004	5005	6006	7007	8008	9009	10010	11011	15015
3,50		455	728	909	1364	1819	2274	2728	3638	4547	5457	6366	7276	8185	9095	10004	13642
4,00		398	637	796	1194	1592	1989	2387	3183	3979	4775	5570	6366	7162	7958	8754	11937
4,50		354	566	707	1061	1415	1768	2122	2829	3537	4244	4951	5659	6366	7074	7781	10610
4,76	3/16	334	535	669	1003	1337	1672	2006	2675	3344	4012	4681	5350	6018	6687	7356	10031
5,00		318	509	637	955	1273	1592	1910	2546	3183	3820	4456	5093	5730	6366	7003	9549
6,00		265	424	531	796	1061	1326	1592	2122	2653	3183	3714	4244	4775	5305	5836	7958
6,35	1/4	251	401	501	752	1003	1253	1504	2005	2506	3008	3509	4010	4511	5013	5514	7519
7,00		227	364	455	682	909	1137	1364	1819	2274	2728	3183	3638	4093	4547	5002	6821
7,94	5/16	200	321	401	601	802	1002	1203	1604	2004	2405	2806	3207	3608	4009	4410	6013
8,00		199	318	398	597	796	995	1194	1592	1989	2387	2785	3183	3581	3979	4377	5968
9,00		177	283	354	531	707	884	1061	1415	1768	2122	2476	2829	3183	3537	3890	5305
9,53	3/8	167	267	334	501	668	835	1002	1336	1670	2004	2338	2672	3006	3340	3674	5010
10,00		159	255	318	477	637	796	955	1273	1592	1910	2228	2546	2865	3183	3501	4775
11,11	7/16	143	229	287	430	573	716	860	1146	1433	1719	2006	2292	2579	2865	3152	4298
12,00		133	212	265	398	531	663	796	1061	1326	1592	1857	2122	2387	2653	2918	3979
12,70	1/2	125	201	251	376	501	627	752	1003	1253	1504	1754	2005	2256	2506	2757	3760
14,00		114	182	227	341	455	568	682	909	1137	1364	1592	1819	2046	2274	2501	3410
14,29	9/16	111	178	223	334	446	557	668	891	1114	1337	1559	1782	2005	2228	2450	3341
15,00		106	170	212	318	424	531	637	849	1061	1273	1485	1698	1910	2122	2334	3183
15,88	5/8	100	160	200	301	401	501	601	802	1002	1203	1403	1604	1804	2004	2205	3007
16,00		99	159	199	298	398	497	597	796	995	1194	1393	1592	1790	1989	2188	2984
17,46	11/16	91	146	182	273	365	456	547	729	912	1094	1276	1458	1641	1823	2005	2735
18,00		88	141	177	265	354	442	531	707	884	1061	1238	1415	1592	1768	1945	2653
19,05	3/4	84	134	167	251	334	418	501	668	835	1003	1170	1337	1504	1671	1838	2506
20,00		80	127	159	239	318	398	477	637	796	955	1114	1273	1432	1592	1751	2387
24,00		66	106	133	199	265	332	398	531	663	796	928	1061	1194	1326	1459	1989
25,00		64	102	127	191	255	318	382	509	637	764	891	1019	1146	1273	1401	1910
27,00		59	94	118	177	236	295	354	472	589	707	825	943	1061	1179	1297	1768
30,00		53	85	106	159	212	265	318	424	531	637	743	849	955	1061	1167	1592
32,00		50	80	99	149	199	249	298	398	497	597	696	796	895	995	1094	1492
36,00		44	71	88	133	177	221	265	354	442	531	619	707	796	884	973	1326
40,00		40	64	80	119	159	199	239	318	398	477	557	637	716	796	875	1194
50,00		32	51	64	95	127	159	191	255	318	382	446	509	573	637	700	955

硬度 / 抗拉强度

HV Vickers	HRC Rockwell	HB Brinell	N/ mm²	Tons/ sq. in.
940	68			
900	67			
864	66			
829	65			
800	64			
773	63			
745	62			
720	61			
698	60			
675	59			
655	58		2200	142
650		618	2180	141
640		608	2145	139
639	57	607	2140	138
630		599	2105	136
620		589	2070	134
615	56	584	2050	133
610		580	2030	131
600		570	1995	129
596	55	567	1980	128
590		561	1955	126
580		551	1920	124
578	54	549	1910	124
570		542	1880	122
560	53	532	1845	119
550		523	1810	117
544	52	517	1790	116
540		513	1775	115
530		504	1740	113
527	51	501	1730	112
520		494	1700	110
514	50	488	1680	109
510		485	1665	108
500		475	1630	105
497	49	472	1620	105
490		466	1595	103
484	48	460	1570	102
480		456	1555	101
473	47	449	1530	99
470		447	1520	98
460		437	1485	96
458	46	435	1480	96
450		428	1455	94
446	45	424	1440	93
440		418	1420	92

HV Vickers	HRC Rockwell	HB Brinell	N/ mm²	Tons/ sq. in.
434	44	413	1400	91
423	43	402	1360	88
413	42	393	1330	86
403	41	383	1300	84
392	40	372	1260	82
382	39	363	1230	80
373	38	354	1200	78
364	37	346	1170	76
355	36	337	1140	74
350		333	1125	73
345	35	328	1110	72
340		323	1095	71
336	34	319	1080	70
330		314	1060	69
327	33	311	1050	68
320		304	1030	67
317	32	301	1020	66
310	31	295	995	64
302	30	287	970	63
300		285	965	62
295		280	950	61
293	29	278	940	61
290		276	930	60
287	28	273	920	60
285		271	915	59
280	27	266	900	58
275		261	880	57
272	26	258	870	56
270		257	865	56
268	25	255	860	56
265		252	850	55
260	24	247	835	54
255	23	242	820	53
250	22	238	800	52
245		233	785	51
243	21	231	780	50
240		228	770	50
235		223	755	49
230		219	740	48
225		214	720	47
220		209	705	46
215		204	690	45
210		199	675	44
205		195	660	43
200		190	640	41

公差

	Ø mm							
	> 1 ≤ 3	> 3 ≤ 6	> 6 ≤ 10	> 10 ≤ 18	> 18 ≤ 30	> 30 ≤ 50	> 50 ≤ 80	> 80 ≤ 120
公差	μm							
e8	-14 / -28	-20 / -38	-25 / -47	-32 / -59	-40 / -73	-50 / -89	-60 / -106	-72 / -126
f6	-6 / -12	-10 / -18	-13 / -22	-16 / -27	-20 / -33	-25 / -41	-30 / -49	- 36 / -58
f7	-6 / -16	-10 / -22	-13 / -28	-16 / -34	-20 / -41	-25 / -50	-30 / -60	-36 / -71
h6	0 / -6	0 / -8	0 / -9	0 / -11	0 / -13	0 / -16	0 / -19	0 / -22
h7	0 / -10	0 / -12	0 / -15	0 / -18	0 / -21	0 / -25	0 / -30	0 / -35
h8	0 / -14	0 / -18	0 / -22	0 / -27	0 / -33	0 / -39	0 / -46	0 / -54
h9	0 / -25	0 / -30	0 / -36	0 / -43	0 / -52	0 / -62	0 / -74	0 / -87
h10	0 / -40	0 / -48	0 / -58	0 / -70	0 / -84	0 / -100	0 / -120	0 / -140
h11	0 / -60	0 / -75	0 / -90	0 / -110	0 / -130	0 / -160	0 / -190	0 / -220
h12	0 / -100	0 / -120	0 / -150	0 / -180	0 / -210	0 / -250	0 / -300	0 / -350
k10	+40 / 0	+48 / 0	+58 / 0	+70 / 0	+84 / 0	+100 / 0	+120 / 0	+140 / 0
k12	+100 / 0	+120 / 0	+150 / 0	+180 / 0	+210 / 0	+250 / 0	+300 / 0	+350 / 0
m7	+2 / +12	+4 / +16	+6 / +21	+7 / +25	+8 / +29	+9 / +34	+11 / +41	+13 / +48
js14	+/- 125	+/- 150	+/- 180	+/- 215	+/- 260	+/- 310	+/- 370	+/- 435
js16	+/- 300	+/- 375	+/- 450	+/- 550	+/- 650	+/- 800	+/- 950	+/- 1100
H7	+10 / 0	+12 / 0	+15 / 0	+18 / 0	+21 / 0	+25 / 0	+30 / 0	+35 / 0
H8	+14 / 0	+18 / 0	+22 / 0	+27 / 0	+ 33 / 0	+39 / 0	+46 / 0	+54 / 0

1μm = 0.001mm

钻头

钻削的注意事项

1. 必须根据要加工的材料、机床的性能和所用的冷却液，来选择最适合该加工场合的钻头。
2. 若在工件和机床主轴之间存在浮动现象，则不但会损坏钻头，也会损坏工件和机床。必须在任何时候都确保最高的稳固性，选择尽 可能最短的钻头可提高稳固性。
3. 钻夹头是钻削加工中的一个重要因素，不允许钻头在钻夹头内有任何的滑动或窜动现象。
4. 建议按照特定钻削加工的要求，采用合适的冷却液或润滑液。使用冷却液或润滑液时，要确保足够的流量，特别是在钻尖部分。
5. 为了确保正确的钻削加工，钻削时必须能顺利排屑，切屑不得堵塞在钻槽内。
6. 在对钻头进行重磨时，要始终确保磨出正确的钻尖几何形状，并且要把所有的磨损部分都磨掉。

钻孔尺寸

随着钻头的几何形状、材料和涂层的不断发展，有可能用钻头打出尺寸更精确的孔。一般来说，具有标准几何形状的钻头可打出 H12 的孔。如果钻头拥有综合性的优异配置，则在其他条件都有利的情况下，甚至可以打出 H8 的孔。为了对此有更好的了解，下面给出了各种钻头类型以及它们可达到的钻孔公差：

- HSS 常规用途钻头 – H12
- HSS / HSS-E 抛物线槽形深孔钻头 – H10
- 整体硬质合金高性能涂层 – H8/H9

深孔钻削的策略

在钻削深孔时，可采用不同的方法来钻到所要求的深度。下面介绍了四种方法，均可钻到 10 x 钻头直径的深度。

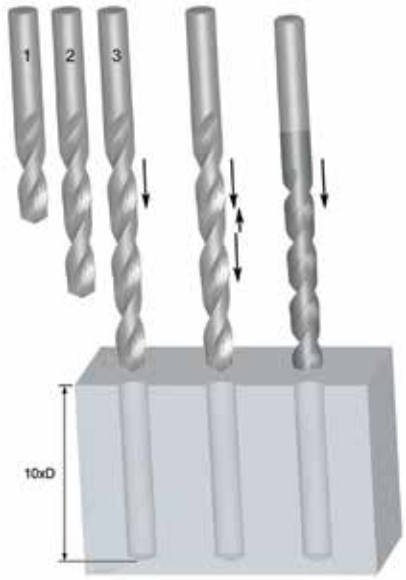

	成组钻削	成组钻削
钻头数量	3 (2.5 x D, 6 x D, 10 x D)	2 (2.5 x D, 10 x D)
钻头类型	标准几何形状， 常规用途	标准几何形状， 常规用途
+ / -	代价高 耗时较多	较高性价比 较快

	反复退刀的钻削	一次进刀的钻削
钻头数量	1 (10 x D)	1 (10 x D)
钻头类型	标准几何形状， 常规用途	专用刀具
+ / -	耗时较多	高性价比 快速

钻削的问题解答

问题	原因	纠正
扁尾部分断裂或扭曲	钻头柄部和夹套之间的配合较差	确保钻头柄部和夹套表面都比较干净，没有损坏现象
钻心部分有裂痕	进给量太大	把进给量减少到最佳值
	初始后角太小	重磨至正确规范
	心厚减薄过多	重磨至正确规范
	钻尖部分受到过大的撞击	防止钻尖部分受到撞击，在把锥柄钻插入 / 拔出主轴时要特别注意
钻尖外角磨损	切削速度太高	把切削速度降低到最佳值，或许可以增大进给量
钻尖外角崩裂	工件夹持不稳固	不使工件有走动现象
切削刃有崩口现象	初始后角太大	重磨至正确规范
钻头在钻槽根部断裂	切屑堵在钻槽内	采用多次退刀法或用成组钻头来加工
	钻头打滑	确保钻头牢固地夹持在钻夹头和主轴内
钻孔表面有螺旋状痕迹	进给量太小	增大进给量
	定位精度较差	钻孔前先用定心钻加工
钻孔尺寸过大	钻尖几何形状不正确	检查钻尖形状
	排屑情况不佳	调整切削速度、进给量和退刀次数，以更好地控制切屑形状

铰刀

铰削的注意事项

为了得到最好的铰削效果，必须使铰刀能真正地进行 “工作”。常见 的错误是在预钻孔时留下的铰削余量太少。如果铰削余量不足的 话，铰刀在加工时实际上只是在对孔壁作摩擦而不是切削。这样铰刀会很快磨损，也就丧失了正确的直径尺寸。同样重要的是，预钻孔的铰削余量也不能留得太多 (见后面的铰削余量表)。

1. 为特定应用场合选择最合适的铰刀型号，并选择最佳的速度和进给量，确保预钻孔有正确的直径尺寸。
2. 工件必须夹持牢固，机床主轴不应有间隙。
3. 夹持直柄铰刀的夹头必须是高质量的，若铰刀在夹头内滑动的话，在作自动进给时铰刀可能会断裂。
4. 应使铰刀伸出机床主轴的悬伸量尽可能最短。
5. 采用推荐的冷却液以延长铰刀的寿命，并确保冷却液能到达切削刃部位。由于铰削不是重负荷切削，采用 40：1 稀释的乳化油一般 就能满足要求。在对灰铸铁作干切削时，也可采用压缩空气来作冷却。
6. 不要让切屑堵塞铰刀的容屑槽。
7. 在对铰刀进行重磨之前，先把它放在双顶尖之间检查其同心度。在大部分情况下，只需对铰刀的导锥部分进行修磨。
8. 保持铰刀的锋利度，经常修磨铰刀会有较好的经济性。要知道铰刀只用其锥形部分来进行切削工作，而不是其圆柱刃带部分，这一点很重要。因此只有铰刀的锥形部分需要修磨。修磨的精度对铰孔质量和铰刀寿命都有很大影响。

铰削余量

推荐的铰削余量与工件材料和预钻孔的表面光洁度有关。下表给出了确定铰削余量的一般原则：

铰孔尺寸 (mm)	采用预钻孔时	采用预扩孔时
小于 4	0.1	0.1
大于 4 至 11	0.2	0.15
大于 11 至 39	0.3	0.2
大于 39 至 50	0.4	0.3

铰孔尺寸 (英寸)	采用预钻孔时	采用预扩孔时
小于 3/16	0.004	0.004
3/16 至 ½	0.008	0.006
½ 至 1.½	0.010	0.008
1.½ 至 2	0.016	0.010

公差极限

1. 在标准铰刀的切削直径上
   在测量直径 (d1) 时，要横跨圆周刃带来测量紧邻铰刀导锥或圆锥导 向的圆柱部分尺寸。铰刀公差按照 DIN 1420，可加工出 H7 的孔。

铰刀公差			
直径 (mm)		公差极限 (mm)	
大于	小于等于	上公差 +	下公差 +
	3	0.008	0.004
3	6	0.010	0.005
6	10	0.012	0.006
10	18	0.015	0.008

铰刀公差			
直径 (mm)		公差极限 (mm)	
大于	小于等于	上公差 +	下公差 +
18	30	0.017	0.009
30	50	0.021	0.012
50	80	0.025	0.014

2. 在 H7 的孔上
   对于精加工的孔来说，最常见的公差就是 H7 (见下表)。若需其他的公差，可用第 3 点下面的图表来计算出铰刀的公差位置和公差带宽度。

孔的公差			
直径 (mm)		公差极限 (mm)	
大于	小于等于	上公差 +	下公差 +
	3	0.010	0
3	6	0.012	0
6	10	0.015	0
10	18	0.018	0

孔的公差			
直径 (mm)		公差极限 (mm)	
大于	小于等于	上公差 +	下公差 +
18	30	0.021	0
30	50	0.025	0
50	80	0.030	0

3. 如果需要铰出特殊的孔公差，比如 D8，可利用这里的经验公式来确定此特殊铰刀的尺寸：

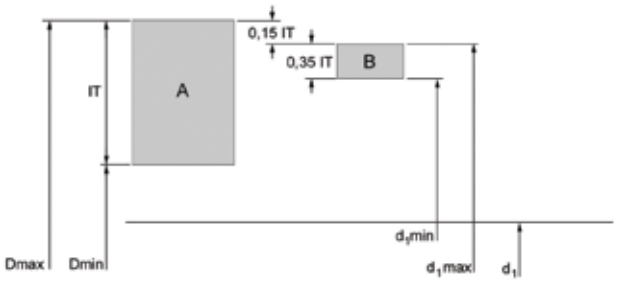

A = 孔的公差
B = 铰刀公差
IT = 公差带宽度
Dmax = 孔的最大直径
Dmin = 孔的最小直径
d_1 = 公称直径
$d_1$max = 铰刀最大直径
$d_1$min = 铰刀最小直径

	直径的公差带宽度							
公差带宽度 (微米)	大于 1 至 3	大于 3 至 6	大于 6 至 10	大于 10 至 18	大于 18 至 30	大于 30 至 50	大于 50 至 80	大于 80 至 120
IT5	4	5	6	8	9	11	13	15
IT6	6	8	9	11	13	16	19	22
IT7	10	12	15	18	21	25	30	35
IT8	14	18	22	27	33	39	46	54
IT9	25	30	36	43	52	62	74	87
IT10	40	48	58	70	84	100	120	140
IT11	60	75	90	110	130	160	190	220
IT12	100	120	150	180	210	250	300	350

例如：10 mm 的孔，公差为 D8，最大直径 = 10.062，最小直径 = 10.040，孔公差 (IT8) = 0.022

最大尺寸极限： 0.15 x 孔公差 (IT8) = 0.0033，圆整后 = 0.004
最小尺寸极限： 0.35 x 孔公差 (IT8) = 0.0077，圆整后 = 0.008

铰刀最大尺寸极限 = 10.062 - 0.004 = 10.058
铰刀最小尺寸极限 = 10.058 - 0.008 = 10.050

铰削的问题解答

问题	原因	纠正
扁尾部分断裂或扭曲	铰刀柄部和夹套之间的配合较差	确保铰刀柄部和夹套表面都比较干净，没有损坏现象
铰刀磨损较快	铰削余量太少	增加铰削余量
铰孔直径过大	切削刃的高度偏差过大	重磨至正确的尺寸规范
	机床主轴有位移现象	修理并纠正主轴的位移
	刀具夹头偏斜	更换刀具夹头
	铰刀柄部损坏	更换铰刀或重磨柄部
	铰刀的圆度不好	更换或重磨铰刀
	导锥角不对称	重磨至正确的尺寸规范
	进给量过大或切削速度过高	根据样本来调整切削条件
铰孔直径过小	铰削余量太少	增加铰削余量
	铰削时产生过多热量，致使孔先胀大再收缩	加大冷却液流量
	铰刀磨损，导致其直径变小	重磨至正确的尺寸规范
	进给量太小或切削速度太低	根据样本来调整切削条件
	预钻孔太小	把孔钻大一点以减少铰削余量
铰出的孔呈椭圆形或圆锥形	机床主轴有位移现象	修理并纠正主轴的位移
	铰刀和孔之间没有对正	把铰刀与孔对正
	导锥角不对称	重磨至正确的尺寸规范
铰孔光洁度较差	铰削余量太大	把孔钻大一点以减少铰削余量
	铰刀已磨损	重磨至正确的尺寸规范
	切削前角太小	重磨至正确的尺寸规范
	乳化液或切削油被过度稀释	提高其浓度百分比
	进给量太小和 / 或速度太低	根据样本来调整切削条件
	切削速度太高	根据样本来调整切削条件
铰刀转动受阻并断裂	铰刀已磨损	重磨至正确的尺寸规范
	铰刀的倒锥度太小	检查并替换 / 修磨刀具
	铰刀的刃带太宽	检查并替换 / 修磨刀具
	工件材料对铰刀有挤压趋向	采用可调节铰刀，以对此变位现象作适当补偿
	预钻孔太小	把孔钻大一点以减少铰削余量
	工件材料的均质性不好，含有较硬的夹杂物	采用整体硬质合金铰刀

螺纹铣削

螺纹铣削的一般提示

1. 螺纹铣削是通过铣刀的圆弧插补生成螺纹并在周围磨出特定螺纹几何形状的流程。

2. 必须拥有一台可生成圆弧路径的数控机床，才能使用螺纹铣刀。

3. 大多数现代数控机床都配备用于螺纹铣削的加工循环

4. 详情请查阅手册或联系机床供应商

功能与优点

1. 螺纹铣削提高了可靠性并延长了刀具寿命

2. 螺纹铣刀产生的切屑较小，实现无故障螺纹加工

3. 可以使用精确坐标调整公差

4. 可以生成直达孔底的全螺纹

5. 能够加工各种各样的材料

6. 一把刀具可制作尺寸不同而螺距相同的螺纹

7. 一把刀具可制作右旋和左旋螺纹

8. 某些螺纹铣刀也可以加工入口倒锥（J200、J205、J260）

选择合适的刀具

螺纹铣刀根据型号、直径（d1）和螺距（P）会有一个部件代码

部件代码是订购刀具时要用到的编号

务必查阅产品目录，确保螺纹尺寸正确

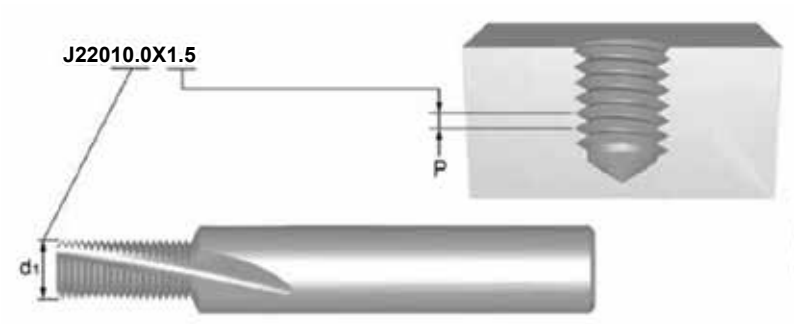

这款螺纹铣刀可用于 ≥ M12x1.5
（M14x1.5、M18x1.5等）
的螺纹

使用Rprg进行编程

- 为便于调整螺纹公差，务必编入半径校正程序
- Rprg值是新刀具的起始值，印于刀柄上。应将该值输入刀具内存偏置
- Rprg以螺纹理论上的零位线为准，表明使用Rprg进行编程时，螺纹决不会出现尺寸过大的情况，但通常螺距较小
- 这意味着稍微修改编程坐标，便可制作所需尺寸的螺纹

建议

- 务必使用正确的切削参数（参见第198页上的切削参数表）
- 使用针对螺纹直径而建议的钻孔尺寸，如传统丝锥那样
- 为便于调整螺纹公差，务必从螺纹铣刀刀柄所印的Rprg值开始
- 使用量规检查第一个螺纹的公差，以确定是否需要校正半径。螺纹铣刀报废之前，可进行2到3次半径校正
- 干切削时，建议使用压缩空气帮助去除切屑
- 对难加工材料进行螺纹加工时，建议走刀2到3次

螺纹加工

螺纹加工的注意事项

成功的螺纹加工取决于多种因素，所有这些因素都会影响到最终产品的质量。

1. 根据工件材料和螺孔类型，即通孔还是盲孔，在材料分类图表中选择正确的丝锥型号。
2. 确保工件被牢固夹紧，工件的侧向移动可能导致丝锥断裂，或导致较差的螺纹加工质量。
3. 在相应的样本页上选择正确的底孔钻头尺寸。要始终确保把工件材料的加工硬化现象压制在最低程度。
4. 根据相应的样本页来选择正确的切削速度。
5. 采用合适的切削液，以进行正确的螺纹加工。
6. 在数控机床上进行螺纹加工时，确保给程序选择正确的进给量。 如果采用攻丝附件，建议的进给量为螺距的 95% 至 97%，这样可 使丝锥走出它自己的螺距。
7. 若有可能的话，应把丝锥夹持在优质的、有扭矩限制的攻丝附件内，确保丝锥可在轴向作自由移动，并使丝锥与孔保持垂直。万一碰到丝锥在盲孔内 “触底” 的意外情况，也能保护丝锥不会断裂。
8. 确保丝锥平滑地进入孔内，因为不均匀的进刀会导致螺孔出现 “喇叭口” 现象。

丝锥公差与公差内螺纹（螺母）

公差等级，丝锥			公差，内螺纹（螺母）					应用范围
ISO	DIN	ANSI BS						
ISO 1	4 H	3 B	4 H	5 H				适合无容差
ISO 2	6 H	2 B	4 G	5 G	6 H			一般适用
ISO 3	6 G	1 B			6 G	7 H	8 H	适合带较大容差
-	7 G	-				7 G	8 G	不适用于以下处理和涂层

丝锥钻孔的问题汇总

问题	原因	纠正
尺寸偏大	公差不正确	选择螺纹公差带偏下一点的丝锥
	轴向进给不正确	把进给率降低5-10%，或是增加丝锥夹头上的压力
	所用丝锥的型号有误	用罗建丝锥来加工通孔，用螺旋槽丝锥来加工盲孔，用涂层丝锥来防止产生积屑瘤。可根据产品样本或选刀光盘来选择正确的替代丝锥。
	丝锥与孔的中心没有对正	检查丝锥夹头，使丝锥的中心正确对正孔的位置。
	缺少冷却	采用较好的冷却液，以防止产生积屑瘤。可参见本手册有关冷却液的章节
	丝锥的切削速度太慢	按照产品样本或选刀光盘的推荐来选择切削速度
尺寸偏小	所用的丝锥型号有误	用螺尖丝锥来加工通孔，用螺旋槽丝锥来加工盲孔，用涂层丝锥来防止产生积屑瘤，选用前角较大的丝锥。可根据产品样本或选刀光盘来选择正确的替代丝锥
	公差不正确	选择螺纹公差带偏上一点的丝锥，尤其是在加工铸铁、不锈钢等极少有尺寸偏大倾向的材料时
	缺少冷却或冷却液不正确	采用较好的冷却液，以防止切屑堵塞在孔内。可参见本手册中有关冷却液的章节
	攻丝底孔过小	底孔钻头的直径采用最大值，可参见底孔钻头推荐表
	工件材料在攻丝后发生收缩	按照产品样本或选刀光盘的推荐来选择正确的替代丝锥
刀刃崩口	所用丝锥的型号有误	选用前角较小的丝锥，选用切削锥较长的丝锥。用螺尖丝锥来加工通孔，用螺旋槽丝锥来加工盲孔，以防止切屑堵塞。可根据产品样本或选刀光盘来选择正确的替代丝锥
	缺少冷却或冷却不正确	采用较好的冷却液，以防止产生积屑瘤。可参见本手册中有关冷却液的章节
	丝锥碰到孔的底部	增加钻孔深度，或是减少攻丝深度
	工件表面有加工硬化现象	降低切削速度，适用涂层丝锥，采用较好的冷却液。可参见本手册有关不锈钢加工的章节。
	丝锥在退刀时有堵屑现象	在丝锥退刀过程中要避免突然的回转动作
	切削锥与孔的进口处相撞	检查轴向位置，减少丝锥顶尖和孔中心的轴向偏差
	攻丝底孔的尺寸太小	底孔钻头的直径采用最大值，可参见底孔钻头推荐表

丝锥钻孔的问题汇总

问题	原因	纠正
断裂	丝锥磨损	换用新丝锥或对老丝锥进行重磨
	缺少冷却	选用较好的冷却液，以防止产生积屑瘤和切屑堵塞的现象。可参见本手册中有关润滑液的章节
	丝锥碰到孔的底部	增加钻孔深度，或减少攻丝深度
	丝锥的切削速度太高	降低丝锥的切削速度，可按照产品样本或选刀光盘的推荐来选择正确的丝锥切削速度
	工件表面有加工硬化现象	降低切削速度，使用涂层丝锥，采用较好的冷却液。可参见本手册中有关不锈钢加工的章节
	攻丝底孔的尺寸太小	底孔钻头的直径采用最大值，可参见底孔钻头推荐表
	丝锥的扭矩太大	选用带扭矩调节离合器的攻丝附件来夹持丝锥
	工件材料在攻丝后发生收缩	按照产品样本或选刀光盘的推荐来选择正确的替代丝锥
丝锥磨损快	所用丝锥的型号有误	选用前角较小的丝锥，或是选用后角较大的丝锥，或是选用切削锥较长的丝锥。也可选用涂层丝锥。根据产品样本或选刀光盘来选择正确的替代丝锥
	缺少冷却	先用较好的冷却液，以防止在丝锥切削刃上产生积屑瘤或是热应力。可参见本手册中有关冷却液的章节
	丝锥的切削速度太高	降低丝锥的切削速度，可以按照产品样本或选刀光盘的推荐来选择正确的丝锥切削速度。
产生积屑瘤	所用丝锥的型号有误	选用前角较小的丝锥，或是选用后角较大的丝锥。可根据产品样本或选刀光盘来选择正确的提到丝锥
	缺少冷却	选用较好的冷却液，以防止积屑瘤的产生。可参见本手册中有关冷却液的章节
	丝锥的表面处理不合适	可参见本手册中有关刀具表面处理的章节
	丝锥的切削速度太低	按照产品样本或选刀光盘的推荐来选择合适的切削速度

铣削

铣削的注意事项

铣削是对工件表面进行加工的方法。加工时铣刀以相对较高的速度作旋转运动，工件则以相对较低的速度作进给运动，采用渐进的方式从工件上切除预定的加工余量。
铣削加工的特点是，每个铣刀齿都切除其分配到的那部分加工余量，并产生较小的零碎切屑。

铣刀的类型

下面是三个基本的铣削加工方法：（A）圆周铣削,（B）面铣刀 和（C）立铣刀。

A

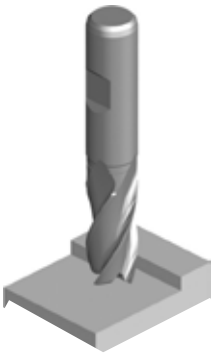

B

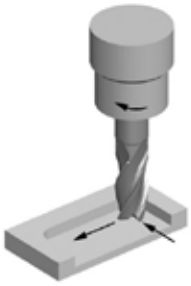

C

在作圆周铣削时（也称之为阔面铣削），铣刀的旋转轴线与被加工表面平行。在铣刀圆周上分布着一定数量的刀齿，每个刀齿都象是一个加工平面的单刃切削刀具。用作圆周铣削的铣刀可以是直齿的，也可以使螺旋齿的，它们可分别作正交的或斜交的切削运动。

在作面铣削时，铣刀安装在主轴上，该主轴的旋转轴线与被加工表面垂直。切削刃则位于铣刀的圆周上和端面上，对工件的表面进行铣削。

在作端铣削是，铣刀通常绕垂直于工件表面的轴线作旋转运动，但也可将铣刀倾斜，以加工出锥形表面。这种铣刀的刀齿位于铣刀端面上和刀体圆周上。

应用场合

金属切除率MRR和应用场合有很大关系。对于每种不同的应用场合，都有不同的金属切除率MRR。金属切除率随铣刀与工件的接触区域大小而变化。在最新出版的多马公司产品样本中，用简单的图标来表示不同的应用场合。

侧铣	面铣	槽铣	插入铣	斜向铣
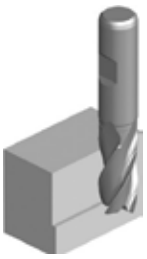		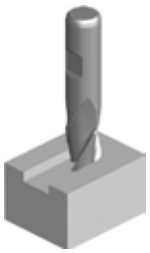	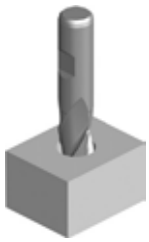	
径向切削深度应小于立铣刀直径的0.25倍。	径向切削应不大于立铣刀直径的0.9倍，轴向切深应小于立铣刀直径的0.1倍	加工凹槽或键槽，其径向切深等于立铣刀的直径。	若立铣刀带中心切削刃时，可用来对工件作钻削加工。在做这种插入式铣削时，应把铣刀的进给量减半。	立铣刀同时在轴向和径向切入工件

铣削的常见问题

问题	原因	纠正
断裂	铣削余量太大	减少每齿进给量
	进给速度太快	放慢进给速度
磨损	铣刀的槽长或总长太长了	把铣刀刀柄多夹进夹头一点，或采用较短的铣刀
	工件材料太硬	查看样本或选刀软件，以得到正确的切削参数
	切削速度和进给量不正确	查看样本或选刀软件，以得到正确的切削参数
	排屑不畅	重新定位冷却液管路
	采用逆铣法	改为顺铣法
	铣刀螺旋角不正确	参见样本/选刀软件中的推荐值，选择正确的替代刀具
崩刃	进给量太大	减少进给量
	振动	降低转速
	切削速度太低	提高转速
	采用逆铣法	改为顺铣法
	刀具刚度问题	选用更短的刀具，或把刀具柄部更深地插入刀具夹头
	工件刚度问题	把工件牢固地夹紧
刀具寿命短	难加工的工件材料	参见样本或选刀软件，以选择正确的替代刀具
	切削角度和主后角不正确	改为正确的切削角度
	铣刀和工件之间有摩擦	采用涂层刀具
表面光洁度太差	进给太快	放慢至正确的进给速度
	切削速度太慢	提高切削速度
	切屑拉伤	减少切削余量
	刀具磨损	更换或重磨工具
	刀刃上产生积屑瘤	换用螺旋角较大的刀具
	切屑粘结	加大冷却液流量

常用问题

问题	原因	纠正
加工精度差	刀具偏斜	采用较短的刀具，或是把刀具柄部更深地插入刀具夹头
	铣刀的槽数太少	采用刀槽数更多的铣刀
	刀具夹头松动或磨损	修理或更换刀具夹头
	刀具夹头的刚度较差	换用更短的或刚度更好的刀具夹头
	主轴的刚度较差	采用较大的主轴
振动	进给量和切削速度太高	参见样本或选刀软件，对进给量和切削速度进行修正
	刀具的槽长或总长太长了	把刀具柄部多夹进刀具夹头一点，或采用较短的铣刀
	切削深度太大	减少切削深度
	刚度不足（机床和刀具夹头）	检查刀具夹头，必要时加以更换

硬质合金旋转锉

硬质合金旋转锉的一般提示

硬质合金旋转锉广泛用于各种材料零件的准备和精加工。

通常为手用，且安装于气动刻磨机中

功能与优点

1. 坚韧的淬硬钢刀柄提高了刚度并降低了弯曲或振动的风险
2. 精准打磨的刀柄改进了抓握，并降低了旋转的可能性
3. 特制钎焊元件可防止高温故障，同时提高了承受压力和撞击的能力
4. 通用的双面开口槽型适合各种材料和应用
5. 特定于材料的槽型也适合钢（ST）、不锈钢（VA）、铝（AL）和玻璃纤维（GRP）
6. 涂有TiAlN涂层，延长了加工研磨材料时的刀具寿命
7. 球头旋转锉打磨成“跳式”槽型
8. 此槽型有助于使切削力朝向旋转锉中心，从而改进切削作用并降低切屑堆积和堵塞的可能性

跳式

普通

安全第一

1. 高速旋转刀具若使用不当，会造成危险
2. 务必先断开刻磨机与气源的连接，方可更换旋转锉
3. 检查刻磨机的状况，如有可能，使用振动小的刻磨机
4. 务必使用适当的防护设备，并确保附近工作的任何人也得到保

必须始终穿戴个人防护设备。

建议

- 务必使用适当额定速度的刻磨机
- 刻磨机的日常维护很重要，确保进行润滑且轴承未磨损
- 更换旋转锉时，务必清洁刻磨机的夹紧螺母、夹头和内丝锥
- 尽量避免旋转锉遭受机械冲击和重物撞击
- 确保旋转锉不至于过热，以尽量避免热冲击
- 不要将旋转锉插入工件材料太深或将旋转锉卡入拐角或沟槽

旋转锉使用期间的故障排除

问题	原因
旋转锉的刀齿剥落	过低转速运行，会引起跳动
	偏心度（心轴、夹头或轴承磨损）
	旋转锉插入和卡入工件
旋转锉的刀齿堵塞	槽长或总长过长
	为工件材料选择的槽型不正确
过早磨损	运行转速对于旋转锉和工件材料的尺寸而言过高
	偏心度（心轴、夹头或轴承磨损）
刀头与刀柄分离	过高转速运行，导致过热
	长时间运行，导致过热

Brasileiro			Dureza	Resistência à tração	
Grupos de Materiais (AMG)			HB	N/mm²	ISO
1. Aço	1.1	Aço macio magnético	< 120	< 400	P 1
	1.2	Aço estrutural, Aço cementado	< 200	< 700	P 1
	1.3	Aço-carbono	< 250	< 850	P 2
	1.4	Aço de liga	< 250	< 850	P 3
	1.5	Aço de liga, Aço temperado	> 250 < 350	> 850 < 1200	P 4
	1.6	Aço de liga, Aço temperado	> 350	> 1200 < 1620	H 1
	1.7	Aço de liga temperado	49-55HRC	> 1620	H 3
	1.8	Aço de liga temperado	55-63HRC	> 1980	H 4
2.Aço inox-idável	2.1	Aço inoxidável de maquinagem fácil	< 250	< 850	M 1
	2.2.	Austenítico	< 320	< 1100	M 3
	2.3	Ferrítico + Austenítico + Martensítico	< 300	< 1000	M 2
	2.4		>320 <410	>1100 <1400	S 2
3.Ferro fundido	3.1	Grafite lamelar	< 150	> 500	K 1
	3.2	Grafite lamelar	> 150 <300	> 500 < 1000	K 2
	3.3	Grafite nodular/ Ferro fundido maleável	< 200	< 700	K 3
	3.4	Grafite nodular/ Ferro fundido maleável	> 200 < 300	> 700 < 1000	K 4
4.Titânio	4.1	Titânio, sem liga	< 200	< 700	S 1
	4.2	Titânio, com liga	< 270	< 900	S 2
	4.3	Titânio, com liga	> 270 < 350	> 900 ≤ 1250	S 3
5.Níquel	5.1	Níquel, sem liga	< 150	< 500	S 1
	5.2	Níquel, com liga	< 270	> 900	S 2
	5.3	Níquel, com liga	> 270 < 350	> 900 < 1200	S 3
6.Cobre	6.1	Cobre	< 100	< 350	N 3
	6.2	Latão beta, bronze	< 200	< 700	N 4
	6.3	Latão alfa	< 200	< 700	N 3
	6.4	Bronze de alta resistência	< 470	< 1500	N 4
7.Alumínio Magnésio	7.1	Al, Mg, sem liga	< 100	< 350	N 1
	7.2	Al com liga, Si<0.5%	< 150	< 500	N 1
	7.3	Al com liga, Si>0.5%<10%	< 120	< 400	N 1
	7.4	Al com liga, Si>10% reforçadas com monocristais filiformes, ligas de Al/Mg	< 120	< 400	N 2
8.Materiais sintéticos	8.1	Termoplásticos	---	---	O
	8.2	Plásticos termoduros	---	---	O
	8.3	Materiais plásticos reforçados	---	---	O
9.Materiais duros	9,1	Cerametal (metalocerâmica)	< 550	< 1700	H
10.Grafite	10.1	Grafite standard	---	< 100	O

DORMER

EXEMPLOS DE MATERIAIS DE PEÇAS A USINAR

AMG	EN	W Nr.	DIN	BS	SS	USA	UNS	ISO
1.1		1.1015, 1.1013	Rfe60, Rfe100	230Mo7, 050A12	1160	Leaded Steels	G12120	P 1
1.2	EN 10 025 – S235JRG2	1.1012, 1.1053, 1.7131	St37-2, 16MnCr5, St50-2	060A35, 080M40, 4360-50B	1312, 1412, 1914	135, 30	G10100	P 1
1.3	EN 10 025 – E295	1.1191, 1.0601	CK45, C60	080M46, 080A62	1550, 2142, 2172	1024, 1060, 1061	G10600	P 2
1.4	EN 10 083-1 – 42 CrMo 4 - EN 10 270-2	1.7225, 1.3505, 1.6582, 1.3247	42CrMo4, 100Cr6, 34CrNiMo6, S2-10-1-8	708M40/42, 817M40, 534A99, BM2, BT42	1672-04, 2090, 2244-02, 2541-02	4140, A2, 4340, M42, M2	G41270, G41470, T30102, T11342	P 3
1.5	EN ISO 4957 – HS6-5-2 - EN-ISO 4957 – HS6-5-2-5	1.2510, 1.2713, 1.3247, 1.2080	100MnCrW12, 55NiCrMoV6, X210Cr12, S2-10-1-8	B01, BM2, BT42, 826 M40, 830M31	2244-04, 2541-03, 2550, 2722, 2723	01, L6, M42, D3, A2, M2, 4140, 8630	G86300, T30102' T11302, T30403, T11342	P 4
1.6	EN-ISO 4957 – HS2-9-1-8	1.2510, 1.2713, 1.3247, 1.2080	100MnCrW12, X210Cr12, S2-10-1-8	801, 826 M40, 830M31	2244-05, 2541-05, , HARDOX 400	01, L6, M42, D3, 4140, 8130	T30403, G41400, J14047	H 1
1.7	EN-ISO 4957 – HS2-9-1-8	1.2510	100MnCrW4	BO1, BD3, BH13	HARDOX 500			H 3
1.8	EN-ISO 4957 – X40CrMoV5-1	1.3343, 1.2344	S6-5-2, GX40CrMoV5-1	BM2, BH13	2242 HARDOX 600			H 4
2.1	EN 10 088-3 – X14CrMoS17	1.4305, 1.4104	X10CrNiS189, X12CrMoS17	303 S21 , 416 S37	2301, 2312, 2314, 2346, 2380	303, 416, 430F	S30300, S41600, S43020	M 1
2.2.	EN 10 088-2,0 -3 – 1.4301+AT	1.4301, 1.4541, 1.4571	X5CrNi189 X10CrNiMoTi1810	304 S15, 321 S17, 316 S, 320 S12	2310, 2333, 2337, 2343, 2353, 2377	304, 321, 316	S30400, S32100, S31600	M 3
2.3	EN 10 088-3 – 1.4460	1.4460, 1.4512, 1.4582	XBCrNiMo275, X4CrNiMoN6257	317 S16, 316 S16	2324, 2387, 2570	409, 430, 436	S40900, S4300, S43600	M 2
2.4	EN 1.4547	1.4547	X2CrNiMo20-18-6	HR41	2378	17-4PH	S31254	S 2
3.1	EN 1561 – EN-JL1030	0.6010, 0.6040	GG10, GG40	Grade150, Grade 400	0120, 0212, 0814	ASTM A48 class 20	F11401, F12801	K 1
3.2	EN 1561 – EN-JL1050	0.6025, 0.6040	GG25, GG40	Grade200, Grade 400	0125, 0130, 0140, 0217	ASTM A48 class 40, STM A48 class 60	F12801, F14101	K 2
3.3	EN 1561 – EN-JL2040	0.7040, 0.7070, 0.8145, 0.8045	GGG40, GGG70, GTS45-06, GTW45-07	420/12, P440/7, 700/2, 30g/72	0219, 0717, 0727, 0732, 0852	ASTM A220 grade 40010, ASTM A602 grade M4504	F22830, F20001	K 3
3.4	EN 1561 – EN-JL2050	0.7040, 0.7070, 0.8145, 0.8045	GGG40, GGG70, GTS45-06, GTW45-07	420/12, P440/7, 700/2, 30g/72	0221, 0223, 0737, 0854	ASTM A220 grade 90001, ASTM A602 grade M8501	F26230, 20005	K 4
4.1		3.7024LN	Ti99,8	TA1 to 9	Ti99,8	ASTM B265 grade 1	R50250	S 1
4.2		3.7164LN, 3.7119LN	TiAl6V4, TiAl55n2	TA10 to 14, TA17	TiAl6V4, TiAl5Sn2	AMS4928	R54790	S 2
4.3		3.7164LN, 3.7174LN, 3.7184LN	TiAl6V4, TiAl6V5Sn2, TiAl4MoSn2	TA10 to 13, TA28	TiAl6V5Sn2	AMS4928, AMS4971	R56400, R54790	S 3
5.1		2.4060, 2.4066	Nickel 200, 270, Ni99,6	NA 11, NA12	Ni200, Ni270	Nickel 200, Nickel 230	N02200, N02230	S 1
5.2		2.4630LN, 2.4602, 2.4650LN	Nimonic 75, Monel 400, Hastelloy C, Inconel 600	HR203, 3027-76		Nimonic 75,Monel400, Hastelloy, Inconel600	N06075, N10002, N04400, N06600	S 2
5.3		2.4668LN, 2.4631LN, 2.6554LN	Inconel 718, Nimonic 80A, Waspaloy	HR8, HR401, 601		Inconel 718, 625, Nimonic 80	N07718, N07080, N06625	S 3
6.1	EN 1652 – CW004A	2.0060, 2.0070	E-Cu57, SE-Cu	C101	5010	101	C10100, C1020	N 3
6.2	EN 1652 – CW612N	2.0380, 2.0360, 2.1030, 2.1080	CuZn39Pb2, CuZn40, CuSn8, CuSn6Zn	CZ120, CZ109,PB104	5168		C28000, C37710	N 4
6.3	EN 1652 – CW508L	2.0321, 2.0260	CuZn37, CuZn28	CZ108,CZ106	5150		C2600, C27200	N 3
6.4			Ampco 18, Ampco 25	AB1 type	5238, JM7-20			N 4
7.1	EN 485-2 – EN AW-1070A	3.0255	Al99,5	LMO, 1 B (1050A)	4005	EC, 1060, 1100	A91060, A91100	N 1
7.2	EN 755-2 – EN AW-5005	3.1355, 3.3525	AlCuMg2, AlMg2Mn0,8	LM5, 10, 12, N4 (5251)	4106, 4212	380, 520.0, 520.2, 2024, 6061	A03800, A05200, A92024	N 1
7.3	EN 1706 – EN AC-42000	3.2162.05, 3.2341.01	GD-AlSi8Cu, G-AlSi5Mg	LM2,4,16,18,21,22,, 24,25,26,27,L109	4244	319.0, 333.0, 319.1, 356.0	A03190, A03330, C35600	N 1
7.4	SS-EN 1706 – EN AC-47000	3.2581.01	G-AlSi18, G-AlSi12	LM6, 12,13, 20, 28, 29, 30	4260, 4261, 4262	4032, 222.1, A332.0	A94032, A02220, A13320	N 2
8.1				Polystyrene, Nylon, PVC Cellulose, Acetate & Nitrate		Polystyrene, Nylon, PVC		O
8.2				Ebonite, Tufnol, Bakelite		Bakelite		O
8.3				Kevlar, Printed Circuit boards		Kevlar		O
9,1				Ferrotic, Ferrotitanit				H
10.1				Graphite				O

Tabela de Velocidade de Corte

DORMER

Vc																	
m/Min		5	8	10	15	20	25	30	40	50	60	70	80	90	100	110	150
Feet/Min		16	26	32	50	66	82	98	130	165	197	230	262	296	330	362	495
Ø		RPM															
mm	inch																
1,00		1592	2546	3183	4775	6366	7958	9549	12732	15916	19099	22282	25465	28648	31831	35014	47747
1,50		1061	1698	2122	3183	4244	5305	6366	8488	10610	12732	14854	16977	19099	21221	23343	31831
2,00		796	1273	1592	2387	3183	3979	4775	6366	7958	9549	11141	12732	14324	15916	17507	23873
2,50		637	1019	1273	1910	2546	3183	3820	5093	6366	7639	8913	10186	11459	12732	14006	19099
3,00		531	849	1061	1592	2122	2653	3183	4244	5305	6366	7427	8488	9549	10610	11671	15916
3,18	1/8	500	801	1001	1501	2002	2502	3003	4004	5005	6006	7007	8008	9009	10010	11011	15015
3,50		455	728	909	1364	1819	2274	2728	3638	4547	5457	6366	7276	8185	9095	10004	13642
4,00		398	637	796	1194	1592	1989	2387	3183	3979	4775	5570	6366	7162	7958	8754	11937
4,50		354	566	707	1061	1415	1768	2122	2829	3537	4244	4951	5659	6366	7074	7781	10610
4,76	3/16	334	535	669	1003	1337	1672	2006	2675	3344	4012	4681	5350	6018	6687	7356	10031
5,00		318	509	637	955	1273	1592	1910	2546	3183	3820	4456	5093	5730	6366	7003	9549
6,00		265	424	531	796	1061	1326	1592	2122	2653	3183	3714	4244	4775	5305	5836	7958
6,35	1/4	251	401	501	752	1003	1253	1504	2005	2506	3008	3509	4010	4511	5013	5514	7519
7,00		227	364	455	682	909	1137	1364	1819	2274	2728	3183	3638	4093	4547	5002	6821
7,94	5/16	200	321	401	601	802	1002	1203	1604	2004	2405	2806	3207	3608	4009	4410	6013
8,00		199	318	398	597	796	995	1194	1592	1989	2387	2785	3183	3581	3979	4377	5968
9,00		177	283	354	531	707	884	1061	1415	1768	2122	2476	2829	3183	3537	3890	5305
9,53	3/8	167	267	334	501	668	835	1002	1336	1670	2004	2338	2672	3006	3340	3674	5010
10,00		159	255	318	477	637	796	955	1273	1592	1910	2228	2546	2865	3183	3501	4775
11,11	7/16	143	229	287	430	573	716	860	1146	1433	1719	2006	2292	2579	2865	3152	4298
12,00		133	212	265	398	531	663	796	1061	1326	1592	1857	2122	2387	2653	2918	3979
12,70	1/2	125	201	251	376	501	627	752	1003	1253	1504	1754	2005	2256	2506	2757	3760
14,00		114	182	227	341	455	568	682	909	1137	1364	1592	1819	2046	2274	2501	3410
14,29	9/16	111	178	223	334	446	557	668	891	1114	1337	1559	1782	2005	2228	2450	3341
15,00		106	170	212	318	424	531	637	849	1061	1273	1485	1698	1910	2122	2334	3183
15,88	5/8	100	160	200	301	401	501	601	802	1002	1203	1403	1604	1804	2004	2205	3007
16,00		99	159	199	298	398	497	597	796	995	1194	1393	1592	1790	1989	2188	2984
17,46	11/16	91	146	182	273	365	456	547	729	912	1094	1276	1458	1641	1823	2005	2735
18,00		88	141	177	265	354	442	531	707	884	1061	1238	1415	1592	1768	1945	2653
19,05	3/4	84	134	167	251	334	418	501	668	835	1003	1170	1337	1504	1671	1838	2506
20,00		80	127	159	239	318	398	477	637	796	955	1114	1273	1432	1592	1751	2387
24,00		66	106	133	199	265	332	398	531	663	796	928	1061	1194	1326	1459	1989
25,00		64	102	127	191	255	318	382	509	637	764	891	1019	1146	1273	1401	1910
27,00		59	94	118	177	236	295	354	472	589	707	825	943	1061	1179	1297	1768
30,00		53	85	106	159	212	265	318	424	531	637	743	849	955	1061	1167	1592
32,00		50	80	99	149	199	249	298	398	497	597	696	796	895	995	1094	1492
36,00		44	71	88	133	177	221	265	354	442	531	619	707	796	884	973	1326
40,00		40	64	80	119	159	199	239	318	398	477	557	637	716	796	875	1194
50,00		32	51	64	95	127	159	191	255	318	382	446	509	573	637	700	955

Dureza / Resistência à tração

HV	HRC	HB		
Vickers	Rockwell	Brinell	N/ mm^2	Tons/ sq. in.
940	68			
900	67			
864	66			
829	65			
800	64			
773	63			
745	62			
720	61			
698	60			
675	59			
655	58		2200	142
650		618	2180	141
640		608	2145	139
639	57	607	2140	138
630		599	2105	136
620		589	2070	134
615	56	584	2050	133
610		580	2030	131
600		570	1995	129
596	55	567	1980	128
590		561	1955	126
580		551	1920	124
578	54	549	1910	124
570		542	1880	122
560	53	532	1845	119
550		523	1810	117
544	52	517	1790	116
540		513	1775	115
530		504	1740	113
527	51	501	1730	112
520		494	1700	110
514	50	488	1680	109
510		485	1665	108
500		475	1630	105
497	49	472	1620	105
490		466	1595	103
484	48	460	1570	102
480		456	1555	101
473	47	449	1530	99
470		447	1520	98
460		437	1485	96
458	46	435	1480	96
450		428	1455	94
446	45	424	1440	93
440		418	1420	92

HV	HRC	HB		
Vickers	Rockwell	Brinell	N/ mm^2	Tons/ sq. in.
434	44	413	1400	91
423	43	402	1360	88
413	42	393	1330	86
403	41	383	1300	84
392	40	372	1260	82
382	39	363	1230	80
373	38	354	1200	78
364	37	346	1170	76
355	36	337	1140	74
350		333	1125	73
345	35	328	1110	72
340		323	1095	71
336	34	319	1080	70
330		314	1060	69
327	33	311	1050	68
320		304	1030	67
317	32	301	1020	66
310	31	295	995	64
302	30	287	970	63
300		285	965	62
295		280	950	61
293	29	278	940	61
290		276	930	60
287	28	273	920	60
285		271	915	59
280	27	266	900	58
275		261	880	57
272	26	258	870	56
270		257	865	56
268	25	255	860	56
265		252	850	55
260	24	247	835	54
255	23	242	820	53
250	22	238	800	52
245		233	785	51
243	21	231	780	50
240		228	770	50
235		223	755	49
230		219	740	48
225		214	720	47
220		209	705	46
215		204	690	45
210		199	675	44
205		195	660	43
200		190	640	41

TOLERÂNCIA

	Ø mm							
	> 1 ≤ 3	> 3 ≤ 6	> 6 ≤ 10	> 10 ≤ 18	> 18 ≤ 30	> 30 ≤ 50	> 50 ≤ 80	> 80 ≤ 120
Tol	µm							
e8	-14 / -28	-20 / -38	-25 / -47	-32 / -59	-40 / -73	-50 / -89	-60 / -106	-72 / -126
f6	-6 / -12	-10 / -18	-13 / -22	-16 / -27	-20 / -33	-25 / -41	-30 / -49	- 36 / -58
f7	-6 / -16	-10 / -22	-13 / -28	-16 / -34	-20 / -41	-25 / -50	-30 / -60	-36 / -71
h6	0 / -6	0 / -8	0 / -9	0 / -11	0 / -13	0 / -16	0 / -19	0 / -22
h7	0 / -10	0 / -12	0 / -15	0 / -18	0 / -21	0 / -25	0 / -30	0 / -35
h8	0 / -14	0 / -18	0 / -22	0 / -27	0 / -33	0 / -39	0 / -46	0 / -54
h9	0 / -25	0 / -30	0 / -36	0 / -43	0 / -52	0 / -62	0 / -74	0 / -87
h10	0 / -40	0 / -48	0 / -58	0 / -70	0 / -84	0 / -100	0 / -120	0 / -140
h11	0 / -60	0 / -75	0 / -90	0 / -110	0 / -130	0 / -160	0 / -190	0 / -220
h12	0 / -100	0 / -120	0 / -150	0 / -180	0 / -210	0 / -250	0 / -300	0 / -350
k10	+40 / 0	+48 / 0	+58 / 0	+70 / 0	+84 / 0	+100 / 0	+120 / 0	+140 / 0
k12	+100 / 0	+120 / 0	+150 / 0	+180 / 0	+210 / 0	+250 / 0	+300 / 0	+350 / 0
m7	+2 / +12	+4 / +16	+6 / +21	+7 / +25	+8 / +29	+9 / +34	+11 / +41	+13 / +48
js14	+/- 125	+/- 150	+/- 180	+/- 215	+/- 260	+/- 310	+/- 370	+/- 435
js16	+/- 300	+/- 375	+/- 450	+/- 550	+/- 650	+/- 800	+/- 950	+/- 1100
H7	+10 / 0	+12 / 0	+15 / 0	+18 / 0	+21 / 0	+25 / 0	+30 / 0	+35 / 0
H8	+14 / 0	+18 / 0	+22 / 0	+27 / 0	+ 33 / 0	+39 / 0	+46 / 0	+54 / 0
H9	+25 / 0	+30 / 0	+36 / 0	+43 / 0	+52 / 0	+62 / 0	+74 / 0	+87 / 0
H12	+100 / 0	+120 / 0	+150 / 0	+180 / 0	+210 / 0	+250 / 0	+300 / 0	+ 350/ 0
P9	-6 / -31	-12 / -42	-15 / -51	-18 / -61	-22 / -74	-26 / -86	-32 / -106	-37 / -124

1µm = 0.001 mm

FURAÇÃO

DICAS GERAIS PARA FURAÇÃO

1. Selecione a broca mais adequada para a aplicação, considerando o material a ser usinado, a capacidade da máquina ferramenta e o fluido refrigerante a ser usado
2. A flexibilidade entre a peça e o fuso da máquina pode provocar danos na broca, na peça e na máquina – garanta sempre a estabilidade máxima. Isto pode ser melhorado selecionando a broca mais curta possível para a aplicação.
3. A fixação da ferramenta é um fator importante na operação de furação e não se deve permitir o escorregamento ou o movimento da broca no mandril.
4. Recomenda-se o uso de fluidos refrigerantes e lubrificantes adequados conforme exigido pela operação de furação específica. Quando utilizar fluidos e lubrificantes, assegure um abastecimento farto, especialmente na ponta da broca.
5. É essencial a evacuação dos cavacos durante a furação para garantir o procedimento correto de furação. Jamais permita que os cavacos permaneçam estacionários nos canais.
6. Ao reafiar uma broca, verifique sempre que seja produzida a correta geometria da ponta e que qualquer desgaste tenha sido removido.

DIMENSÃO DO FURO

Na medida em que as config rações geométricas de substrato e de cobertura avançam, aumenta-se a capacidade da broca para produzir dimensões de furos mais exatas. Em geral, uma ferramenta com geometria standard produzirá um furo com tolerância H12. Porém, conforme a configur ção da broca torna-se mais complexa, a dimensão atingível, sob condições favoráveis, poderá ser com uma tolerância tão boa como a H8. Para uma melhor visualização, seguem abaixo os tipos de produto e as tolerâncias atingíveis na furação:

- Brocas HSS para utilização geral – H12
- Brocas HSS / HSS-E de canais parabólicos para furos profundos – H10
- De Metal Duro de Alto Desempenho com cobertura - H8/H9

ESTRATÉGIA PARA FURAÇÃO PROFUNDA

Para furação profunda, têm sido adotados diversos métodos para atingir a profundidade exigida. O exemplo abaixo mostra quatro modos de executar um furo com 10 x o diâmetro da broca.

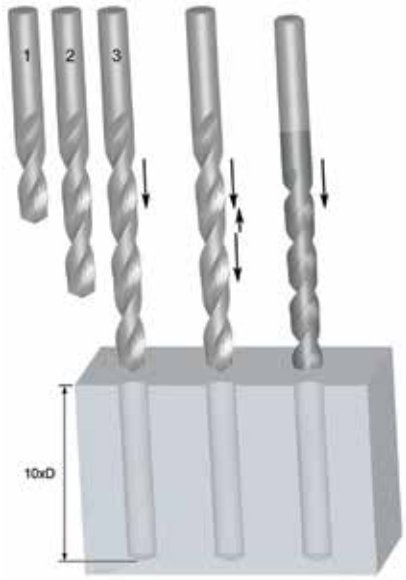

	Furação em Série	Furação em Série
No. de brocas	3 (2,5xD, 6xD,10xD)	2 (2,5xD,10xD)
Tipo de broca	Geometria Standard, uso geral	Geometria Standard, uso geral
+ / -	Cara Consome muito tempo	Maior custo-benefício Rápido

	Furação Intermitente	Furação num só Passo
No. de brocas	1 (10xD)	1 (10xD)
Tipo de broca	Geometria Standard, uso geral	Ferramentas para usos específico
+ / -	Consome muito tempo	Custo-benefício Rápido

SOLUÇÃO DE PROBLEMAS NA FURAÇÃO

PROBLEMA	CAUSA	SOLUÇÃO
Lingüeta de extração quebrada ou dobrada	Encaixe ruim entre a haste e o soquete	Verificar que a haste e o soquete estejam limpas e livres de danos
Trinca no núcleo	Avanço exagerado	Reduzir o avanço para a taxa ideal
	Folga inicial insuficient	Reafiar para especificação corre
	Adelgaçamento excessivo do núcleo	Reafiar para especificação corre
	Impacto excessivo na ponta da broca	Evitar impactos na ponta da broca. Cuidado com as brocas de haste cônica durante a inserção/ ejeção no fuso
Guias externas gastas	Velocidade excessiva	Reduzir velocidade ao ideal – poderá ser possível aumentar o avanço
Guias externas quebradas	Montagem instável da peça	Reduzir movimento na peça
Aresta de corte lascada	Folga inicial excessiva	Reafiar para especificação corre
Quebra na descarga do canal	Canais engasgados	Adotar um conceito de furação intermitente/ em série
	Escorregamento da broca	Verifique que a broca esteja presa firmemente n mandril e no fuso
Furo com acabamento em espiral	Avanço insuficient	Aumentar avanço
	Precisão deficiente da posiçã	Utilizar uma broca guia antes da furação
Dimensão do furo grande demais	Geometria da ponta incorreta	Verificar a geometria da pont
	Liberação ineficiente dos cavaco	Ajustar velocidade, avanço e comprimento do curso para obter um cavaco melhor administrado

ALARGADORES

DICAS GERAIS PARA O USO DE ALARGADORES

Para se obter os melhores resultados na utilização de alargadores é essencial fazer com que “funcionem”. É uma falha comum a de preparar furos para alargamento com pouco material de sobra. Se no furo for deixado material insuficiente antes do alargamento, o alargador irá derrapar, apresentando desgaste rapidamente e isso resultará numa perda de diâmetro. É igualmente importante para o serviço não deixar excesso de material no furo.(Ver Remoção de Material abaixo).

1. Selecione o tipo ideal de alargador e as velocidades e avanços ideais para a aplicação.Certifique-se de que os furos previamente feitos tenham o diâmetro correto.

2. A peça de trabalho deve ser montada rigidamente e o fuso da máquina não deverá ter jogo.

3. O mandril que suporta um alargador com haste paralela deverá ser de boa qualidade.Se o alargador escorregar no mandril e o avanço for automático, poderá ocorrer a quebra do alargador.

4. Mantenha a projeção da ferramenta com relação ao fuso da máquina num mínimo.

5. Utilizar lubrificantes recomendados para melhorar a vida útil do alargador e para garantir que o fluido chegue até as arestas de corte. Como o alargamento não é uma operação de corte pesada, uma solução de óleo em proporção de 40:1 é satisfatória normalmente. No caso de ferro fundido cinzento, poderá ser utilizado jato de ar, se a usinagem for a seco.

6. Não permita que os canais de um alargador fiquem bloqueados com cavacos

7. Antes de reafiar o alargador, verificar a concentricidade entre pontas. Na maioria dos casos será necessário afiar somente os chanfros de entrada.

8. Mantenha afiados os alargadores. A reafiação frequente é uma boa economia, porém é importante compreender que os alargadores cortam somente nos chanfros de entrada e cônicos e não nos campos. Em conseqüência, somente estes chanfros de guia necessitam reafiação. A precisão da reafiação é importante para a qualidade dos furos e a vida útil da ferramenta.

REMOÇÃO DE MATERIAL

A remoção recomendada de material no alargamento depende do material da aplicação e do acabamento da superfície do furo previamente executado. As linhas gerais para remoção de material são mostradas nas tabelas que seguem:

Dimensão do furo alargado (mm)	Quando há pré-furo	Quando há pré-furo no centro
Abaixo de 4	0.1	0.1
Acima de 4 a 11	0.2	0.15
Acima de 11 a 39	0.3	0.2
Acima de 39 a 50	0.4	0.3

Dimensão do furo alargado (polegadas)	Quando há pré-furo	Quando há pré-furo no centro
Abaixo de 3/16	0.004	0.004
3/16 to ½	0.008	0.006
½ to 1.½	0.010	0.008
1.½ to 2	0.016	0.010

LIMITES DE TOLERÂNCIA

1. OS DIÂMETROS DE CORTE DOS ALARGADORES STANDARD
   O diâmetro (d1) é medido através do campo circular imediatamente atrás da guia cônica. A tolerância é conforme DIN 1420 e deve produzir furos H7.

TOLERÂNCIAS DOS ALARGADORES			
Diâmetro (mm)		Limites de Tolerância (mm)	
Acima de	Até e incluindo	Alto +	Baixo +
	3	0.008	0.004
3	6	0.010	0.005
6	10	0.012	0.006
10	18	0.015	0.008

TOLERÂNCIAS DOS ALARGADORES			
Diâmetro (mm)		Limites de Tolerância (mm)	
Acima de	Até e incluindo	Alto +	Baixo +
18	30	0.017	0.009
30	50	0.021	0.012
50	80	0.025	0.014

2. OS FUROS H7
   A tolerância mais frequente num furo acabado é H7 (ver tabela abaixo). Para quaisquer outras tolerâncias a figura e tabela abaixo do item 3 podem ser utilizadas para calcular a localização e largura da tolerância dos alargadores.

TOLERÂNCIAS DOS FUROS			
Diâmetro (mm)		Limites de Tolerância (mm)	
Acima de	Até e incluindo	Alto +	Baixo +
	3	0.010	0
3	6	0.012	0
6	10	0.015	0
10	18	0.018	0

TOLERÂNCIAS DOS FUROS			
Diâmetro (mm)		Limites de Tolerância (mm)	
Acima de	Até e incluindo	Alto +	Baixo +
18	30	0.021	0
30	50	0.025	0
50	80	0.030	0

3. Quando for necessário definir as dimensões de um alargador especial destinado a cortar para uma tolerância específica, ex. D8, pode ser utilizado este guia

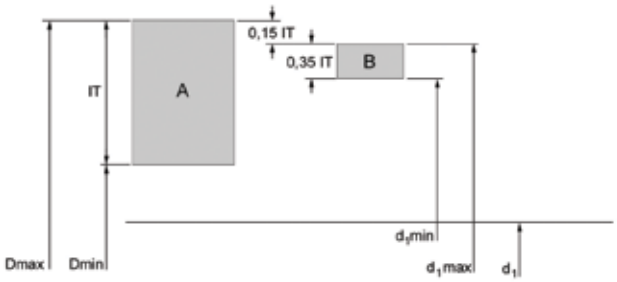

A = Tolerâncias dos Furos
B = Tolerâncias dos Alargadores
IT = Tolerância do furo
Dmax = Diâmetro Máx do Furo
Dmin = Diâmetro Mín do Furo
d_1 = Diâmetro Nominal
$d_1$max = Diâmetro Máx do Alargador
$d_1$min = Diâmetro Mín do Alargador

	Dimensão da Tolerância no Diâmetro (mm)							
Dimensão da Tolerância (µ)	de 1 a 3	acima de 3 até 6	acima de 6 até 10	acima de 10 até 18	acima de 18 até 30	acima de 30 até 50	acima de 50 até 80	acima de 80 até 120
IT5	4	5	6	8	9	11	13	15
IT6	6	8	9	11	13	16	19	22
IT7	10	12	15	18	21	25	30	35
IT8	14	18	22	27	33	39	46	54
IT9	25	30	36	43	52	62	74	87
IT10	40	48	58	70	84	100	120	140
IT11	60	75	90	110	130	160	190	220
IT12	100	120	150	180	210	250	300	350

ex. furo de10mm com tolerância D8, Max diâmetro = 10,062, Min diâmetro = 10,040, Tolerância do furo (IT8) = 0,022

Limite máximo: 0,15 x tolerância do furo (IT8) = 0,0033, arredondado = 0,004
Limite mínimo: 0,35 x tolerância do furo (IT8) = 0,0077, arredondado = 0,008

Limite máximo para alargador = 10,062 - 0,004 = 10,058
Limite mínimo para alargador = 10,058 - 0,008 = 10,050

SOLUÇÃO DE PROBLEMAS NO ALARGAMENTO

PROBLEMA	CAUSA	SOLUÇÃO
Lingüetas de extração quebradas ou deformadas	Ajuste incorreto entre haste e bucha	Verificar que a haste e a bucha estejam limpas e sem danos
Desgaste Rápido da Ferramenta	Material insuficiente a ser removid	Aumentar a quantidade de material a ser removido
Furo além da medida	Variação de altura das arestas de corte	Reafiar conforme especificação corre
	Deslocamento no fuso da máquina	Consertar e retificar deslocamento do fus
	Defeitos no porta-ferramenta	Substituir o porta-ferramenta
	Haste da ferramenta danificad	Substituir ou retificar a ferrament
	Ângulo da aresta guia assimétrico	Substitua ou rafie a ferrament
	Ângulo da aresta guia assimétrico	Reafiar conforme especificação corre
	Avanço ou velocidade de corte elevados demais	Ajustar as condições de corte conforme o Catálogo
Furo menor que a medida	Material insuficiente a ser removid	Aumentar a quantidade de material a ser removido
	Excesso de calor gerado no alargamento. O furo dilata-se e se contrai	Aumentar o fluxo do fluido refrigeran
	O diâmetro da ferramenta está desgastado e abaixo da dimensão	Reafiar conforme especificação corre
	Avanço ou velocidade de corte baixos demais	Ajustar as condições de corte conforme o Catálogo
	Pré-furo é pequeno demais	Diminuir a quantidade de material a ser removido
Furos ovais e cônicos	Deslocamento no fuso da máquina	Consertar e retificar deslocamento do fus
	Desalinhamento entre ferramenta e furo	Usar um alargador “ponte”
	Ângulo da aresta guia assimétrico	Reafiar conforme especificação corre
Acabamento ruim do furo	Material excessivo a ser removido	Diminuir a quantidade de material a ser removido
	Ferramenta gasta	Reafiar conforme especificação corre
	Ângulo de corte pequeno demais	Reafiar conforme especificação corre
	Emulsão ou óleo de corte diluídos demais	Aumentar % de concentração
	Avanço e /ou velocidade baixos demais	Ajustar as condições de corte conforme o Catálogo
	Velocidade de corte alta demais	Ajustar as condições de corte conforme o Catálogo
A ferramenta se prende e quebra	Ferramenta gasta	Reafiar conforme especificação corre
	Conicidade traseira da ferramenta é pequena demais	Verificar e substituir/modificar a ferramen
	A largura da guia é exagerada	Verificar e substituir/modificar a ferramen
	O material da peça de trabalho tende a prender	Utilizar um alargador regulável para compensar o deslocamento
	Pré-furo é pequeno demais	Diminuir a quantidade de material a ser removido
	Material heterogêneo com inclusões duras	Utilizar alargador de metal duro

FRESAMENTO DE ROSCAS

CONSIDERAÇÕES GERAIS SOBRE O FRESAMENTO DE ROSCAS

1. O fresamento de rosca é o processo de geração de uma rosca pela interpolação circular de uma fresa com uma geometria de rosca específica em torno da periferia do furo
2. Para conseguir usar uma fresa interpoladora de rosca, é necessário ter uma máquina CNC capaz de traçar caminhos circulares.
3. A maioria das máquinas CNC modernas são equipadas com ciclos de usinagem para fresamento de roscas
4. Consulte o manual ou entre em contato com o fornecedor da máquina para obter informações

RECURSOS E BENEFÍCIOS

1. O fresamento de roscas proporciona maior confiabilidade e vida útil da ferrament
2. As fresas interpoladoras de rosca produzem pequenas lascas resultando em um rosqueamento sem problemas
3. Os ajustes de tolerância podem ser feitos através das coordenadas exatas
4. É possível gerar uma rosca mais completa na parte inferior do buraco
5. Capaz de usinar uma grande variedade de materiais
6. A mesma fresa pode produzir roscas de diferentes tamanhos, desde que a inclinação seja a mesma
7. As roscas direita e esquerda podem ser criadas com a mesma ferramenta
8. Algumas fresas também podem usar o chanfro de entrada (J200, J205, J260)

ESCOLHENDO SUA FERRAMENTA

As fresas de interpolar roscas possuem um código de item com base no tipo, diâmetro (d1) e inclinação (P)

O código do item é o número usado para solicitar sua ferramenta

Consulte sempre o catálogo para garantir que você tenha as dimensões corretas da rosca

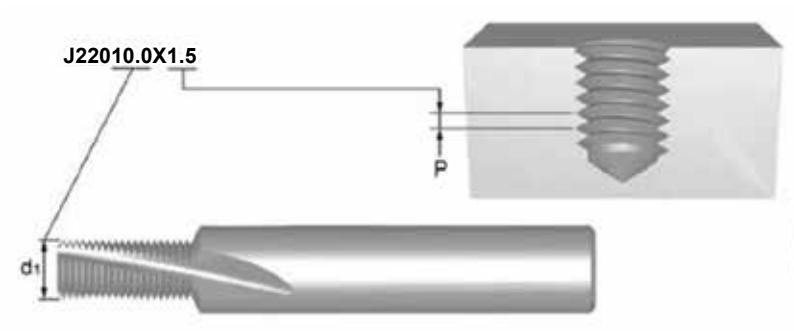

Esta fresa interpoladora de rosca pode ser usada para roscas ≥ M12 x 1,5 (M14 x 1,5, M18 x 1,5 etc)

PROGRAMAÇÃO COM Rprg

- Para um fácil ajuste da tolerância da rosca, faça a programação sempre com correção de raio
- O valor Rprg é o valor inicial para uma nova fresa, impresso na haste. Ele deve ser inserido no deslocamento da memória da ferramenta
- O Rprg baseia-se na linha zero teórica da rosca, o que significa que, ao fazer a programação usando o Rprg, a rosca nunca ficará com tamanho excessivo, e sim, normalmente apertad
- Isso significa que, com uma pequena modificação nas coordenadas do programa, é possível criar a rosca para tamanho desejado

RECOMENDAÇÕES

- Use sempre os dados de corte corretos (consulte o gráfico de dados de corte na página 198
- Use o tamanho de broca recomendado de acordo com o diâmetro da rosca, assim como para os machos convencionais
- Para um ajuste fácil da tolerância da rosca, comece sempre com o valor Rprg impresso na haste da fresadora
- Use um medidor para verificar a tolerância na primeira rosca e estabelecer se o raio precisa ser corrigido. O raio pode ser corrigido 2 ou 3 vezes antes da fresadora se desgastar
- Durante a usinagem seca, recomenda-se ar comprimido para ajudar na remoção do material
- Ao rosquear materiais mais difíceis, recomendamos 2 ou 3 passagens

ROSQUEAMENTO

Dicas Gerais Sobre Rosqueamento

O sucesso de qualquer operação de rosqueamento depende de diversos fatores, todos afetam a qualidade do produto acabado.

1. Selecione a geometria correta do macho para o material da peça e e o tipo do furo, por exemplo, passante ou cego, através da tabela de Classificação de Materiais
2. Verifique que o componente esteja firmemente fixado – o movimento lateral poderá causar a quebra do macho ou roscas de baixa qualidade.
3. Selecione a dimensão correta da broca conforme a página correspondente do catálogo. Cuide sempre para que seja mantido no mínimo o endurecimento superficial da peça
4. Selecione a velocidade de corte correta conforme mostrada no catálogo.
5. Utilize o fluido de corte adequado para uma correta aplicação
6. Nas aplicações NC (Controle Numérico) verifique se o valor do avanço escolhido para o programa está correto. Quando for utilizado um dispositivo para rosquear, recomenda-se de 95% a 97% do passo para permitir que o macho produza seu próprio passo.
7. Quando possível, fixe o macho num dispositivo de rosqueamento de boa qualidade com limitação do torque, que assegure o movimento axial livre do macho e que o apresente corretamente com relação ao furo. Isto também protegerá o macho de uma quebra se atingir acidentalmente o fundo de um furo cego.
8. Controle a entrada suave do macho no furo, pois um avanço desigual poderá causar um alargamento da rosca.

TABELA DE TOLERÂNCIAS DE MACHOS VS TOLERÂNCIAS DE ROSCAS INTERNAS (PORCAS)

Classe de Tolerância, macho			**Tolerância de Rosca Interna (porca)**					**Aplicação**
ISO	DIN	ANSI BS						
ISO 1	4 H	3 B	4 H	5 H				Ajuste sem folga
ISO 2	6 H	2 B	4 G	5 G	6 H			Ajuste Normal
ISO 3	6 G	1 B			6 G	7 H	8 H	Ajuste com folga grande
-	7 G	-				7 G	8 G	Ajuste solto para tratamento ou revestimento a seguir

SOLUçã O DE PROBLEMAS NO ROSQUEAMENTO

PROBLEMA	CAUSA	SOLUÇÃO
Super-Dimensão	Tolerância Incorreta	Escolher um macho com tolerância de rosca mais baixa.
	Taxa de avanço axial incorreta	Reduzir a taxa de avanço em 5-10% ou aumentar a pressão no porta-macho.
	Tipo errado de macho para a aplicação	Utilizar ponta helicoidal para furo passante ou canal helicoidal para furo cego. Utilizar ferramenta revestida para evitar as arestas postiças. Verificar Catálogo ou Selector para alternativa correta de ferramenta.
	Macho não centralizado no furo	Verificar o porta-macho e posicionar o centro do macho no furo.
	Falta de lubrificaçã	Utilizar uma boa lubrificação a fim de evitar a formação d aresta postiça. Ver Seção de Lubrificante no manual técnico Dormer
	Velocidade do macho baixa demais	Seguir as recomendações no Catálogo / Selector.
Infra-Dimensão	Tipo errado de macho para a aplicação	Utilizar ponta helicoidal para furo passante ou canal helicoidal para furo cego. Utilizar ferramenta com cobertura para evitar as arestas postiças. Utilizar macho com ângulo de incidência maior. Verificar Catálogo ou Selector para alternativa correta de ferramenta.
	Tolerância incorreta	Escolher um macho com tolerância mais elevada, especialmente em materiais com baixa tendência a super-dimensão, tais como ferro fundido, aço inoxidável.
	Lubrificante incorreto ou falta do mesmo	Utilizar uma boa lubrificação a fim de evitar o bloqueio do cavacos dentro do furo. Ver Seção de Lubrificante no manual técnico Dormer
	Furo pequeno demais para o macho	Aumentar o diâmetro da broca para o valor máximo. Verifique a medida da broca para o rosqueamento
	O material “fecha-se” após o rosqueamento	Ver recomendações no Catálogo / Selector para alternativa correta de ferramenta.
Escamação	Tipo errado de macho para a aplicação	Escolher um macho com menor ângulo de incidência. Escolher um macho com chanfro mais longo. Utilizar machos com ponta helicoidal para furo passante e canais helicoidal para furos cegos, a fim de evitar bloqueio dos cavacos. erificar Catálogo ou Selector para alternativa correta de ferramenta.
	Lubrificação incorreta ou falta da mesma	Utilizar boa lubrificação a fim de evitar aresta postiça. er Seção Lubrificante no manual técnico Dormer
	Os machos batem no fundo do furo	Aumentar profundidade de furação ou diminuir profundidade de rosqueamento.
	Superfície endurecida pelo trabalho	Reduzir velocidade, utilizar ferramenta com cobertura, utilizar boa lubrificação. er Seção para usinagem de aços inoxidáveis no manual técnico Dormer
	Cavacos presos na reversão	Evitar retorno repentino do macho no movimento de reversão.
	O chanfro bate na entrada do furo	Verificar posição axial e reduzir o erro axial da ponta do macho no centro do furo.
	Furo pequeno demais para o macho	Aumentar o diâmetro da broca até o valor máximo. Verifique a medida da broca para o rosqueamento

SOLUçã O DE PROBLEMAS NO ROSQUEAMENTO

PROBLEMA	CAUSA	SOLUÇÃO
Quebra do macho	Macho desgastado	Usar um macho novo ou reafiar o que está usando
	Falta de lubrificant	Utilizar uma boa lubrificação a fim de evitar aresta postiça bloqueio de cavacos. Ver Seção Lubrificaçã no manual técnico Dormer
	O macho bate no fundo do furo	Aumentar a profundidade da furação ou diminuir a profundidade do rosqueamento.
	Velocidade do macho muito elevada	Reduzir a velocidade do macho. Seguir as recomendações de Catálogo/Selector.
	Superfície endurecida pelo trabalho	Reduzir velocidade. Utilizar ferramenta revestida. Utilizar boa lubrificação. er Seção para Usinagem de Aços Inoxidáveis no manual técnico Dormer
	Furo a ser rosqueado pequeno demais	Aumentar o diâmetro da broca até o valor máximo. Ver Tabelas de Brocas para Rosqueamento.
	Torque elevado demais	Utilizar dispositivo de rosqueamento com embreagem de reajuste do torque.
	O material se contrai após o rosqueamento	Ver recomendações no Catálogo/ Seletor de Produto para a alternativa correta da ferramenta.
Desgaste rápido	Tipo errado de macho para a aplicação	Utilizar macho com menor ângulo de incidência e maior alívio. Verificar Catálogo ou Selector para alternativa correta da ferramenta.
	Falta de lubrificant	Utilizar uma boa lubrificação a fim de evitar aresta postiça. er Seção Lubrificaçã no manual técnico Dormer
	Velocidade do macho alta demais	Reduzir velocidade de corte. Seguir recomendações no Catálogo/Selector.
Aresta postiça	Tipo errado de macho para a aplicação	Utilizar macho com menor ângulo de incidência e maior alívio. Verificar Catálogo ou Selector para alternativa correta da ferramenta.
	Falta de lubrificant	Utilizar uma boa lubrificação a fim de evitar aresta postiça. er Seção Lubrificaçã no manual técnico Dormer
	Tratamento da superfície não é adequado	Escolha o macho com o tratamento superficial recomendado para a aplicação
	Velocidade do macho baixa demais	Seguir recomendações do Catálogo/ Selector.

FRESAMENTO

DICAS GERAIS PARA FRESAMENTO

O fresamento é um processo de gerar superfícies usinadas pela remoção progressiva de uma quantidade pré-determinada de material da peça de trabalho a uma taxa de movimento ou avanço relativamente baixa mediante uma fresa que gira a uma velocidade comparativamente alta.
A característica principal do processo de fresamento é que cada aresta de corte da fresa remove a sua parcela do material na forma de cavacos individuais pequenos.

TIPOS DE FRESAS

As três operações básicas de fresamento são mostradas abaixo: (A) fresamento periférico, (B) fresamento facial e (C) fresamento de topo.

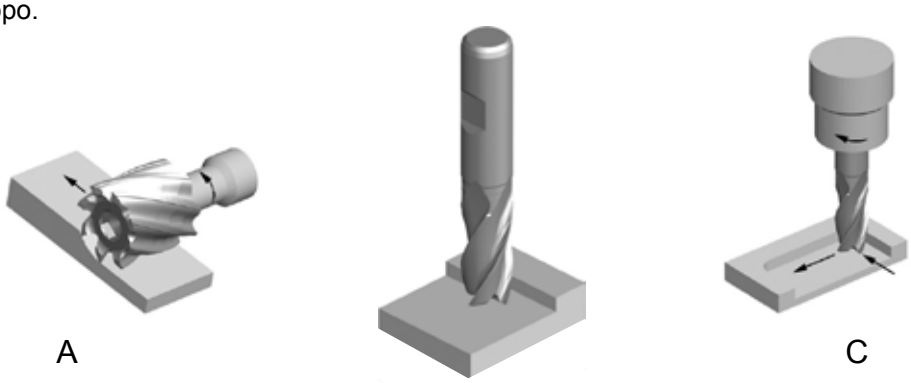

A B C

No fresamento periférico (também denominado fresamento de blocos), o eixo de rotação da fresa está paralelo à superfície da peça de trabalho a ser usinada. A fresa tem um número de facas na sua circunferência, cada uma atuando como uma ferramenta de corte individual para fresamento plano. As fresas utilizadas em fresamento periférico podem ter facas retas ou helicoidais gerando uma ação de corte ortogonal ou oblíqua.

No fresamento facial, a fresa está montada num fuso com uma rotação do eixo perpendicular à superfície da peça de trabalho. A superfície fresada resulta da ação de arestas de corte localizadas na periferia e na face da fresa.
No fresamento de topo, a fresa geralmente gira num eixo vertical com relação à peça de trabalho. Pode ser inclinada para usinar superfícies cônicas. As arestas cortantes estão localizadas tanto na face terminal da fresa quanto na periferia do corpo da fresa.

APLICAÇÕES

A MRR e as aplicações estão fortemente relacionadas. Para cada diferente aplicação temos um diferente MRR que aumenta com a área da fresa que age sobre a peça de trabalho. O Catálogo Dormer mais recente foi elaborado com ícones simples que mostram as diversas aplicações.

Fresamento lateral	Fresamento facial	Fres. de ranhuras	Fres. de mergulho	Fres. de rampas
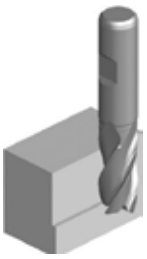		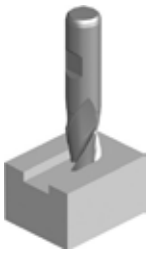	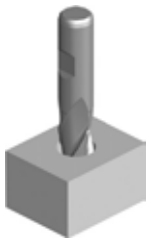	
A profundidade radial do corte deverá ser inferior a 0.25 do diâmetro da fresa de topo.	A profundidade radial do corte não deverá ser mais de 0.9 do diâmetro, a profundidade axial do corte menor que 0.1 do diâmetro.	Usinagem de um rasgo para chaveta. A profundidade radial do corte é igual ao diâmetro da fresa de topo.	Só é possível furar a peça de trabalho com uma fresa de topo com corte central. Nesta operação o avanço deverá ser dividido por 2.	Entradas tanto axial quanto radial na peça de trabalho.

SOLUÇÃO DE PROBLEMAS NO FRESAMENTO

PROBLEMA	CAUSA	SOLUÇÃO
Quebra	Remoção exagerada de material	Diminuir o avanço por faca
	Avanço elevado demais	Diminuir o avanço
Desgaste	Comprimento dos canais ou total grandes demais	Introduzir mais a haste no porta-ferramenta, utilizar fresa de topo mais curta
	Material da peça de trabalho duro demais	Verificar Catálogo ou Selector para ferramenta correta com material de classe mais elevada e/ou revestimento adequado
	Avanço e velocidade inadequados	Verificar Catálogo ou Selector para parâmetros de corte corretos
	Evacuação de cavacos deficiente	Reposicionar as linhas do refrigerante
	Fresamento convencional	Fresamento ascendente
	Hélice de corte inadequada	Ver recomendações no Catálogo/ Selector para alternativa correta de ferramenta
Escamação	Taxa de avanço elevada demais	Reduzir taxa de avanço
	Trepidação	Reduzir as RPM
	Baixa velocidade de corte	Aumentar as RPM
	Fresamento convencional	Fresamento ascendente
	Rigidez da ferramenta insuficient	Escolher uma ferramenta mais curta e/ou colocar a haste mais para dentro do porta ferramentas
	Rigidez insuficiente da peça de trabalho	Fixar firmemente a peça de trabalh
Vida útil curta da ferramenta	Material de trabalho tenaz	Verificar Catálogo ou Selector por alternativa correta da ferramenta
	Ângulo de corte e alívio primário inadequados	Mudar para ângulo de corte correto
	Atrito fresa/ peça de trabalho	Utilizar ferramenta revestida
Acabamento da superfície ruim	Avanço rápido demais	Diminuir para avanço correto
	Velocidade baixa demais	Aumentar a velocidade
	Cavacos mordidos	Diminuir a remoção de material
	Desgaste da ferramenta	Substituir ou reafiar a ferrament
	Acúmulo de cavacos	Mudar para ferramenta com hélice maior
	Cavacos falsos	Aumentar a quantidade do fluido refrigerant

PROBLEMA	CAUSA	SOLUÇÃO
Baixa precisão na peça de trabalho	Deflexão da ferrament	Escolher uma ferramenta mais curta e/ou colocar a haste mais para dentro do porta-ferramentas
	Número de canais insuficient	Usar uma ferramenta com mais canais
	Porta-ferramentas solto ou gasto	Consertar ou substituir o porta-ferramenta
	Baixa rigidez do porta-ferramenta	Substituir por porta-ferramenta mais curto/ rígido
	Rigidez deficiente do fus	Utilizar fuso maior
Trepidação	Avanço e velocidade elevados demais	Corrigir avanço e velocidade com o auxílio do Catálogo/ Selector
	Comprimento dos canais ou total grandes demais	Introduzir mais a haste no porta-ferramenta, usar fresa de topo mais curta
	Corte profundo demais	Diminuir profundidade do corte
	Não há rigidez suficiente (máquina e porta-ferramenta)	Verificar o porta-ferramenta e trocar se necessári

REBARBAS DE CARBONETO

CONSIDERAÇÕES GERAIS SOBRE AS REBARBAS DE CARBONETO

As rebarbas de carboneto são amplamente utilizadas no preparo e acabamento de componentes em uma ampla variedade de materiais.

Elas geralmente são usadas manualmente e montadas em esmerilhador pneumático

RECURSOS E BENEFÍCIOS

1. As hastes de aço reforçadas e endurecidas melhoram a rigidez e reduzem o risco de dobra ou vibração
2. As hastes moídas com precisão melhoram a manutenção e reduzem a probabilidade de giros
3. Elementos especiais de solda evitam falhas de alta temperatura e também proporcionam maior resistência para suportar pressão e impacto
4. A geometria universal Double Cut é adequada para uma ampla variedade de materiais e aplicações
5. As geometrias específicas do material também estão disponíveis para aço (ST), aço inoxidável (A), alumínio (AL) e fibra de vidro (GRP
6. Disponível com revestimento TiAlN para aumentar a vida útil da ferramenta em materiais abrasivos
7. As rebarbas de nariz esférico são trituradas com geometria Skip Flute
8. Isso fornece geometria ativa em direção ao centro da rebarba, melhorando a ação de corte e reduzindo as chances de acúmulo e obstrução causadas por limalhas

Pular

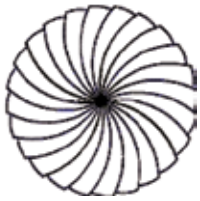

Normal

SEGURANÇA EM PRIMEIRO LUGAR

1. As ferramentas giratórias de alta velocidade são perigosas e podem ser nocivas caso sejam utilizadas de modo errado
2. Sempre desconecte o esmerilhador do suprimento de ar antes de tentar mudar as rebarbas
3. Verifique a condição do esmerilhador e, se possível, use versões de baixa vibraçã
4. Use sempre o equipamento de proteção apropriado e assegure-se de que alguém que trabalhe próximo também esteja protegido

O equipamento de proteção individual deve ser usado o tempo todo.

RECOMENDAÇÕES

1. Utilize sempre o esmerilhador com a velocidade adequada
2. A manutenção de rotina dos esmerilhadores é importante, assegure-se de estejam lubrificados e que os rolame - tos não estejam desgastados
3. Sempre limpe a porca de aperto, a bucha e o cônico interno do esmerilhador ao mudar uma rebarba
4. Tente evitar choque mecânico e forte impacto das rebarbas
5. Tente evitar o choque térmico não permitindo que a rebarba fique superaquecid
6. Não mergulhe a rebarba muito fundo no material da peça ou prenda a rebarba em cantos ou canais

Solução de problemas USANDO REBARBAS

PROBLEMA	CAUSA
Lascas dos dentes da rebarba	Rotações muito baixas podem provocar o salto
	Excentricidade (fuso, bucha ou rolamentos desgastados)
	Mergulho ou bloqueio da rebarba na peça de trabalho
Depósito de sujeira nos dentes da rebarba	Comprimento da flauta ou comprimento total longo demai
	Escolha de geometria incorreta para o material da peça
Desgaste prematuro	Rotações muito altas para o tamanho da rebarba e do material da peça
	Excentricidade (fuso, bucha ou rolamentos desgastados)
A cabeça desloca-se da haste	Rotações muito altas causando superaquecimento
	Operação por períodos prolongados causando superaquecimento

Español			Dureza	Resistencia a la tracción	
Aplicación por grupo de material			HB	N/mm²	ISO
1. Acero	1.1	Acero blando	< 120	< 400	P 1
	1.2	Acero de construcción/cementación	< 200	< 700	P 1
	1.3	Acero al carbono	< 250	< 850	P 2
	1.4	Acero aleado	< 250	< 850	P 3
	1.5	Acero aleado/temple y revenido	> 250 < 350	> 850 < 1200	P 4
	1.6	Acero aleado/temple y revenido	> 350	> 1200 < 1620	H 1
	1.7	Acero aleado cementado	49-55HRC	> 1620	H 3
	1.8	Acero aleado cementado	55-63HRC	> 1980	H 4
2. Acero inoxidable	2.1	Acero inoxidable fácil mecanizado	< 250	< 850	M 1
	2.2.	Austenítico	< 320	< 1100	M 3
	2.3	Ferritico, Ferr. + Aust., Marten	< 300	< 1000	M 2
	2.4	Acero Inoxidable Templado	>320 <410	>1100 <1400	S 2
3. Hierro Fundido	3.1	Con grafito laminar	< 150	> 500	K 1
	3.2	Con grafito laminar	> 150 <300	> 500 < 1000	K 2
	3.3	Con graf. laminar, fundic. maleable	< 200	< 700	K 3
	3.4	Con graf. laminar, fundic. maleable	> 200 < 300	> 700 < 1000	K 4
4. Titanio	4.1	Titanio no aleado	< 200	< 700	S 1
	4.2	Titanio aleado	< 270	< 900	S 2
	4.3	Titanio aleado	> 270 < 350	> 900 ≤ 1250	S 3
5. Nickel	5.1	Níquel no aleado	< 150	< 500	S 1
	5.2	Níquel aleado	< 270	> 900	S 2
	5.3	Níquel aleado	> 270 < 350	> 900 < 1200	S 3
6. Cobre	6.1	Cobre	< 100	< 350	N 3
	6.2	β-Latón, bronce	< 200	< 700	N 4
	6.3	α-Latón	< 200	< 700	N 3
	6.4	Metal AMPCO	< 470	< 1500	N 4
7. Aluminio Magnesio	7.1	Al, Mg, no aleado	< 100	< 350	N 1
	7.2	Al aleado con Si < 0.5%	< 150	< 500	N 1
	7.3	Al aleado con Si > 0.5% < 10%	< 120	< 400	N 1
	7.4	Al aleado, Si>10% Reforzado por filamentos Al-aleados, Mg-aleados	< 120	< 400	N 2
8. Materiales Sintéticos	8.1	Termoplásticos	---	---	O
	8.2	Plásticos endurecidos por calor	---	---	O
	8.3	Materiales plásticos reforzados	---	---	O
9. Materiales duros	9,1	Cerametales (metales-cerámicas)	< 550	< 1700	H
10. Grafito	10.1	Grafito standard	---	< 100	O

DORMER

EJEMPLOS DE MATERIALES DE LAS PIEZAS DE TRABAJO EN DIFERENTES NORMAS

AMG	EN	W Nr.	DIN	BS	SS	USA	UNS	ISO
1.1		1.1015, 1.1013	Rfe60, Rfe100	230Mo7, 050A12	1160	Leaded Steels	G12120	P 1
1.2	EN 10 025 – S235JRG2	1.1012, 1.1053, 1.7131	St37-2, 16MnCr5, St50-2	060A35, 080M40, 4360-50B	1312, 1412, 1914	135, 30	G10100	P 1
1.3	EN 10 025 – E295	1.1191, 1.0601	CK45, C60	080M46, 080A62	1550, 2142, 2172	1024, 1060, 1061	G10600	P 2
1.4	EN 10 083-1 – 42 CrMo 4 - EN 10 270-2	1.7225, 1.3505, 1.6582, 1.3247	42CrMo4, 100Cr6, 34CrNiMo6, S2-10-1-8	708M40/42, 817M40, 534A99, BM2, BT42	1672-04, 2090, 2244-02, 2541-02	4140, A2, 4340, M42, M2	G41270, G41470, T30102, T11342	P 3
1.5	EN ISO 4957 – HS6-5-2 - EN-ISO 4957 – HS6-5-2-5	1.2510, 1.2713, 1.3247, 1.2080	100MnCrW12, 55NiCrMoV6, X210Cr12, S2-10-1-8	B01, BM2, BT42, 826 M40, 830M31	2244-04, 2541-03, 2550, 2722, 2723	01, L6, M42, D3, A2, M2, 4140, 8630	G86300, T30102' T11302, T30403, T11342	P 4
1.6	EN-ISO 4957 – HS2-9-1-8	1.2510, 1.2713, 1.3247, 1.2080	100MnCrW12, X210Cr12, S2-10-1-8	801, 826 M40, 830M31	2244-05, 2541-05, , HARDOX 400	01, L6, M42, D3, 4140, 8130	T30403, G41400, J14047	H 1
1.7	EN-ISO 4957 – HS2-9-1-8	1.2510	100MnCrW4	BO1, BD3, BH13	HARDOX 500			H 3
1.8	EN-ISO 4957 – X40CrMoV5-1	1.3343, 1.2344	S6-5-2, GX40CrMoV5-1	BM2, BH13	2242 HARDOX 600			H 4
2.1	EN 10 088-3 – X14CrMoS17	1.4305, 1.4104	X10CrNiS189, X12CrMoS17	303 S21 , 416 S37	2301, 2312, 2314, 2346, 2380	303, 416, 430F	S30300, S41600, S43020	M 1
2.2.	EN 10 088-2,0 -3 – 1.4301+AT	1.4301, 1.4541, 1.4571	X5CrNi189 X10CrNiMoTi1810	304 S15, 321 S17, 316 S, 320 S12	2310, 2333, 2337, 2343, 2353, 2377	304, 321, 316	S30400, S32100, S31600	M 3
2.3	EN 10 088-3 – 1.4460	1.4460, 1.4512, 1.4582	XBCrNiMo275, X4CrNiMoN6257	317 S16, 316 S16	2324, 2387, 2570	409, 430, 436	S40900, S4300, S43600	M 2
2.4	EN 1.4547	1.4547	X2CrNiMo20-18-6	HR41	2378	17-4PH	S31254	S 2
3.1	EN 1561 – EN-JL1030	0.6010, 0.6040	GG10, GG40	Grade150, Grade 400	0120, 0212, 0814	ASTM A48 class 20	F11401, F12801	K 1
3.2	EN 1561 – EN-JL1050	0.6025, 0.6040	GG25, GG40	Grade200, Grade 400	0125, 0130, 0140, 0217	ASTM A48 class 40, STM A48 class 60	F12801, F14101	K 2
3.3	EN 1561 – EN-JL2040	0.7040, 0.7070, 0.8145, 0.8045	GGG40, GGG70, GTS45-06, GTW45-07	420/12, P440/7, 700/2, 30g/72	0219, 0717, 0727, 0732, 0852	ASTM A220 grade 40010, ASTM A602 grade M4504	F22830, F20001	K 3
3.4	EN 1561 – EN-JL2050	0.7040, 0.7070, 0.8145, 0.8045	GGG40, GGG70, GTS45-06, GTW45-07	420/12, P440/7, 700/2, 30g/72	0221, 0223, 0737, 0854	ASTM A220 grade 90001, ASTM A602 grade M8501	F26230, 20005	K 4
4.1		3.7024LN	Ti99,8	TA1 to 9	Ti99,8	ASTM B265 grade 1	R50250	S 1
4.2		3.7164LN, 3.7119LN	TiAl6V4, TiAl55n2	TA10 to 14, TA17	TiAl6V4, TiAl5Sn2	AMS4928	R54790	S 2
4.3		3.7164LN, 3.7174LN, 3.7184LN	TiAl6V4, TiAl6V5Sn2, TiAl4MoSn2	TA10 to 13, TA28	TiAl6V5Sn2	AMS4928, AMS4971	R56400, R54790	S 3
5.1		2.4060, 2.4066	Nickel 200, 270, Ni99,6	NA 11, NA12	Ni200, Ni270	Nickel 200, Nickel 230	N02200, N02230	S 1
5.2		2.4630LN, 2.4602, 2.4650LN	Nimonic 75, Monel 400, Hastelloy C, Inconel 600	HR203, 3027-76		Nimonic 75,Monel400, Hastelloy, Inconel600	N06075, N10002, N04400, N06600	S 2
5.3		2.4668LN, 2.4631LN, 2.6554LN	Inconel 718, Nimonic 80A, Waspaloy	HR8, HR401, 601		Inconel 718, 625, Nimonic 80	N07718, N07080, N06625	S 3
6.1	EN 1652 – CW004A	2.0060, 2.0070	E-Cu57, SE-Cu	C101	5010	101	C10100, C1020	N 3
6.2	EN 1652 – CW612N	2.0380, 2.0360, 2.1030, 2.1080	CuZn39Pb2, CuZn40, CuSn8, CuSn6Zn	CZ120, CZ109,PB104	5168		C28000, C37710	N 4
6.3	EN 1652 – CW508L	2.0321, 2.0260	CuZn37, CuZn28	CZ108,CZ106	5150		C2600, C27200	N 3
6.4			Ampco 18, Ampco 25	AB1 type	5238, JM7-20			N 4
7.1	EN 485-2 – EN AW-1070A	3.0255	Al99,5	LMO, 1 B (1050A)	4005	EC, 1060, 1100	A91060, A91100	N 1
7.2	EN 755-2 – EN AW-5005	3.1355, 3.3525	AlCuMg2, AlMg2Mn0,8	LM5, 10, 12, N4 (5251)	4106, 4212	380, 520.0, 520.2, 2024, 6061	A03800, A05200, A92024	N 1
7.3	EN 1706 – EN AC-42000	3.2162.05, 3.2341.01	GD-AlSi8Cu, G-AlSi5Mg	LM2,4,16,18,21,22,, 24,25,26,27,L109	4244	319.0, 333.0, 319.1, 356.0	A03190, A03330, C35600	N 1
7.4	SS-EN 1706 – EN AC-47000	3.2581.01	G-AlSi18, G-AlSi12	LM6, 12,13, 20, 28, 29, 30	4260, 4261, 4262	4032, 222.1, A332.0	A94032, A02220, A13320	N 2
8.1				Polystyrene, Nylon, PVC Cellulose, Acetate & Nitrate		Polystyrene, Nylon, PVC		O
8.2				Ebonite, Tufnol, Bakelite		Bakelite		O
8.3				Kevlar, Printed Circuit boards		Kevlar		O
9,1				Ferrotic, Ferrotitanit				H
10.1				Graphite				O

Tabla de Velocidad de Corte

DORMER

Vc																	
m/Min		5	8	10	15	20	25	30	40	50	60	70	80	90	100	110	150
Feet/Min		16	26	32	50	66	82	98	130	165	197	230	262	296	330	362	495
Ø		RPM															
mm	inch																
1,00		1592	2546	3183	4775	6366	7958	9549	12732	15916	19099	22282	25465	28648	31831	35014	47747
1,50		1061	1698	2122	3183	4244	5305	6366	8488	10610	12732	14854	16977	19099	21221	23343	31831
2,00		796	1273	1592	2387	3183	3979	4775	6366	7958	9549	11141	12732	14324	15916	17507	23873
2,50		637	1019	1273	1910	2546	3183	3820	5093	6366	7639	8913	10186	11459	12732	14006	19099
3,00		531	849	1061	1592	2122	2653	3183	4244	5305	6366	7427	8488	9549	10610	11671	15916
3,18	1/8	500	801	1001	1501	2002	2502	3003	4004	5005	6006	7007	8008	9009	10010	11011	15015
3,50		455	728	909	1364	1819	2274	2728	3638	4547	5457	6366	7276	8185	9095	10004	13642
4,00		398	637	796	1194	1592	1989	2387	3183	3979	4775	5570	6366	7162	7958	8754	11937
4,50		354	566	707	1061	1415	1768	2122	2829	3537	4244	4951	5659	6366	7074	7781	10610
4,76	3/16	334	535	669	1003	1337	1672	2006	2675	3344	4012	4681	5350	6018	6687	7356	10031
5,00		318	509	637	955	1273	1592	1910	2546	3183	3820	4456	5093	5730	6366	7003	9549
6,00		265	424	531	796	1061	1326	1592	2122	2653	3183	3714	4244	4775	5305	5836	7958
6,35	1/4	251	401	501	752	1003	1253	1504	2005	2506	3008	3509	4010	4511	5013	5514	7519
7,00		227	364	455	682	909	1137	1364	1819	2274	2728	3183	3638	4093	4547	5002	6821
7,94	5/16	200	321	401	601	802	1002	1203	1604	2004	2405	2806	3207	3608	4009	4410	6013
8,00		199	318	398	597	796	995	1194	1592	1989	2387	2785	3183	3581	3979	4377	5968
9,00		177	283	354	531	707	884	1061	1415	1768	2122	2476	2829	3183	3537	3890	5305
9,53	3/8	167	267	334	501	668	835	1002	1336	1670	2004	2338	2672	3006	3340	3674	5010
10,00		159	255	318	477	637	796	955	1273	1592	1910	2228	2546	2865	3183	3501	4775
11,11	7/16	143	229	287	430	573	716	860	1146	1433	1719	2006	2292	2579	2865	3152	4298
12,00		133	212	265	398	531	663	796	1061	1326	1592	1857	2122	2387	2653	2918	3979
12,70	1/2	125	201	251	376	501	627	752	1003	1253	1504	1754	2005	2256	2506	2757	3760
14,00		114	182	227	341	455	568	682	909	1137	1364	1592	1819	2046	2274	2501	3410
14,29	9/16	111	178	223	334	446	557	668	891	1114	1337	1559	1782	2005	2228	2450	3341
15,00		106	170	212	318	424	531	637	849	1061	1273	1485	1698	1910	2122	2334	3183
15,88	5/8	100	160	200	301	401	501	601	802	1002	1203	1403	1604	1804	2004	2205	3007
16,00		99	159	199	298	398	497	597	796	995	1194	1393	1592	1790	1989	2188	2984
17,46	11/16	91	146	182	273	365	456	547	729	912	1094	1276	1458	1641	1823	2005	2735
18,00		88	141	177	265	354	442	531	707	884	1061	1238	1415	1592	1768	1945	2653
19,05	3/4	84	134	167	251	334	418	501	668	835	1003	1170	1337	1504	1671	1838	2506
20,00		80	127	159	239	318	398	477	637	796	955	1114	1273	1432	1592	1751	2387
24,00		66	106	133	199	265	332	398	531	663	796	928	1061	1194	1326	1459	1989
25,00		64	102	127	191	255	318	382	509	637	764	891	1019	1146	1273	1401	1910
27,00		59	94	118	177	236	295	354	472	589	707	825	943	1061	1179	1297	1768
30,00		53	85	106	159	212	265	318	424	531	637	743	849	955	1061	1167	1592
32,00		50	80	99	149	199	249	298	398	497	597	696	796	895	995	1094	1492
36,00		44	71	88	133	177	221	265	354	442	531	619	707	796	884	973	1326
40,00		40	64	80	119	159	199	239	318	398	477	557	637	716	796	875	1194
50,00		32	51	64	95	127	159	191	255	318	382	446	509	573	637	700	955

Dureza / Resistencia a la tracción

HV Vickers	HRC Rockwell	HB Brinell	N/ mm²	Tons/ sq. in.
940	68			
900	67			
864	66			
829	65			
800	64			
773	63			
745	62			
720	61			
698	60			
675	59			
655	58		2200	142
650		618	2180	141
640		608	2145	139
639	57	607	2140	138
630		599	2105	136
620		589	2070	134
615	56	584	2050	133
610		580	2030	131
600		570	1995	129
596	55	567	1980	128
590		561	1955	126
580		551	1920	124
578	54	549	1910	124
570		542	1880	122
560	53	532	1845	119
550		523	1810	117
544	52	517	1790	116
540		513	1775	115
530		504	1740	113
527	51	501	1730	112
520		494	1700	110
514	50	488	1680	109
510		485	1665	108
500		475	1630	105
497	49	472	1620	105
490		466	1595	103
484	48	460	1570	102
480		456	1555	101
473	47	449	1530	99
470		447	1520	98
460		437	1485	96
458	46	435	1480	96
450		428	1455	94
446	45	424	1440	93
440		418	1420	92

HV Vickers	HRC Rockwell	HB Brinell	N/ mm²	Tons/ sq. in.
434	44	413	1400	91
423	43	402	1360	88
413	42	393	1330	86
403	41	383	1300	84
392	40	372	1260	82
382	39	363	1230	80
373	38	354	1200	78
364	37	346	1170	76
355	36	337	1140	74
350		333	1125	73
345	35	328	1110	72
340		323	1095	71
336	34	319	1080	70
330		314	1060	69
327	33	311	1050	68
320		304	1030	67
317	32	301	1020	66
310	31	295	995	64
302	30	287	970	63
300		285	965	62
295		280	950	61
293	29	278	940	61
290		276	930	60
287	28	273	920	60
285		271	915	59
280	27	266	900	58
275		261	880	57
272	26	258	870	56
270		257	865	56
268	25	255	860	56
265		252	850	55
260	24	247	835	54
255	23	242	820	53
250	22	238	800	52
245		233	785	51
243	21	231	780	50
240		228	770	50
235		223	755	49
230		219	740	48
225		214	720	47
220		209	705	46
215		204	690	45
210		199	675	44
205		195	660	43
200		190	640	41

TOLERANCIA

	Ø mm							
	> 1 ≤ 3	> 3 ≤ 6	> 6 ≤ 10	> 10 ≤ 18	> 18 ≤ 30	> 30 ≤ 50	> 50 ≤ 80	> 80 ≤ 120
Tol	µm							
e8	-14 / -28	-20 / -38	-25 / -47	-32 / -59	-40 / -73	-50 / -89	-60 / -106	-72 / -126
f6	-6 / -12	-10 / -18	-13 / -22	-16 / -27	-20 / -33	-25 / -41	-30 / -49	- 36 / -58
f7	-6 / -16	-10 / -22	-13 / -28	-16 / -34	-20 / -41	-25 / -50	-30 / -60	-36 / -71
h6	0 / -6	0 / -8	0 / -9	0 / -11	0 / -13	0 / -16	0 / -19	0 / -22
h7	0 / -10	0 / -12	0 / -15	0 / -18	0 / -21	0 / -25	0 / -30	0 / -35
h8	0 / -14	0 / -18	0 / -22	0 / -27	0 / -33	0 / -39	0 / -46	0 / -54
h9	0 / -25	0 / -30	0 / -36	0 / -43	0 / -52	0 / -62	0 / -74	0 / -87
h10	0 / -40	0 / -48	0 / -58	0 / -70	0 / -84	0 / -100	0 / -120	0 / -140
h11	0 / -60	0 / -75	0 / -90	0 / -110	0 / -130	0 / -160	0 / -190	0 / -220
h12	0 / -100	0 / -120	0 / -150	0 / -180	0 / -210	0 / -250	0 / -300	0 / -350
k10	+40 / 0	+48 / 0	+58 / 0	+70 / 0	+84 / 0	+100 / 0	+120 / 0	+140 / 0
k12	+100 / 0	+120 / 0	+150 / 0	+180 / 0	+210 / 0	+250 / 0	+300 / 0	+350 / 0
m7	+2 / +12	+4 / +16	+6 / +21	+7 / +25	+8 / +29	+9 / +34	+11 / +41	+13 / +48
js14	+/- 125	+/- 150	+/- 180	+/- 215	+/- 260	+/- 310	+/- 370	+/- 435
js16	+/- 300	+/- 375	+/- 450	+/- 550	+/- 650	+/- 800	+/- 950	+/- 1100
H7	+10 / 0	+12 / 0	+15 / 0	+18 / 0	+21 / 0	+25 / 0	+30 / 0	+35 / 0
H8	+14 / 0	+18 / 0	+22 / 0	+27 / 0	+ 33 / 0	+39 / 0	+46 / 0	+54 / 0

1µm = 0.001mm

TALADRADO

INSTRUCCIONES GENERALES PARA EL TALADRADO

1. Seleccione la broca más apropiada para la aplicación, en función del material que se debe mecanizar, la capacidad de la máquina herramienta y el refrigerante que se va a utilizar.

2. La falta de rigidez del componente y del husillo de la máquina herramienta puede ocasionar daños en la broca, además de en el componente y en la máquina. Deberá garantizarse por tanto la máxima estabilidad en todo momento. Dicha estabilidad puede mejorarse seleccionando la broca más corta posible para la aplicación.

3. La sujeción de la herramienta es un aspecto importante en la operación de taladrar y no se puede permitir que la broca resbale o que se mueva en el portaherramientas.

4. El uso de refrigerantes y lubricantes adecuados se recomienda en función de la operación específica de taladrado. Cuando utilice refrigerantes y lubricantes, asegure un suministro abundante, especialmente en la punta de la broca.

5. La evacuación de la viruta durante el taladrado es esencial para garantizar un correcto procedimiento del taladrado. No permita que las estrías de la broca se atasquen de virutas.

6. Al reafilar la broca, cerciórese de que se ha eliminado todo el desgaste y de que se produce la geometría de punta correcta.

TAMAÑO DEL AGUJERO

A medida que aumenta la complejidad de las configuraciones de geometría, sustrato y recubrimiento, aumenta también la capacidad de la broca para producir tamaños de agujero más precisos. En general, una herramienta con geometría estándar logrará, como máximo, un tamaño de agujero H12. Sin embargo, a medida que la configuración de la broca se hace más compleja, el tamaño del agujero puede llegar, en condiciones favorables, hasta una tolerancia H8. A continuación se muestran las tolerancias de agujero que se puede lograr para cada tipo de brocas:

- Brocas HSS para aplicaciones generales – H12
- Brocas HSS/HSS-E con estrías parabólicas para agujeros profundos – H10
- Metal duro con recubrimiento de alto rendimiento – H8/H9

ESTRATEGIA DE TALADRADO DE AGUJEROS PROFUNDOS

Al taladrar agujeros profundos, pueden adoptarse varios métodos para lograr la profundidad requerida. En el ejemplo se muestran cuatro formas de taladrar un agujero con una profundidad de 10 veces el diámetro de la broca.

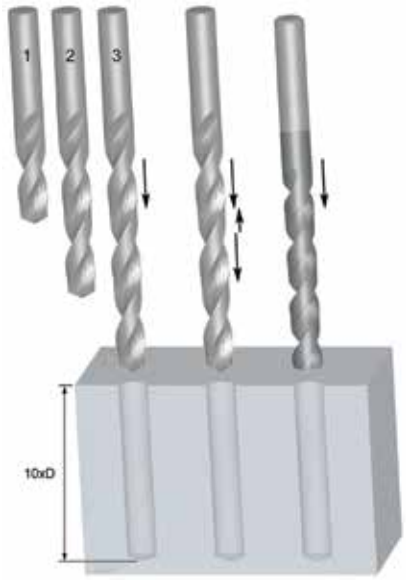

	Taladro en series	Series Drilling
Número de brocas	3 (2,5 xD, 6 xD,10 xD)	2 (2,5 xD,10 xD)
Tipo de broca	Geometría estándar, aplicaciones generales	Geometría estándar, aplicaciones generales
+ / -	Caro Largo	Más rentable Rápido

	Taladro con desahogo (misma broca)	Taladro en 1 paso
Número de brocas	1 (10 xD)	1 (10 xD)
Tipo de broca	Geometría estándar, aplicaciones generales	Herramientas específica
+ / -	Largo	Rentable Rápido

PROBLEMAS EN EL TALADRADO

PROBLEMA	CAUSA	REMEDIO
Rotura o torsión en la espiga	Malas condiciones entre el mango y el portaherramientas	Comprobar que el mango y el portaherramientas están limpios y no están dañados
Grietas en el alma de la herramienta	Avance demasiado alto	Reducir el avance a un valor óptimo
	Insuficiente holgura inicia	Reafilar según las especificaciones correct
	Alma excesivamente delgada	Reafilar según las especificaciones correct
	Duro impacto en la punta de la broca	Evitar impactos en la punta de la broca. Tener precaución con las brocas del mango cónico al introducirlas/expulsarlas del husillo
Desgaste en las esquinas exteriores	Excesiva velocidad	Reducir la velocidad al valor óptimo, debe poder incrementarse el avance
Rotura de las esquinas exteriores	Montaje de la herramienta inestable	Reducir el movimiento en el componente
Labios de corte astillados	Excesiva holgura inicial	Reafilar según las especificaciones correct
Rotura en la salida de la estría	Estrías atascadas	Adoptar un concepto de taladrado con desahogo/en serie
	Resbalamiento de la broca	Asegurar que la broca está bien sujeta en el portapinzas y el husillo
Acabado en espiral del agujero	Avance insuficient	Incrementar el avance
	Exactitud del posicionamiento mala	Usar una broca de centrar antes del taladrado
Tamaño del agujero demasiado grande	Geometría de la punta incorrecta	Corregir la geometría de la punta
	Holgura de la viruta deficient	Ajustar la velocidad y el avance y la longitud de desahogo para lograr una viruta más manejable

ESCARIADO

INSTRUCCIONES GENERALES PARA EL ESCARIADO

Para obtener los mejores resultados con los escariadores, es esencial hacerlos 'trabajar'. Un error frecuente es el de preparar orificios para escariar dejando dentro poco material. Si se deja en el orificio material insuficiente antes de escariar, el escariador rozará, se desgastará rápidamente y el resultado será la pérdida de diámetro. Para garantizar un buen rendimiento, también es importante no dejar demasiado material en el agujero. (Véase el apartado "Eliminación de material" a continuación).

1. Seleccionar el tipo óptimo de escariador y las velocidades y avances óptimos para la aplicación. Asegurar que los agujeros pretaladrados sean del diámetro correcto.

2. La pieza de trabajo debe sujetarse rígida y el husillo de la máquina no debe tener juego.

3. El portapinzas en el que se sujeta un escariador de mango recto debe ser de buena calidad. Si el escariador resbala en el portapinzas y el avance es automático, el escariador podría romperse.

4. Mantener al mínimo el vuelo de la herramienta respecto al husillo de la máquina.

5. Usar los lubricantes recomendados para prolongar la vida útil del escariador y asegurar que el fluido llegue a los filos de corte. Como la operación de escariar no es un trabajo de corte pesado, normalmente bastará una disolución 40:1 de aceite soluble. Cuando se trata de mecanizado en seco, se puede emplear aire a presión (ej. con el mecanizado de acero de fundición gris).

6. No permitir que las estrías del escariador se atasquen de virutas.

7. Antes de volver a reafilar el escariador, comprobar la concentricidad entre centros. En la mayoría de los casos, sólo habrá que rectificar el paso del bisel

8. Mantener afilados los escariadores. El reafilado frecuente es rentable, pero es importante entender que los escariadores sólo cortan en el chaflán de entrada y no en las superficies entre estrías. Por lo tanto, sólo hay que rectificar dichas superficies La exactitud de la rectificación es importante para la calidad el acabado del orificio y la vida útil de la herramienta

ELIMINACIÓN DE MATERIAL

La eliminación de material recomendada al escariar depende del material de aplicación y el acabado de la superficie del orificio pretaladrado. En la siguiente tabla se dan las directrices generales para la eliminación de material

Tamaño del agujero escariado (mm)	Con pretaladrado	Con pretaladrado de núcleo
Menos de 4	0.1	0.1
De 4 a 11	0.2	0.15
De 11 a 39	0.3	0.2
De 39 a 50	0.4	0.3

Tamaño del agujero escariado (pulgadas)	Con pretaladrado	Con pretaladrado de núcleo
Menos de 3/16	0.004	0.004
3/16 a ½	0.008	0.006
½ a 1.½	0.010	0.008
1.½ a 2	0.016	0.010

LÍMITES DE TOLERANCIA

1. EN EL DIÁMETRO DE CORTE DE LOS ESCARIADORES ESTÁNDAR
   El diámetro (d1) se mide sobre la superficie circular entre estrías inmediatamente detrás del bisel o paso cónico. La tolerancia se ajusta a DIN 1420 y sirve para producir agujeros H7.

TOLERANCIA DEL ESCARIADOR			
Diámetro (mm)		Límite de tolerancia (mm)	
Por encima de	Hasta e incluido	Alto +	Bajo +
	3	0.008	0.004
3	6	0.010	0.005
6	10	0.012	0.006
10	18	0.015	0.008

TOLERANCIA DEL ESCARIADOR			
Diámetro (mm)		Límite de tolerancia (mm)	
Por encima de	Hasta e incluido	Alto +	Bajo +
18	30	0.017	0.009
30	50	0.021	0.012
50	80	0.025	0.014

2. EN UN AGUJERO H7
   La tolerancia más común en un agujero acabado es H7 (ver la tabla de abajo). Para cualquier otra tolerancia, ver la figura y la tabla del punto 3 (se muestra más abajo); esta tabla se puede usar para calcular el ancho y la ubicación de tolerancia de los escariadores.

TOLERANCIA DEL AGUJERO			
Diámetro (mm)		Límite de tolerancia (mm)	
Por encima de	Hasta e incluido	Alto +	Bajo +
	3	0.010	0
3	6	0.012	0
6	10	0.015	0
10	18	0.018	0

TOLERANCIA DEL AGUJERO			
Diámetro (mm)		Límite de tolerancia (mm)	
Por encima de	Hasta e incluido	Alto +	Bajo +
18	30	0.021	0
30	50	0.025	0
50	80	0.030	0

3. Cuando es necesario definir las dimensiones para un escariador especial para cortar según una tolerancia específica, por ejemplo D8, se puede usar esta guía

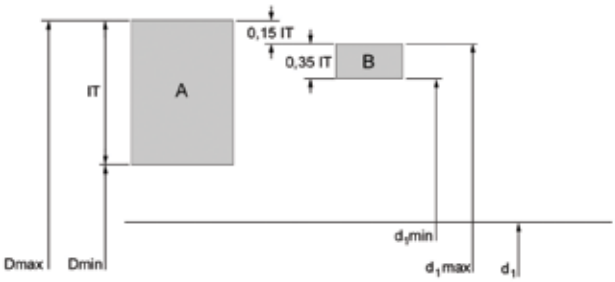

A = Tolerancia del Agujero
B = Tolerancia del Escariador
IT = Ancho de tolerancia
Dmax = Diámetro máx. del agujero
Dmin = Diámetro mín. del agujero
d_1 = Diámetro nominal
$d_1$max = Diámetro máx. del escariador
$d_1$min = Diámetro mín. del escariador

	Ancho de tolerancia del diámetro (mm)							
Ancho de tolerancia (microns)	por encima de 1 incl. 3	por encima de 3 incl. 6	por encima de 6 incl. 10	por encima de 10 incl. 18	por encima de 18 incl. 30	por encima de 30 incl. 50	por encima de 50 incl. 80	por encima de 80 incl. 120
IT5	4	5	6	8	9	11	13	15
IT6	6	8	9	11	13	16	19	22
IT7	10	12	15	18	21	25	30	35
IT8	14	18	22	27	33	39	46	54
IT9	25	30	36	43	52	62	74	87
IT10	40	48	58	70	84	100	120	140
IT11	60	75	90	110	130	160	190	220
IT12	100	120	150	180	210	250	300	350

por ejemplo: agujero de 10 mm con tolerancia D8, diám. máx. = 10,062, diám. mín. = 10,040, toler. del agujero (IT8) = 0,022

Límite máximo: 0.15 x tolerancia de agujero (IT8) = 0.0033, redondeado = 0.004
Límite mínimo: 0.35 x tolerancia de agujero (IT8) = 0.0077, redondeado = 0.008

Límite máximo para escariador = 10.062 - 0.004 = 10.058
Límite mínimo para escariador = 10.058 - 0.008 = 10.050

PROBLEMAS EN EL ESCARIADO

PROBLEMA	CAUSA	REMEDIO
Rotura o torsión en la espiga	Ajuste incorrecto entre el mango y el portaherramientas	Comprobar que el mango y el portaherramientas están limpios y no están dañados
Desgaste rápido de la herramienta	Material insuficiente que elimina	Aumentar la cantidad de material que eliminar
Agujero sobredimensionado	Excesiva variación de la altura del labio	Reafilar según las especificaciones correct
	Desplazamiento en el husillo de la máquina	Reparar y rectificar el desplazamiento del husill
	Desviaciones en el portaherramientas	Reemplazar el portaherramientas
	El mango de la herramienta esta dañado	Sustituir o rectificar el mang
	Forma ovalada de la herramienta	Sustituir o rectificar la herramient
	Ángulo del paso biselado asimétrico	Reafilar según las especificaciones correct
	Avance o velocidad de corte de la herramienta demasiado alto	Ajustar las condiciones de corte de acuerdo con el catálogo
Menor tamaño del agujero	Material insuficiente que elimina	Aumentar la cantidad de material que eliminar
	Excesiva generación de calor en el escariado El agujero se amplía y se contrae	Incrementar la refrigeración
	El diámetro de la herramienta esta desgastado e infradimensionado	Reafilar según las especificaciones correct
	Avance o velocidad de corte de la herramienta demasiado baja	Ajustar las condiciones de corte de acuerdo con el catálogo
	El agujero pretaladrado es demasiado pequeño	Reducir la cantidad de material que eliminar
Agujeros ovalados y cónicos	Desplazamiento en el husillo de la máquina	Reparar y rectificar el desplazamiento del husill
	Mal centraje entre la herramienta y el agujero	Usar un escariador guiado
	Ángulo de avance del bisel asimétrico	Reafilar según las especificaciones correct
Acabado del agujero deficient	Excesivo material a eliminar	Reducir la cantidad de material que eliminar
	Herramienta muy gastada	Reafilar según las especificaciones correct
	Ángulo de desprendimiento demasiado pequeño	Reafilar según las especificaciones correct
	Emulsión o aceite de corte demasiado diluido	Incrementar el % de concentración
	Avance y/o velocidad demasiado baja	Ajustar las condiciones de corte de acuerdo con el catálogo
	Velocidad de corte demasiado alta	Ajustar las condiciones de corte de acuerdo con el catálogo
La herramienta se clava o se rompe	Herramienta muy gastada	Reafilar según las especificaciones correct
	Chaflán de salida de la herramienta demasiado pequeño	Verificar y remplazar o modificar l herramienta
	Ancho entre estrías demasiado grande	Verificar y remplazar o modificar la herramien
	El material de la pieza de trabajo tiende a retorcerse	Utilizar un escariador regulable para compensar el desplazamiento
	El agujero pretaladrado es demasiado pequeño	Reducir la cantidad de material que eliminar
	Material heterogéneo con inclusiones duras	Usar un escariador de metal duro

THREAD MILLING

GENERAL HINTS ON THREAD MILLING

1. Thread milling is the process of generating a thread by the circular interpolation of a milling cutter with a specific thread geometry ground around it's periphery.

2. To be able to use a thread milling cutter it is necessary to have a CNC machine that can make circular paths.

3. Most modern CNC machines are equipped with machining cycles for thread milling

4. Consult the manual or contact the machine supplier for information

FEATURES AND BENEFITS

1. Thread milling gives increased reliability and tool life

2. Threadmills produce small chips resulting in problem free threading

3. Tolerance adjustments can be made using exact co-ordinates

4. You can generate a fuller thread to the bottom of the hole

5. Capable of machining a wide variety of materials

6. The same cutter can produce different size threads provided the pitch is the same

7. Both right and left hand threads can be created with the same tool

8. Some thread mills can also machine the entry chamfer (J200, J205, J260)

CHOOSING YOUR TOOL

Thread milling cutters have an item code based on the type, diameter (d_1) and pitch (P)

The item code is the number to use when ordering your tool

Always consult the catalogue to ensure you have the correct thread dimensions

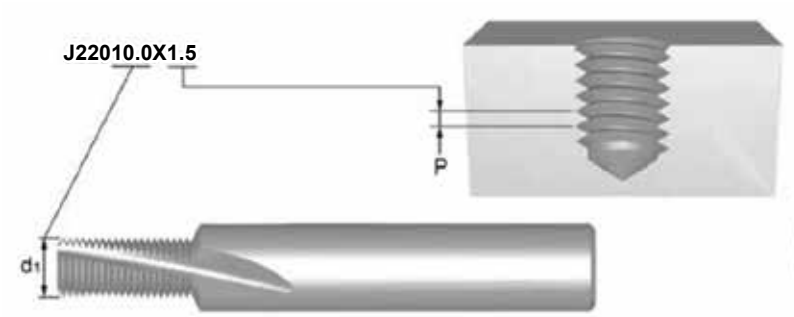

This thread milling cutter can be used for threads ≥ M12x1.5 (M14x1.5, M18x1.5 etc)

PROGRAMMING WITH Rprg

- For easy adjustment of the thread tolerance always program with radius correction
- The Rprg value is the start value for a new cutter and is printed on the cutter shank. This should be entered in the tool memory offset
- Rprg is based on the theoretical zero-line of the thread meaning that when you program using Rprg the thread is never oversize, but normally tight
- This means that with a small modification to the program co-ordinates you can create the thread to the required size

RECOMMENDATIONS

- Always use the correct cutting data (refer to the cutting data chart on page 198)
- Use the recommended drill size for the thread diameter, as for conventional taps
- For easy adjustment of the thread tolerance always start with the Rprg value printed on the shank of the threadmill
- Use a gauge to check the tolerance on the first thread to establish if the radius needs to be corrected. The radius can be corrected 2 or 3 times before the threadmill is worn out
- When dry machining, compressed air is recommended to help with swarf removal
- When threading more difficult materials, it is recommended to take 2 or 3 passe

ROSCADO

INSTRUCCIONES GENERALES PARA EL ROSCADO

El éxito de toda operación de roscado depende de diversos factores; todos ellos afectan a la calidad del producto acabado.

1. Seleccione el diseño correcto del macho para el material del componente y el tipo de agujero, es decir, pasante o ciego, de la tabla Clasificación de materiales
2. Asegurar que el componente esté bien sujeto, ya que el movimiento lateral podría causar la rotura del macho o la formación de roscas de mala calidad.
3. Seleccionar el tamaño correcto de la broca de la página del catálogo correspondiente. Asegurarse siempre de mantener al mínimo el endurecimiento del material del componente.
4. Seleccionar la velocidad de corte correcta, según se muestra en la página de productos del catálogo.
5. Usar el fluido de corte adecuado para la aplicación correcta
6. En aplicaciones NC, asegurar que el valor de avance escogido para el programa sea el correcto. Al usar un accesorio de roscar, se recomienda un 95% a 97% del paso para permitir que el macho genere su propio paso.
7. Siempre que sea posible, sujetar el macho con un dispositivo de roscar de alta calidad con limitador de par; esto asegura el movimiento axial libre del macho y lo sitúa encuadrado en el agujero. Además protege el macho de una posible rotura si “toca fondo” accidentalmente en un agujero ciego.
8. Asegurar la introducción suave del macho en el agujero, ya que un avance desigual podría producir “abocinamiento”.

TABLA DE TOLERANCIAS SOBRE EL MACHO COMPARADA CON TOLERANCIA SOBRE ROSCA INTERNA (TUERCA)

Clase de tolerancia, Macho			**Tolerancia, rosca interna (Tuerca)**					**Aplicación**
ISO	DIN	ANSI BS						
ISO 1	4 H	3 B	4 H	5 H				Ajustes sin aumentos
ISO 2	6 H	2 B	4 G	5 G	6 H			Ajustes normales
ISO 3	6 G	1 B			6 G	7 H	8 H	Ajustes con aumentos
-	7 G	-				7 G	8 G	Pérdida de los ajustes por realizar recubrimientos

PROBLEMAS EN LA REALIZACIÓN DE ROSCAS

PROBLEMA	CAUSA	REMEDIO
Tamaño demasiado grande	Tolerancia incorrecta	Cambiar a un macho con una tolerancia inferior en la rosca
	Valor de avance axial incorrecto	Reducir el valor de avance un 5 –10% o incrementar la compresión del portamachos
	Tipo de macho equivocado para la aplicación	Usar un macho con entrada en hélice para roscar agujeros pasantes y un macho con estrías helicoidales para roscar agujeros ciegos. Usar un macho recubierto para prevenir la acumulación de viruta en la estría. Asegurarse de una buena alternativa con el catálogo Dormer o con el “Product Selector”
	Centrado del macho respecto el agujero incorrecto	Asegurar la sujeción del macho y centrar el macho respecto al agujero
	Falta de lubricación	Usar un buen lubricante para prevenir la acumulación de viruta. Mirar la sección de lubricantes en el manual técnico de Dormer
	Velocidad del macho demasiado baja	Seguir las recomendaciones del catálogo Dormer o “Product Selector”.
Tamaño demasiado pequeño	Tipo de macho equivocado para la aplicación	Usar un macho con entrada en hélice para roscar agujeros pasantes y un macho con estrías helicoidales para roscar agujeros ciegos. Usar un macho recubierto para prevenir la acumulación de viruta en la estría. Usar un macho con un ángulo superior. Asegurarse de una buena alternativa con el catálogo Dormer o con el “Product Selector”
	Tolerancia incorrecta	Cambiar a un macho con una tolerancia superior, especialmente en materiales con una tendencia a contraerse, así como el hierro fundido y el acero inoxidable.
	Lubricación incorrecta o falta de lubricación	Usar un buen lubricante para prevenir la acumulación de la viruta. Mirar la sección de lubricantesen el manual técnico de Dormer
	Diámetro del agujero a roscar demasiado pequeño	Aumentar el diámetro de la broca hasta el máximo valor posible. Verifique la medida de la broca prévia de rosc
	El material se contrae después del roscado	Mirar la alternativa recomendada en el catálogo Dormer o en el “Product Selector”
Viruta	Tipo de macho equivocado para la aplicación	Cambiar a un macho con un ángulo menor. Cambiar a un macho con un chaflán más largo. Usar un macho con entrada en hélic para roscar agujeros pasantes y un macho con estrías helicoidales para roscar agujeros ciegos. Usar un macho recubierto para prevenir la acumulación de viruta en la estría. Asegurarse de una buena alternativa con el Catálogo Dormer o con el “Product Selector”
	Lubricación incorrecta o falta de lubricación	Usar un buen lubricante para prevenir la acumulación de la viruta. Mirar la sección de lubricantes en el manual técnico de Dormer
	Golpe del macho con el fondo del agujero	Incrementar la profundidad del taladro o disminuir la profundidad de roscado
	Superficie de trabajo demasiado dura	Reducir la velocidad, usar una herramienta recubierta, usar un buen lubricante. Mirar en la sección de mecanizado de acero inoxidable en el manual técnico de Dormer
	Viruta generada en el roscado excesivamente enredada	Evitar un brusco cambio de sentido del macho
	El chaflán de entrada daña el agujero	Revisar la posición axial del macho y reducir el error del centrado del macho en el agujero
	Diámetro del agujero a roscar demasiado pequeño.	Aumentar el diámetro de la broca hasta el máximo valor posible. Verifique la medida de la broca prévia de rosc

PROBLEMAS EN LA REALIZACIÓN DE ROSCAS

PROBLEMA	CAUSA	REMEDIO
Rotura	Macho gastado	Rectificar el macho o usar un macho nuev
	Falta de lubricación	Usar un buen lubricante para prevenir la acumulación de la viruta. Mirar la sección de lubricantesen el manual técnico de Dormer
	Golpe del macho con el fondo del agujero	Incrementar la profundidad del taladro o disminuir la profundidad de roscado
	Velocidad del macho demasiado alta	Reducir la velocidad de corte. Seguir las recomendaciones del Catálogo Dormer o “Product Selector”
	Superficie de trabajo demasiado dura	Reducir la velocidad, usar una herramienta recubierta, usar un buen lubricante. Mirar en la sección de mecanizado de acero inoxidable en el manual técnico de Dormer
	Diámetro del agujero a roscar demasiado pequeño	Aumentar el diámetro de la broca hasta el máximo valor posible. Mirar en las tablas de taladros para roscar
	Potencia demasiado alta	Usar un portamachos de potencia regulable
	El material se contrae después del roscado	Mirar la alternativa recomendada en el Catálogo Dormer o en el “Product Selector”
Desgaste rápido	Macho equivocado para la aplicación realizada	Usar un macho con un ángulo inferior a con un rebaje superior, y/o con un chaflán largo. Usar herramientas recubiertas. Asegurarse de la alternativa correcta en el catálogo Dormer o en el “Product Selector”
	Falta de lubricación	Usar un buen lubricante para prevenir la acumulación de la viruta y la generación de temperatura. Mirar la sección de lubricantes en el manual técnico de Dormer
	Velocidad del macho demasiado alta	Reducir la velocidad de corte. Seguir las recomendaciones del Catálogo Dormer o del “Product Selector”
Acumulación de Viruta	Macho equivocado para la aplicación realizada	Usar un macho con un ángulo inferior a con un rebaje superior. Asegurarse de la alternativa correcta en el Catálogo Dormer o en el “Product Selector”
	Falta de lubricación	Usar un buen lubricante para prevenir la acumulación de la viruta. Mirar la sección de lubricantes en el manual técnico de Dormer
	Tratamiento superficial no adecuad	Elija el macho con el tratamiento superficial recomendado para la aplicación
	Velocidad del macho demasiado lenta	Seguir las recomendaciones del Catálogo Dormer o del “Product Selector”

FRESADO

CONSEJOS GENERALES PARA FRESAR

El fresado es un proceso de mecanizado de superficies, que consiste en el eliminando progresivo de una determinada cantidad de material de la pieza de trabajo con un valor de avance relativamente bajo y con una alta velocidad de rotación.

Las principal características del proceso de fresado es la eliminación de material de cada labio de la fresa, partiéndolo en pequeñas pociones (viruta).

TIPO DE FRESAS

Las tres operaciones básicas de fresado se muestran a continuación: (A) fresado cilíndrico, (B) fresado frontal, (C) fresado de acabado.

A

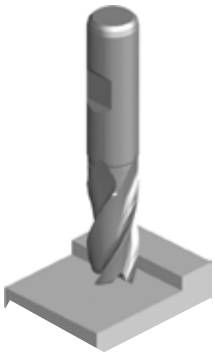

B

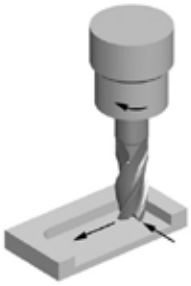

C

En el fresado cilíndrico el eje de rotación de las fresas es paralelo a la superficie de la pieza de trabajo a mecaniza . La fresa esta rodeada de dientes a lo largo de su circunferencia, cada diente actúa como un punto de corte de la herramienta.

Las fresas usadas para el fresado cilíndrico pueden tener estrías rectas o helicoidales, generando una sección de corte ortogonal u oblicua.

En el fresado frontal, la fresa se monta en el husillo de la máquina o en un portaherramientas, esta fresa tiene un eje de rotación perpendicular a la superficie de la pieza de trabajo. Las fresas frontales, tienen los filos de cort localizados en la periferia de la fresa y en la parte frontal.

En el fresado de acabado, las fresas generalmente rotan sobre un eje vertical a la pieza de trabajo. La fresa también puede estar inclinada respecto a la pieza de trabajo en caso que se quieran realizar superficies cónicas. Los dientes de corte están localizados en la periferia de la fresa y en la parte frontal.

APLICACIONES

El Volumen de Viruta Arrancado (MRR) y las aplicaciones están estrechamente relacionadas. Por cada aplicación diferente, nosotros tenemos un valor distinto de Volumen de Viruta Arrancado (MRR) que aumenta con el aumento del área de contacto entre la herramienta y la pieza de trabajo. En el catálogo Dormer se muestran las distintas aplicaciones en distintos iconos.

Contorneado	Fresado Frontal	Ranurado	Fresado por penetración	Fresado en rampa
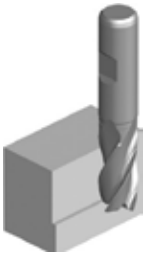		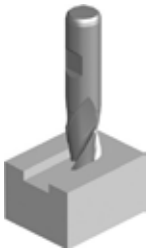	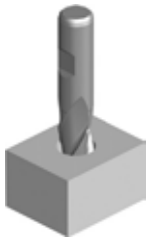	
La profundidad radial de corte debe ser inferior a 0,25 x diámetro de la fresa frontal.	La profundidad radial de corte debe ser inferior a 0,9 x diámetro, la profundidad axial de corte debe ser inferior a 0,1 x diámetro de las fresa frontal.	Para mecanizar ranuras para chavetas. La profundidad radial de corte ha de ser igual que el diámetro de la fresa frontal.	Es posible realizar un taladro en la pieza de trabajo solamente con las fresas frontales que tienen corte al centro, en estas aplicaciones el avance tiene que ser reducido	Tanto la profundidad radial como la axial se realizan simultáneamente en la pieza de trabajo.

PROBLEMAS EN EL FRESADO

PROBLEMA	CAUSA	REMEDIO
Rotura	Demasiada cantidad de material eliminado	Disminuir el avance por diente
	Avance demasiado rápido	Disminuir el avance
Desgaste	Longitud del labio o longitud total demasiado larga	Usar un portaherramientas profundo o usar una fresa más corta
	Material de la pieza de trabajo demasiado duro	Comprobar en el catálogo Dormer o en el "Product Selector" la herramienta adecuada para trabajar materiales duros, y su posible recubrimiento
	Avance y velocidad inadecuada	Comprobar en el catálogo Dormer o en el "Product Selector" los parámetros de corte adecuados
	Mala evacuación de la viruta	Mejorar la refrigeración
	Fresado convencional	Fresado inverso
	Hélice de la fresa inadecuada	Mirar las recomendaciones en el catálogo Dormer o en "Product Selector" para una correcta alternativa
Virutas	Valor de avance demasiado alto	Reducir el valor del avance
	Vibración de los dientes	Reducir las RPM
	Velocidad de corte baja	Aumentar las RPM
	Fresado convencional	Fresado inverso
	Rigidez de la herramienta	Cambiar a una herramienta más corta y/o aumentar la profundidad del mango insertada en el portaherramientas
	Rigidez de la pieza de trabajo	Sujetar más fuerte la pieza de trabajo
Corta vida de la herramienta	Material de trabajo resistente	Comprobar en el catálogo Dormer o en "Product Selector" la herramienta correcta o la alternativa más apropiada
	Rebaje del ángulo primario inadecuado	Cambiar a un ángulo de corte apropiado
	Fricción elevada entre la fresa y la pieza de trabajo	Usar una herramienta recubierta
Mal acabado superficia	Avance demasiado rápido	Disminuir el avance
	Velocidad demasiado lenta	Aumentar la velocidad
	Viruta cortante y penetrante	Disminuir la cantidad de material a eliminar
	Desgaste de la herramienta	Sustituir o rectificar la herramient
	Acumulación de viruta en el fil	Sustituir a una herramienta con un ángulo de hélice superior
	Micro-soldadura de la viruta	Aumentar la cantidad de refrigerante

PROBLEMA	CAUSA	REMEDIO
Inexactitud en la pieza de trabajo	Flexión de la herramienta	Cambiar a una herramienta más corta y/o aumentar la profundidad del mango insertada en el portaherramientas
	Número de labios insuficient	Usar una herramienta con más labios
	Desgaste del porteherramientas o herramienta mal sujeta	Reparar o reemplazar el portaherramientas
	Baja rigidez en la sujeción de la herramienta	Mejorar la rigidez con una herramienta más corta
	Baja rigidez del husillo de la máquina	Usar un husillo más grande
Vibración	Valores de avance y velocidad demasiado altos	Cambiar a valores de avance y de velocidad correctos con la ayuda del catálogo Dormer o “Product Selector”
	Longitud de los labios o longitud total demasiado larga	Cambiar a una herramienta más corta y /o aumentar la profundidad del mango insertada en el portaherramientas
	Corte demasiado profundo	Disminuir la profundidad de corte
	Rigidez insuficiente (entre la máquina y el portaherramientas)	Corregir el portaherramientas y cambiarlo si es necesario

CARBIDE BURRS

GENERAL HINTS ON CARBIDE BURRS

Carbide Burrs are widely used for preparing and finishing components in a wide range of materials

They are generally used by hand and mounted in air driven die-grinders

FEATURES AND BENEFITS

1. Toughened and hardened steel shanks improve rigidity and reduce the risk of bending or vibration
2. Accurately ground shanks improve holding and reduce likelihood of spinning
3. Special brazing elements prevent high temperature failure and also provide increased strength to withstand pressure and impact
4. The universal Double Cut geometry is suitable for a wide range of materials and applications
5. Material specific geometries are also available suited to Steel (ST), Stainless Steel (VA), Aluminium (AL) and Fibreglass (GRP)
6. Available with TiAlN coating to increase tool life in abrasive materials
7. Ball nose burrs are ground with Skip Flute geometry
8. This provides active geometry towards the centre of the burr, improving the cutting action and reducing the chances of swarf build up and clogging

Skip

Normal

SAFETY FIRST

1. High speed rotating tools are hazardous and can be dangerous if miss-used
2. Always disconnect the die grinder from the air supply before attempting to change the burrs
3. Check the condition of the die grinder and if possible use low vibration versions
4. Always use the appropriate protective equipment and ensure anyone working close by is also protected

Personal protective equipment must be worn at all times.

RECOMMENDATIONS

- Always use the appropriate speed rated die grinder (refer to the speed chart on page??)
- Routine maintenance of die grinders is important, ensure they are oiled and bearings are not worn
- Always clean the clamping nut, collet and internal taper of the die grinder when changing a burr
- Try to avoid mechanical shock and heavy impact of the burrs
- Try to avoid thermal shock by not allowing the burr to become overheated
- Don't plunge the burr too deep into the workpiece material or jam the bur into corners or channels

TROUBLE SHOOTING USING BURRS

PROBLEM	CAUSE
Chipping of Burr Teeth	Running too low rpm, can cause bouncing
	Eccentricity (worn spindle, collet or bearings)
	Plunging and jamming the burr into the workpiece
Clogging of Burr Teeth	Flute length or overall length too long
	Incorrect geometry choice for workpiece material
Premature Wear	Running too high rpm for size of burr and workpiece material
	Eccentricity (worn spindle, collet or bearings)
Head Detaches from Shank	Running too high rpm causing overheating
	Running for prolonged periods causing overheating

English			Hardness	Tensile strength	
Application Material Groups			**HB**	**N/mm²**	**ISO**
1. Steel	1.1	Magnetic soft steel	< 120	< 400	P 1
	1.2	Structural steel, case carburizing steel	< 200	< 700	P 1
	1.3	Plain Carbon steel	< 250	< 850	P 2
	1.4	Alloy steel	< 250	< 850	P 3
	1.5	Alloy steel, Hardened and tempered steel	> 250 < 350	> 850 < 1200	P 4
	1.6	Alloy steel, Hardened and tempered steel	> 350	> 1200 < 1620	H 1
	1.7	Alloy steel, Heat treated	49-55HRC	> 1620	H 3
	1.8	Alloy steel, Hardened & Wear resistant steel	55-63HRC	> 1980	H 4
2. Stainless Steel	2.1	Free machining, Stainless Steel	< 250	< 850	M 1
	2.2.	Austenitic,	< 320	< 1100	M 3
	2.3	Ferritic + Austenitic, Ferritic, Martensitic	< 300	< 1000	M 2
	2.4	Precipitation hardened	>320 <410	>1100 <1400	S 2
3. Cast Iron	3.1	Lamellar graphite	< 150	> 500	K 1
	3.2	Lamellar graphite	> 150 <300	> 500 < 1000	K 2
	3.3	Nodular graphite, Malleable Cast Iron	< 200	< 700	K 3
	3.4	Nodular graphite, Malleable Cast Iron	> 200 < 300	> 700 < 1000	K 4
4. Titanium	4.1	Titanium, unalloyed	< 200	< 700	S 1
	4.2	Titanium, alloyed	< 270	< 900	S 2
	4.3	Titanium, alloyed	> 270 < 350	> 900 ≤ 1250	S 3
5. Nickel	5.1	Nickel, unalloyed	< 150	< 500	S 1
	5.2	Nickel, alloyed	< 270	> 900	S 2
	5.3	Nickel, alloyed	> 270 < 350	> 900 < 1200	S 3
6. Copper	6.1	Copper	< 100	< 350	N 3
	6.2	β-Brass, Bronze	< 200	< 700	N 4
	6.3	α-Brass	< 200	< 700	N 3
	6.4	High Strength Bronze	< 470	< 1500	N 4
7. Aluminium Magnesium	7.1	Al, Mg, unalloyed	< 100	< 350	N 1
	7.2	Al alloyed, Si < 0.5%	< 150	< 500	N 1
	7.3	Al alloyed, Si > 0.5% < 10%	< 120	< 400	N 1
	7.4	Al alloyed, Si > 10% Whisker reinforced. Al-alloys MG-alloys	< 120	< 400	N 2
8. Synthetic materials	8.1	Thermoplastics	---	---	O
	8.2	Thermosetting plastics	---	---	O
	8.3	Reinforced plastic materials	---	---	O
9. Hard material	9,1	Cermets (metals-ceramics)	< 550	< 1700	H
10. Graphite	10.1	Graphite	---	< 100	O

DORMER

Ex AMPLES OF WORKPIECE MATERIALS FROM DIFFERENT STANDARDS

AMG	EN	W Nr.	DIN	BS	SS	USA	UNS	ISO
1.1		1.1015, 1.1013	Rfe60, Rfe100	230Mo7, 050A12	1160	Leaded Steels	G12120	P 1
1.2	EN 10 025 – S235JRG2	1.1012, 1.1053, 1.7131	St37-2, 16MnCr5, St50-2	060A35, 080M40, 4360-50B	1312, 1412, 1914	135, 30	G10100	P 1
1.3	EN 10 025 – E295	1.1191, 1.0601	CK45, C60	080M46, 080A62	1550, 2142, 2172	1024, 1060, 1061	G10600	P 2
1.4	EN 10 083-1 – 42 CrMo 4 - EN 10 270-2	1.7225, 1.3505, 1.6582, 1.3247	42CrMo4, 100Cr6, 34CrNiMo6, S2-10-1-8	708M40/42, 817M40, 534A99, BM2, BT42	1672-04, 2090, 2244-02, 2541-02	4140, A2, 4340, M42, M2	G41270, G41470, T30102, T11342	P 3
1.5	EN ISO 4957 – HS6-5-2 - EN-ISO 4957 – HS6-5-2-5	1.2510, 1.2713, 1.3247, 1.2080	100MnCrW12, 55NiCrMoV6, X210Cr12, S2-10-1-8	B01, BM2, BT42, 826 M40, 830M31	2244-04, 2541-03, 2550, 2722, 2723	01, L6, M42, D3, A2, M2, 4140, 8630	G86300, T30102' T11302, T30403, T11342	P 4
1.6	EN-ISO 4957 – HS2-9-1-8	1.2510, 1.2713, 1.3247, 1.2080	100MnCrW12, X210Cr12, S2-10-1-8	801, 826 M40, 830M31	2244-05, 2541-05, , HARDOX 400	01, L6, M42, D3, 4140, 8130	T30403, G41400, J14047	H 1
1.7	EN-ISO 4957 – HS2-9-1-8	1.2510	100MnCrW4	BO1, BD3, BH13	HARDOX 500			H 3
1.8	EN-ISO 4957 – X40CrMoV5-1	1.3343, 1.2344	S6-5-2, GX40CrMoV5-1	BM2, BH13	2242 HARDOX 600			H 4
2.1	EN 10 088-3 – X14CrMoS17	1.4305, 1.4104	X10CrNiS189, X12CrMoS17	303 S21 , 416 S37	2301, 2312, 2314, 2346, 2380	303, 416, 430F	S30300, S41600, S43020	M 1
2.2.	EN 10 088-2,0 -3 – 1.4301+AT	1.4301, 1.4541, 1.4571	X5CrNi189 X10CrNiMoTi1810	304 S15, 321 S17, 316 S, 320 S12	2310, 2333, 2337, 2343, 2353, 2377	304, 321, 316	S30400, S32100, S31600	M 3
2.3	EN 10 088-3 – 1.4460	1.4460, 1.4512, 1.4582	XBCrNiMo275, X4CrNiMoN6257	317 S16, 316 S16	2324, 2387, 2570	409, 430, 436	S40900, S4300, S43600	M 2
2.4	EN 1.4547	1.4547	X2CrNiMo20-18-6	HR41	2378	17-4PH	S31254	S 2
3.1	EN 1561 – EN-JL1030	0.6010, 0.6040	GG10, GG40	Grade150, Grade 400	0120, 0212, 0814	ASTM A48 class 20	F11401, F12801	K 1
3.2	EN 1561 – EN-JL1050	0.6025, 0.6040	GG25, GG40	Grade200, Grade 400	0125, 0130, 0140, 0217	ASTM A48 class 40, STM A48 class 60	F12801, F14101	K 2
3.3	EN 1561 – EN-JL2040	0.7040, 0.7070, 0.8145, 0.8045	GGG40, GGG70, GTS45-06, GTW45-07	420/12, P440/7, 700/2, 30g/72	0219, 0717, 0727, 0732, 0852	ASTM A220 grade 40010, ASTM A602 grade M4504	F22830, F20001	K 3
3.4	EN 1561 – EN-JL2050	0.7040, 0.7070, 0.8145, 0.8045	GGG40, GGG70, GTS45-06, GTW45-07	420/12, P440/7, 700/2, 30g/72	0221, 0223, 0737, 0854	ASTM A220 grade 90001, ASTM A602 grade M8501	F26230, 20005	K 4
4.1		3.7024LN	Ti99,8	TA1 to 9	Ti99,8	ASTM B265 grade 1	R50250	S 1
4.2		3.7164LN, 3.7119LN	TiAl6V4, TiAl55n2	TA10 to 14, TA17	TiAl6V4, TiAl5Sn2	AMS4928	R54790	S 2
4.3		3.7164LN, 3.7174LN, 3.7184LN	TiAl6V4, TiAl6V5Sn2, TiAl4MoSn2	TA10 to 13, TA28	TiAl6V5Sn2	AMS4928, AMS4971	R56400, R54790	S 3
5.1		2.4060, 2.4066	Nickel 200, 270, Ni99,6	NA 11, NA12	Ni200, Ni270	Nickel 200, Nickel 230	N02200, N02230	S 1
5.2		2.4630LN, 2.4602, 2.4650LN	Nimonic 75, Monel 400, Hastelloy C, Inconel 600	HR203, 3027-76		Nimonic 75,Monel400, Hastelloy, Inconel600	N06075, N10002, N04400, N06600	S 2
5.3		2.4668LN, 2.4631LN, 2.6554LN	Inconel 718, Nimonic 80A, Waspaloy	HR8, HR401, 601		Inconel 718, 625, Nimonic 80	N07718, N07080, N06625	S 3
6.1	EN 1652 – CW004A	2.0060, 2.0070	E-Cu57, SE-Cu	C101	5010	101	C10100, C1020	N 3
6.2	EN 1652 – CW612N	2.0380, 2.0360, 2.1030, 2.1080	CuZn39Pb2, CuZn40, CuSn8, CuSn6Zn	CZ120, CZ109,PB104	5168		C28000, C37710	N 4
6.3	EN 1652 – CW508L	2.0321, 2.0260	CuZn37, CuZn28	CZ108,CZ106	5150		C2600, C27200	N 3
6.4			Ampco 18, Ampco 25	AB1 type	5238, JM7-20			N 4
7.1	EN 485-2 – EN AW-1070A	3.0255	Al99,5	LMO, 1 B (1050A)	4005	EC, 1060, 1100	A91060, A91100	N 1
7.2	EN 755-2 – EN AW-5005	3.1355, 3.3525	AlCuMg2, AlMg2Mn0,8	LM5, 10, 12, N4 (5251)	4106, 4212	380, 520.0, 520.2, 2024, 6061	A03800, A05200, A92024	N 1
7.3	EN 1706 – EN AC-42000	3.2162.05, 3.2341.01	GD-AlSi8Cu, G-AlSi5Mg	LM2,4,16,18,21,22,, 24,25,26,27,L109	4244	319.0, 333.0, 319.1, 356.0	A03190, A03330, C35600	N 1
7.4	SS-EN 1706 – EN AC-47000	3.2581.01	G-AlSi18, G-AlSi12	LM6, 12,13, 20, 28, 29, 30	4260, 4261, 4262	4032, 222.1, A332.0	A94032, A02220, A13320	N 2
8.1				Polystyrene, Nylon, PVC Cellulose, Acetate & Nitrate		Polystyrene, Nylon, PVC		O
8.2				Ebonite, Tufnol, Bakelite		Bakelite		O
8.3				Kevlar, Printed Circuit boards		Kevlar		O
9,1				Ferrotic, Ferrotitanit				H
10.1				Graphite				O

Table of Cutting Speeds

DORMER

Vc																	
m/Min		5	8	10	15	20	25	30	40	50	60	70	80	90	100	110	150
Feet/Min		16	26	32	50	66	82	98	130	165	197	230	262	296	330	362	495
Ø		RPM															
mm	inch																
1,00		1592	2546	3183	4775	6366	7958	9549	12732	15916	19099	22282	25465	28648	31831	35014	47747
1,50		1061	1698	2122	3183	4244	5305	6366	8488	10610	12732	14854	16977	19099	21221	23343	31831
2,00		796	1273	1592	2387	3183	3979	4775	6366	7958	9549	11141	12732	14324	15916	17507	23873
2,50		637	1019	1273	1910	2546	3183	3820	5093	6366	7639	8913	10186	11459	12732	14006	19099
3,00		531	849	1061	1592	2122	2653	3183	4244	5305	6366	7427	8488	9549	10610	11671	15916
3,18	1/8	500	801	1001	1501	2002	2502	3003	4004	5005	6006	7007	8008	9009	10010	11011	15015
3,50		455	728	909	1364	1819	2274	2728	3638	4547	5457	6366	7276	8185	9095	10004	13642
4,00		398	637	796	1194	1592	1989	2387	3183	3979	4775	5570	6366	7162	7958	8754	11937
4,50		354	566	707	1061	1415	1768	2122	2829	3537	4244	4951	5659	6366	7074	7781	10610
4,76	3/16	334	535	669	1003	1337	1672	2006	2675	3344	4012	4681	5350	6018	6687	7356	10031
5,00		318	509	637	955	1273	1592	1910	2546	3183	3820	4456	5093	5730	6366	7003	9549
6,00		265	424	531	796	1061	1326	1592	2122	2653	3183	3714	4244	4775	5305	5836	7958
6,35	1/4	251	401	501	752	1003	1253	1504	2005	2506	3008	3509	4010	4511	5013	5514	7519
7,00		227	364	455	682	909	1137	1364	1819	2274	2728	3183	3638	4093	4547	5002	6821
7,94	5/16	200	321	401	601	802	1002	1203	1604	2004	2405	2806	3207	3608	4009	4410	6013
8,00		199	318	398	597	796	995	1194	1592	1989	2387	2785	3183	3581	3979	4377	5968
9,00		177	283	354	531	707	884	1061	1415	1768	2122	2476	2829	3183	3537	3890	5305
9,53	3/8	167	267	334	501	668	835	1002	1336	1670	2004	2338	2672	3006	3340	3674	5010
10,00		159	255	318	477	637	796	955	1273	1592	1910	2228	2546	2865	3183	3501	4775
11,11	7/16	143	229	287	430	573	716	860	1146	1433	1719	2006	2292	2579	2865	3152	4298
12,00		133	212	265	398	531	663	796	1061	1326	1592	1857	2122	2387	2653	2918	3979
12,70	1/2	125	201	251	376	501	627	752	1003	1253	1504	1754	2005	2256	2506	2757	3760
14,00		114	182	227	341	455	568	682	909	1137	1364	1592	1819	2046	2274	2501	3410
14,29	9/16	111	178	223	334	446	557	668	891	1114	1337	1559	1782	2005	2228	2450	3341
15,00		106	170	212	318	424	531	637	849	1061	1273	1485	1698	1910	2122	2334	3183
15,88	5/8	100	160	200	301	401	501	601	802	1002	1203	1403	1604	1804	2004	2205	3007
16,00		99	159	199	298	398	497	597	796	995	1194	1393	1592	1790	1989	2188	2984
17,46	11/16	91	146	182	273	365	456	547	729	912	1094	1276	1458	1641	1823	2005	2735
18,00		88	141	177	265	354	442	531	707	884	1061	1238	1415	1592	1768	1945	2653
19,05	3/4	84	134	167	251	334	418	501	668	835	1003	1170	1337	1504	1671	1838	2506
20,00		80	127	159	239	318	398	477	637	796	955	1114	1273	1432	1592	1751	2387
24,00		66	106	133	199	265	332	398	531	663	796	928	1061	1194	1326	1459	1989
25,00		64	102	127	191	255	318	382	509	637	764	891	1019	1146	1273	1401	1910
27,00		59	94	118	177	236	295	354	472	589	707	825	943	1061	1179	1297	1768
30,00		53	85	106	159	212	265	318	424	531	637	743	849	955	1061	1167	1592
32,00		50	80	99	149	199	249	298	398	497	597	696	796	895	995	1094	1492
36,00		44	71	88	133	177	221	265	354	442	531	619	707	796	884	973	1326
40,00		40	64	80	119	159	199	239	318	398	477	557	637	716	796	875	1194
50,00		32	51	64	95	127	159	191	255	318	382	446	509	573	637	700	955

Hardness and Tensile Strength

HV Vickers	HRC Rockwell	HB Brinell	N/ mm²	Tons/ sq. in.
940	68			
900	67			
864	66			
829	65			
800	64			
773	63			
745	62			
720	61			
698	60			
675	59			
655	58		2200	142
650		618	2180	141
640		608	2145	139
639	57	607	2140	138
630		599	2105	136
620		589	2070	134
615	56	584	2050	133
610		580	2030	131
600		570	1995	129
596	55	567	1980	128
590		561	1955	126
580		551	1920	124
578	54	549	1910	124
570		542	1880	122
560	53	532	1845	119
550		523	1810	117
544	52	517	1790	116
540		513	1775	115
530		504	1740	113
527	51	501	1730	112
520		494	1700	110
514	50	488	1680	109
510		485	1665	108
500		475	1630	105
497	49	472	1620	105
490		466	1595	103
484	48	460	1570	102
480		456	1555	101
473	47	449	1530	99
470		447	1520	98
460		437	1485	96
458	46	435	1480	96
450		428	1455	94
446	45	424	1440	93
440		418	1420	92

HV Vickers	HRC Rockwell	HB Brinell	N/ mm²	Tons/ sq. in.
434	44	413	1400	91
423	43	402	1360	88
413	42	393	1330	86
403	41	383	1300	84
392	40	372	1260	82
382	39	363	1230	80
373	38	354	1200	78
364	37	346	1170	76
355	36	337	1140	74
350		333	1125	73
345	35	328	1110	72
340		323	1095	71
336	34	319	1080	70
330		314	1060	69
327	33	311	1050	68
320		304	1030	67
317	32	301	1020	66
310	31	295	995	64
302	30	287	970	63
300		285	965	62
295		280	950	61
293	29	278	940	61
290		276	930	60
287	28	273	920	60
285		271	915	59
280	27	266	900	58
275		261	880	57
272	26	258	870	56
270		257	865	56
268	25	255	860	56
265		252	850	55
260	24	247	835	54
255	23	242	820	53
250	22	238	800	52
245		233	785	51
243	21	231	780	50
240		228	770	50
235		223	755	49
230		219	740	48
225		214	720	47
220		209	705	46
215		204	690	45
210		199	675	44
205		195	660	43
200		190	640	41

Tolerances

	Ø mm							
	> 1 ≤ 3	> 3 ≤ 6	> 6 ≤ 10	> 10 ≤ 18	> 18 ≤ 30	> 30 ≤ 50	> 50 ≤ 80	> 80 ≤ 120
Tol	µm							
e8	-14 / -28	-20 / -38	-25 / -47	-32 / -59	-40 / -73	-50 / -89	-60 / -106	-72 / -126
f6	-6 / -12	-10 / -18	-13 / -22	-16 / -27	-20 / -33	-25 / -41	-30 / -49	- 36 / -58
f7	-6 / -16	-10 / -22	-13 / -28	-16 / -34	-20 / -41	-25 / -50	-30 / -60	-36 / -71
h6	0 / -6	0 / -8	0 / -9	0 / -11	0 / -13	0 / -16	0 / -19	0 / -22
h7	0 / -10	0 / -12	0 / -15	0 / -18	0 / -21	0 / -25	0 / -30	0 / -35
h8	0 / -14	0 / -18	0 / -22	0 / -27	0 / -33	0 / -39	0 / -46	0 / -54
h9	0 / -25	0 / -30	0 / -36	0 / -43	0 / -52	0 / -62	0 / -74	0 / -87
h10	0 / -40	0 / -48	0 / -58	0 / -70	0 / -84	0 / -100	0 / -120	0 / -140
h11	0 / -60	0 / -75	0 / -90	0 / -110	0 / -130	0 / -160	0 / -190	0 / -220
h12	0 / -100	0 / -120	0 / -150	0 / -180	0 / -210	0 / -250	0 / -300	0 / -350
k10	+40 / 0	+48 / 0	+58 / 0	+70 / 0	+84 / 0	+100 / 0	+120 / 0	+140 / 0
k12	+100 / 0	+120 / 0	+150 / 0	+180 / 0	+210 / 0	+250 / 0	+300 / 0	+350 / 0
m7	+2 / +12	+4 / +16	+6 / +21	+7 / +25	+8 / +29	+9 / +34	+11 / +41	+13 / +48
js14	+/- 125	+/- 150	+/- 180	+/- 215	+/- 260	+/- 310	+/- 370	+/- 435
js16	+/- 300	+/- 375	+/- 450	+/- 550	+/- 650	+/- 800	+/- 950	+/- 1100
H7	+10 / 0	+12 / 0	+15 / 0	+18 / 0	+21 / 0	+25 / 0	+30 / 0	+35 / 0
H8	+14 / 0	+18 / 0	+22 / 0	+27 / 0	+ 33 / 0	+39 / 0	+46 / 0	+54 / 0

1µm = 0.001mm

DRILLING

GENERAL HINTS ON DRILLING

1. Select the most appropriate drill for the application, bearing in mind the material to be machined, the capability of the machine tool and the coolant to be used.
2. Flexibility within the component and machine tool spindle can cause damage to the drill as well as the component and machine - ensure maximum stability at all times. This can be improved by selecting the shortest possible drill for the application.
3. Tool holding is an important aspect of the drilling operation and the drill cannot be allowed to slip or move in the tool holder.
4. The correct use of Morse Taper Shank drills relies on an efficient fit between the taper surfaces of the tool and the tool holder. The use of a soft-faced hammer should be used to drive the drill into the holder.
5. The use of suitable coolants and lubricants are recommended as required by the particular drilling operation. When using coolants and lubricants, ensure a copious supply, especially at the drill point.
6. Swarf evacuation whilst drilling is essential in ensuring the correct drilling procedure. Never allow the swarf to become stationary in the flute
7. When regrinding a drill, always make sure that the correct point geometry is produced and that any wear has been removed.

HOLE SIZE

As geometric, substrate and coating configurations become more advanced, the ability of a drill to produce a more accurate hole size increases. In general, a standard geometry tool will achieve a hole size to H12. However as the configuration of the drill becomes more complex the achievable hole size, under favourable conditions, can be as good as H8. To offer a better insight, listed below are the product types and their achievable hole tolerances:

- HSS General Purpose drills – H12
- HSS / HSS-E Parabolic Flute Deep Hole Drills – H10
- Solid Carbide High Performance coated – H8/H9

DEEP HOLE DRILLING STRATEGY

When drilling deep holes, several methods can be adopted to achieve the depth required. The example below shows four ways of drilling a hole with 10 x the diameter of the drill.

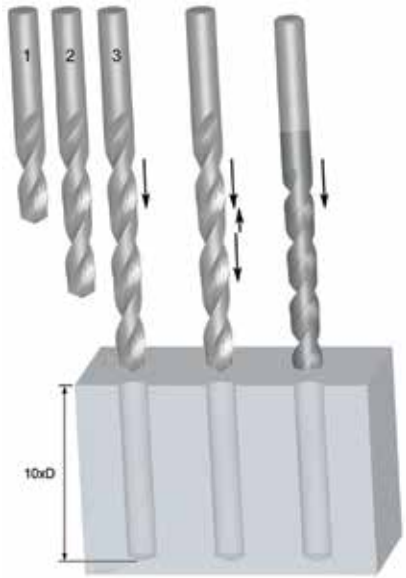

	Series Drilling	Series Drilling
No of drills	3 (2,5xD, 6xD,10xD)	2 (2,5xD,10xD)
Type of drill	Standard geometry, general purpose	Standard geometry, general purpose
+ / -	Expensive Time consuming	More cost effective Quick

	Peck Drilling	Single Pass Drilling
No of drills	1 (10xD)	1 (10xD)
Type of drill	Standard geometry, general purpose	Purpose specific tool
+ / -	Time consuming	Cost effective Fast

TROUBLE SHOOTING WHEN DRILLING

PROBLEM	CAUSE	REMEDY
Broken or twisted tangs	Bad fit between shank and socke	Ensure the shank and socket are clean and free from damage
Splitting of the web	Feed too high	Reduce feed to optimum rate
	Insufficient initial clearanc	Regrind to correct specificatio
	Excessive web thinning	Regrind to correct specificatio
	Heavy impact at point of drill	Avoid impact at the point of drill. Take care with taper shank drills when inserting/ejecting from spindle
Worn outer corner	Excessive speed	Reduce speed to optimum - may be able to increase feed
Broken outer corners	Unstable component set up	Reduce movement in the component
Chipped cutting lips	Excessive initial clearance	Regrind to correct specificatio
Breakage at flute run ou	Choking of flute	Adopt a peck/series drilling concept
	Drill slipping	Ensure the drill is held securely in the chuck and spindle
Spiral finish in hol	Insufficient fee	Increase feed
	Bad positional accuracy	Use a spot drill before drilling
Hole size too large	Incorrect point geometry	Check point geometry
	Ineffective swarf clearance	Adjust speed, feed and peck length to achieve more manageable swarf

REAMING

GENERAL HINTS ON REAMING

To obtain the best results when using reamers it is essential to make them 'work'. It is a common fault to prepare holes for reaming with too little stock left in. If insufficient stock is left in the hole before reaming, then the reamer will rub, quickly show wear and will result in loss of diameter. It is equally important for performance not to leave too much stock in the hole. (See Stock Removal below).

1. Select the optimum type of reamer and the optimum speeds and feeds for the application. Ensure that pre-drilled holes are the correct diameter.

2. The workpiece must be held rigid and the machine spindle should have no play.

3. The chuck in which a straight shank reamer is held must be good quality. If the reamer slips in the chuck and the feed is automatic, breakage of the reamer may occur.

4. Keep tool overhang from machine spindle to a minimum.

5. Use recommended lubricants to enhance the life of the reamer and ensure the fluid reaches the cutting edges. As reaming is not a heavy cutting operation, soluble oil 40:1 dilution is normally satisfactory. Air blasting may be used with grey cast iron, if dry machining.

6. Do not allow the flutes of a reamer to become blocked with swarf.

7. Before the reamer is reground, check concentricity between centres. In most instances only the bevel lead will need regrinding.

8. Keep reamers sharp. Frequent regrinding is good economy, but it is important to understand that reamers cut only on the bevel and taper leads and not on the lands. Consequently only these leads need regrinding. Accuracy of regrinding is important to hole quality and tool life.

STOCK REMOVAL

The recommended stock removal in reaming is dependent on the application material and the surface finish of the pre drilled hole. General guidelines for stock removal are shown in the following tables:

Size of reamed hole (mm)	When pre-drilled	When pre-core-drilled
Below 4	0.1	0.1
Over 4 to 11	0.2	0.15
Over 11 to 39	0.3	0.2
Over 39 to 50	0.4	0.3

Size of reamed hole (inches)	When pre-drilled	When pre-core-drilled
Below 3/16	0.004	0.004
3/16 to ½	0.008	0.006
½ to 1.½	0.010	0.008
1.½ to 2	0.016	0.010

TOLERANCE LIMITS

1. ON THE CUTTING DIAMETER OF STANDARD REAMERS
   The diameter (d_1) is measured across the circular land immediately behind the bevel or taper lead. The tolerance is in accordance with DIN 1420 and is intended to produce H7 holes.

REAMER TOLERANCE			
Diameter (mm)		Tolerance Limit (mm)	
Over	Up to and including	High +	Low +
	3	0.008	0.004
3	6	0.010	0.005
6	10	0.012	0.006
10	18	0.015	0.008

REAMER TOLERANCE			
Diameter (mm)		Tolerance Limit (mm)	
Over	Up to and including	High +	Low +
18	30	0.017	0.009
30	50	0.021	0.012
50	80	0.025	0.014

2. ON A H7 HOLE
   The most common tolerance on a finished hole is H7 (see table below). For any other tolerance the figure and table beneath point 3 can be used to calculate the reamers tolerance location and width.

HOLE TOLERANCE			
Diameter (mm)		Tolerance Limit (mm)	
Over	Up to and including	High +	Low +
	3	0.010	0
3	6	0.012	0
6	10	0.015	0
10	18	0.018	0

HOLE TOLERANCE			
Diameter (mm)		Tolerance Limit (mm)	
Over	Up to and including	High +	Low +
18	30	0.021	0
30	50	0.025	0
50	80	0.030	0

3. When it is necessary to define the dimensions of a special reamer intended to cut to a specific tolerance, e.g. D8 this well proven guide can be used.

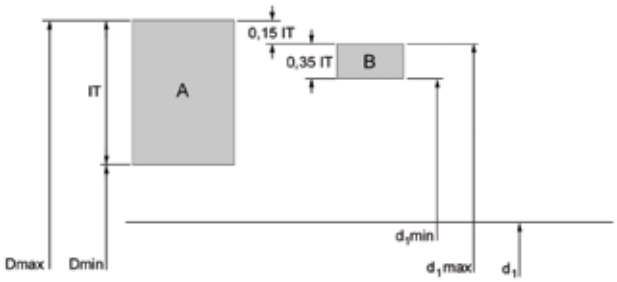

A = Hole Tolerance
B = Reamer Tolerance
IT = Tolerance Width
Dmax = Max Diameter of Hole
Dmin = Min Diameter of Hole
d_1 = Nominal Diameter
$d_1$max = Max Diameter of Reamer
$d_1$min = Min Diameter of Reamer

Tolerance width (microns)	Diameter Tolerance Width (mm)							
	over 1 incl. 3	over 3 incl. 6	over 6 incl. 10	over 10 incl. 18	over 18 incl. 30	over 30 incl. 50	over 50 incl. 80	over 80 incl. 120
IT5	4	5	6	8	9	11	13	15
IT6	6	8	9	11	13	16	19	22
IT7	10	12	15	18	21	25	30	35
IT8	14	18	22	27	33	39	46	54
IT9	25	30	36	43	52	62	74	87
IT10	40	48	58	70	84	100	120	140
IT11	60	75	90	110	130	160	190	220
IT12	100	120	150	180	210	250	300	350

e.g. 10mm hole with tolerance D8, Max dia = 10.062, Min dia = 10.040, Hole tol (IT8) = 0.022

Maximum limit: 0.15 x hole tolerance (IT8) = 0.0033, rounded up = 0.004
Minimum limit: 0.35 x hole tolerance (IT8) = 0.0077, rounded up = 0.008

Maximum limit for reamer = 10.062 - 0.004 = 10.058
Minimum limit for reamer = 10.058 - 0.008 = 10.050

TROUBLE SHOOTING WHEN REAMING

PROBLEM	CAUSE	REMEDY
Broken or twisted tangs	Incorrect fit between shank and socke	Ensure the shank and socket are clean and free from damage
Rapid tool wear	Insufficient stock to remov	Increase the amount of stock to be removed
Oversize hole	Excessive lip height variation	Regrind to correct specificatio
	Displacement in the machine spindle	Repair and rectify spindle displacement
	Deflects on the tool holde	Replace tool holder
	Tool shank is damaged	Replace or regrind the shank
	Ovality of the tool	Replace or regrind the tool
	Asymmetric bevel lead angle	Regrind to correct specificatio
	Too high feed or cutting speed	Adjust cutting conditions in accordance with Catalogue
Undersize hole	Insufficient stock to remov	Increase the amount of stock to be removed
	Too much heat generated while reaming. The hole widens and shrinks	Increase coolant flo
	The tool diameter is worn and is undersize	Regrind to correct specificatio
	Too low feed or cutting speed	Adjust cutting conditions in accordance with the Catalogue
	Pre-drilled hole is too small	Decrease the amount of stock to be removed
Oval and conical holes	Displacement in the machine spindle	Repair and rectify spindle displacement
	Misalignment between tool and hole	Use a bridge reamer
	Asymmetric bevel lead angle	Regrind to correct specificatio
Bad hole finis	Excessive stock to remove	Decrease the amount of stock to be removed
	Worn out tool	Regind to correct specificatio
	Too small cutting rake angle	Regind to correct specificatio
	Too diluted emulsion or cutting oil	Increase % concentration
	Feed and/or speed too low	Adjust cutting conditions in accordance with Catalogue
	Cutting speed too high	Adjust cutting conditions in accordance with Catalogue
The tool clamps and breaks	Worn out tool	Regind to correct specificatio
	Back taper of the tool is too small	Check and replace/modify the tool
	The width of the land is too wide	Check and replace/modify the tool
	Workpiece material tend to squeeze	Use an adjustable reamer to compensate for the displacement
	Pre-drilled hole is too small	Decrease the amount of stock to be removed
	Heterogeneous material with hard inclusions	Use solid carbide reamer

THREAD MILLING

GENERAL HINTS ON THREAD MILLING

1. Thread milling is the process of generating a thread by the circular interpolation of a milling cutter with a specific thread geometry ground around it's periphery.

2. To be able to use a thread milling cutter it is necessary to have a CNC machine that can make circular paths.

3. Most modern CNC machines are equipped with machining cycles for thread milling

4. Consult the manual or contact the machine supplier for information

FEATURES AND BENEFITS

1. Thread milling gives increased reliability and tool life

2. Threadmills produce small chips resulting in problem free threading

3. Tolerance adjustments can be made using exact co-ordinates

4. You can generate a fuller thread to the bottom of the hole

5. Capable of machining a wide variety of materials

6. The same cutter can produce different size threads provided the pitch is the same

7. Both right and left hand threads can be created with the same tool

8. Some thread mills can also machine the entry chamfer (J200, J205, J260)

CHOOSING YOUR TOOL

Thread milling cutters have an item code based on the type, diameter (d_1) and pitch (P)

The item code is the number to use when ordering your tool

Always consult the catalogue to ensure you have the correct thread dimensions

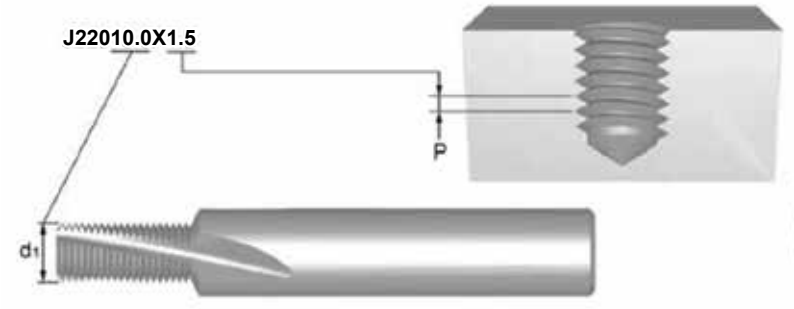

This thread milling cutter can be used for threads ≥ M12x1.5 (M14x1.5, M18x1.5 etc)

PROGRAMMING WITH Rprg

- For easy adjustment of the thread tolerance always program with radius correction
- The Rprg value is the start value for a new cutter and is printed on the cutter shank. This should be entered in the tool memory offset
- Rprg is based on the theoretical zero-line of the thread meaning that when you program using Rprg the thread is never oversize, but normally tight
- This means that with a small modification to the program co-ordinates you can create the thread to the required size

RECOMMENDATIONS

- Always use the correct cutting data (refer to the cutting data chart on page 198)
- Use the recommended drill size for the thread diameter, as for conventional taps
- For easy adjustment of the thread tolerance always start with the Rprg value printed on the shank of the threadmill
- Use a gauge to check the tolerance on the first thread to establish if the radius needs to be corrected. The radius can be corrected 2 or 3 times before the threadmill is worn out
- When dry machining, compressed air is recommended to help with swarf removal
- When threading more difficult materials, it is recommended to take 2 or 3 passe

THREADING

GENERAL HINTS ON TAPPING

The success of any tapping operation depends on a number of factors, all of which affect the quality of the finished product.

1. Select the correct design of tap for the component material and type of hole, i.e. through or blind, from the Materials Classification chart
2. Ensure the component is securely clamped - lateral movement may cause tap breakage or poor quality threads.
3. Select the correct size of drill from the relevant catalogue page. Always ensure that work hardening of the component material is kept to a minimum.
4. Select the correct cutting speed as shown on the catalogue product page.
5. Use appropriate cutting fluid for correct application
6. In NC applications ensure that the feed value chosen for the program is correct. When using a tapping attachment, 95% to 97% of the pitch is recommended to allow the tap to generate its own pitch.
7. Where possible, hold the tap in a good quality torque limiting tapping attachment, which ensures free axial movement of the tap and presents it squarely to the hole. It also protects the tap from breakage if accidentally 'bottomed' in a blind hole.
8. Ensure smooth entry of the tap into the hole, as an uneven feed may cause 'bell mouthing'.

TAP TOLERANCE VS TOLERANCE ON INTERNAL THREAD (NUT)

Tolerance class, Tap			Tolerance, Internal thread (Nut)					Application
ISO	DIN	ANSI BS						
ISO 1	4 H	3 B	4 H	5 H				Fit without allowance
ISO 2	6 H	2 B	4 G	5 G	6 H			Normal fit
ISO 3	6 G	1 B			6 G	7 H	8 H	Fit with large allowance
-	7 G	-				7 G	8 G	Loose fit for following treatment or coating

TROUBLE SHOOTING WHEN TAPPING

PROBLEM	CAUSE	REMEDY
Oversize	Incorrect tolerance	Choose a tap with lower thread tolerance
	Incorrect axial feed rate	Reduce feed rate by 5-10% or increase compression of tap holder
	Wrong type of tap for application	Use spiral point for through hole or spiral flute for blind hole. Use coated tool to prevent built up edge. Check Catalogue or Product Selector for correct tool alternative
	Tap not centered on the hole	Check tap holder and position tap centre on the hole
	Lack of lubrication	Use good lubrication in order to prevent built up edge. See lubricant section in technical handbook
	Tap speed too slow	Follow recommendation in Catalogue / Product Selector
Undersize	Wrong type of tap for application	Use spiral point for through hole or spiral flute for blind hole. Use coated tool to prevent built up edge. Use tap with higher rake angle. Check Catalogue or Product Selector for correct tool alternative
	Incorrect tolerance	Choose a tap with higher tolerance, especially on material with low oversize tendency, such as cast iron, stainless steel
	Incorrect or lack of lubricant	Use good lubrication in order to prevent chip blockage inside the hole. See lubricant section in technical handbook
	Tap drill hole too small	Increase drill diameter to the maximum value. Check tapping size drill
	Material closing in after tapping	See recommendation in Catalogue / Product Selector for correct tool alternative
Chipping	Wrong type of tap for application	Choose a tap with lower rake angle. Choose a tap with longer chamfer. Use spiral point taps for through hole and spiral flute for blind holes, in order to avoid chip blockage. Check Catalogue or Product Selector for correct tool alternative
	Incorrect or lack of lubricant	Use good lubrication in order to prevent built up edge. See lubricant section in technical handbook
	Taps hit bottom of hole	Increase depth of drilling or decrease depth of tapping
	Work hardening surface	Reduce speed, use coated tool, use good lubrication. See section for machining of stainless steel in technical handbook
	Swarf trapping on reversal	Avoid sudden return of tap on reversal motion
	Chamfer hits hole entrance	Check axial position and reduce axial error of tap point on hole centre
	Tap drill hole too small	Increase drill diameter to maximum value. Check tapping size drill

TROUBLE SHOOTING WHEN TAPPING

PROBLEM	CAUSE	REMEDY
Breakage	Tap worn out	Use a new tap or regrind the old one
	Lack of lubricant	Use good lubrication in order to prevent built up edge and chip blockage. See lubricant section in technical handbook
	Taps hit bottom of hole	Increase depth of drilling or decrease depth of tapping
	Tap speed too high	Reduce cutting speed. Follow recommendation in Catalogue / Product Selector
	Work hardening surface	Reduce speed. Use coated tool Use good lubrication. See section for machining of stainless steel in technical handbook
	Tap drill hole too small	Increase drill diameter up to maximum value. See tap drill tables
	Too high torque	Use tapping attachment with torque adjustment clutch
	Material closing in after tapping	See recommendation in Catalogue / Product Selector for correct tool alternative
Rapid wear	Wrong type of tap for application	Use tap with lower rake angle and/or higher relief and/ or longer chamfer. Use coated tool. Check Catalogue or Product Selector for correct tool alternative
	Lack of lubricant	Use good lubrication in order to prevent built up edge and thermal stress on cutting edge. See lubricant section in technical handbook
	Tap speed too high	Reduce cutting speed. Follow recommendation in Catalogue / Product Selector
Built up edge	Wrong type of tap for application	Use tap with lower rake angle and/or higher relief. Check Catalogue or Product Selector for correct tool alternative
	Lack of lubricant	Use good lubrication in order to prevent built up edge. See lubricant section in technical handbook
	Surface treatment not suitable	Choose a tap with the recommended surface treatment
	Tap speed too low	Follow recommendation in Catalogue / Product Selector

MILLING

GENERAL HINTS ON MILLING

Milling is a process of generating machined surfaces by progressively removing a predetermined amount of material or stock from the workpiece at a relatively slow rate of movement or feed by a milling cutter rotating at a comparatively high speed.
The characteristic feature of the milling process is that each milling cutter tooth removes its share of the stock in the form of small individual chips

TYPE OF MILLING CUTTERS

The three basic milling operations are shown below: (A) peripheral milling, (B) face milling and (C) end milling.

A

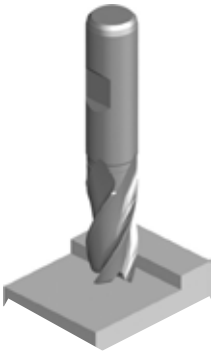

B

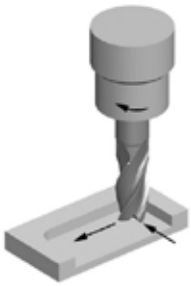

C

In peripheral milling (also called slab milling), the axis of cutter rotation is parallel to the workpiece surface to be machined. The cutter has a number of teeth along its circumference, each tooth acting like a single-point cutting tool called a plain mill. Cutters used in peripheral milling may have straight or helical teeth generating an orthogonal or oblique cutting action.

In face milling, the cutter is mounted on a spindle with an axis of rotation perpendicular to the workpiece surface. The milled surface results from the action of cutting edges located on the periphery and face of the cutter.

In end milling, the cutter generally rotates on an axis vertical to the workpiece. It can be tilted to machine tapered surfaces. Cutting teeth are located on both the end face of the cutter and the periphery of the cutter body.

DIFFERENT APPLICATIONS FOR END MILLS

The MRR and the applications are strongly related. For each different application we have a different MRR that increases with the engagement section of the cutter on the workpiece. The recent Dormer Catalogue was produced with simple icons that show the different applications.

Side Milling	Face Milling	Slot Milling	Plunge Milling	Ramping
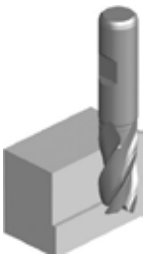		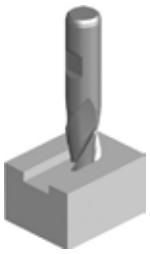	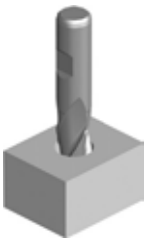	
The radial depth of cut should be less than 0.25 of the diameter of the end mill.	The radial depth of cut should be no more than 0.9 of the diameter, axial depth of cut less than 0.1 of the diameter.	Machining of a slot for keyways. The radial depth of cut is equal to the diameter on the end mill.	It is possible to drill the workpiece with an end mill only with the cutting centre. In this operation the feed has to be halved.	Both axial and radial entering into the workpiece.

TROUBLE SHOOTING WHEN MILLING

PROBLEM	CAUSE	REMEDY
Breakage	Too high stock removal	Decrease feed per tooth
	Feed too fast	Slow down feed
Wear	Flute length or overall length too long	Hold shank deeper, use shorter end mill
	Workpiece material too hard	Check Catalogue or Selector for correct tool with higher grade material and/or proper coating
	Improper feed and speed	Check Catalogue or Selector for correct cutting parameters
	Poor chip evacuation	Reposition coolant lines
	Conventional milling	Climb milling
	Improper cutter helix	See recommendation in Catalogue/Selector for correct tool alternative
Chipping	Feed rate too high	Reduce feed rate
	Chattering	Reduce the RPM
	Low cutting speed	Increase the RPM
	Conventional milling	Climb milling
	Tool rigidity	Choose a shorter tool and/or place shank further up holder
	Workpiece rigidity	Hold workpiece tightly
Short Tool Life	Tough work material	Check Catalogue or Selector for correct tool alternative
	Improper cutting angle and primary relief	Change to correct cutting angle
	Cutter/workpiece friction	Use coated tool
Bad Surface finish	Feed too fast	Slow down to correct speed
	Speed too slow	Increase the speed
	Chip biting	Decrease stock removal
	Tool wear	Replace or regrind the tool
	Edge build up	Change to higher helix tool
	Chip welding	Increase coolant quantity

GENERAL HINTS

PROBLEM	CAUSE	REMEDY
Workpiece inaccuracy	Tool deflection	Choose a shorter tool and/or place shank further up holder
	Insufficient number of flutes	Use a tool with more flutes
	Loose/worn tool holder	Repair or replace it
	Poor tool holder rigidity	Replace with shorter/more rigid tool holder
	Poor spindle rigidity	Use larger spindle
Chattering	Feed and speed too high	Correct feed and speed with the help of the Catalogue/ Selector
	Flute or overall length too long	Hold shank deeper and use shorter end mill
	Cutting too deep	Decrease depth of cut
	Not enough rigidity (machine and holder)	Check the tool holder and change it if necessary

CARBIDE BURRS

GENERAL HINTS ON CARBIDE BURRS

Carbide Burrs are widely used for preparing and finishing components in a wide range of materials

They are generally used by hand and mounted in air driven die-grinders

FEATURES AND BENEFITS

1. Toughened and hardened steel shanks improve rigidity and reduce the risk of bending or vibration
2. Accurately ground shanks improve holding and reduce likelihood of spinning
3. Special brazing elements prevent high temperature failure and also provide increased strength to withstand pressure and impact
4. The universal Double Cut geometry is suitable for a wide range of materials and applications
5. Material specific geometries are also available suited to Steel (ST), Stainless Steel (VA), Aluminium (AL) and Fibreglass (GRP)
6. Available with TiAlN coating to increase tool life in abrasive materials
7. Ball nose burrs are ground with Skip Flute geometry
8. This provides active geometry towards the centre of the burr, improving the cutting action and reducing the chances of swarf build up and clogging

Skip

Normal

SAFETY FIRST

1. High speed rotating tools are hazardous and can be dangerous if miss-used
2. Always disconnect the die grinder from the air supply before attempting to change the burrs
3. Check the condition of the die grinder and if possible use low vibration versions
4. Always use the appropriate protective equipment and ensure anyone working close by is also protected

Personal protective equipment must be worn at all times.

GENERAL HINTS

RECOMMENDATIONS

- Always use the appropriate speed rated die grinder (refer to the speed chart on page??)
- Routine maintenance of die grinders is important, ensure they are oiled and bearings are not worn
- Always clean the clamping nut, collet and internal taper of the die grinder when changing a burr
- Try to avoid mechanical shock and heavy impact of the burrs
- Try to avoid thermal shock by not allowing the burr to become overheated
- Don't plunge the burr too deep into the workpiece material or jam the bur into corners or channels

TROUBLE SHOOTING USING BURRS

PROBLEM	CAUSE
Chipping of Burr Teeth	Running too low rpm, can cause bouncing
	Eccentricity (worn spindle, collet or bearings)
	Plunging and jamming the burr into the workpiece
Clogging of Burr Teeth	Flute length or overall length too long
	Incorrect geometry choice for workpiece material
Premature Wear	Running too high rpm for size of burr and workpiece material
	Eccentricity (worn spindle, collet or bearings)
Head Detaches from Shank	Running too high rpm causing overheating
	Running for prolonged periods causing overheating

SIMPLY RELIABLE

作为你可以通过切屑判断工件质量的专业公司。该切屑是清洁和简单的形状这本身就在讲述了一个故事。这是一个清晰和一致的信号，这就是为什么我们使用它作为简洁可靠的符号。

Como profissional você pode julgar a qualidade do trabalho apenas olhando para o cavaco. O cavaco é uma forma limpa e simples que, por si só, conta uma história. É um sinal claro e consistente e é por isso que podemos usá-lo como um símbolo para ser **simplesmente confiável**.

Como profesional se puede juzgar la calidad del trabajo sólo mirarando la viruta. La viruta es una forma limpia y sin complicaciones, que en sí misma cuenta una historia. Es una señal clara y consistente y es por eso que la usamos como un símbolo por ser **simplemente fiables**.

As a professional you can judge the quality of work by just looking at the chip. Our chip is a clean and uncomplicated shape that in itself tells a story. It is a clear and consistent signal and that's why we use it as a symbol for being **simply reliable**.

Argentina
T: 54 (11) 6777-6777
F: 54 (11) 4441-4467
info.ar@dormerpramet.com

Australia
T: 1300 131 274
F: 1300 809 510
info.au@dormerpramet.com

Austria
T: +31 10 2080 240
F: +31 10 2080 282
info.at@dormerpramet.com

Belgium & Luxembourg
T: +32 3 440 59 01
F: +32 3 449 15 43
info.be@dormerpramet.com

Brazil
T: +55 11 5660 3000
F: +55 11 5667 5883
info.br@dormerpramet.com

Canada
T: (888) 336 7637
En Français: (888) 368 8457
F: (905) 542 7000
cs.canada@dormerpramet.com

China
T: +86 21 2416 0508
F: +86 21 5442 6315
info.cn@dormerpramet.com

Croatia
T: +385 98 407 489
info.hr@dormerpramet.com

Czech Republic
T: +420 583 381 111
F: +420 583 215 401
info.cz@dormerpramet.com

Denmark
T: 808 82106
F: +46 35 16 52 90
info.se@dormerpramet.com

Finland
T: 0205 44 7003
F: 0205 44 7004
info.fi@dormerpramet.com

France
T: +33 (0)2 47 62 57 01
F: +33 (0)2 47 62 52 00
info.fr@dormerpramet.com

Germany
T: +49 9131 933 08 70
F: +49 9131 933 08 742
info.de@dormerpramet.com

Hungary
T: +36-96 / 522-846
F: +36-96 / 522-847
info.hu@dormerpramet.com

India
T: +91 11 4601 5686
info.in@dormerpramet.com

Italy
T: +39 02 38 04 51
F: +39 02 38 04 52 43
info.it@dormerpramet.com

Kazakhstan
T: +7 771 305 11 45
info.kz@dormerpramet.com

Mexico
T: +52 (555) 7293981
F: +52 (555) 7293981
cs.mexico@dormerpramet.com

Netherlands
T: +31 10 2080 240
F: +31 10 2080 282
info.nl@dormerpramet.com

New Zealand
T: 0800 800 922
info.int@dormerpramet.com

Norway
T: 800 10 113
F: +46 35 16 52 90
info.se@dormerpramet.com

Poland
T: +48 32 78-15-890
F: +48 32 78-60-406
info.pl@dormerpramet.com

Portugal
T: +351 21 424 54 21
F: +351 21 424 54 25
info.pt@dormerpramet.com

Romania
T: +4(0)730 015 885
info.ro@dormerpramet.com

Russia
T: +7 495 775 10 28
Ф: +7 (499) 763 38 90
info.ru@dormerpramet.com

Slovakia
T: +421 (41) 764 54 60
F: +421 (41) 763 74 49
info.sk@dormerpramet.com

Slovenia
T: +385 98 407 489
info.si@dormerpramet.com

Spain
T: +34 935717722
F: +34 935717765
info.es@dormerpramet.com

Sweden
responsible for **Iceland**
T: +46 35 16 52 96
F: +46 35 16 52 90
info.se@dormerpramet.com

Switzerland
T: +31 10 2080 240
F: +31 10 2080 282
info.ch@dormerpramet.com

Turkey
T: +90 533 212 45 47
info.tr@dormerpramet.com

Ukraine
T: +38 056 736 30 21
F: +38 067 220 97 48
info.ua@dormerpramet.com

United Kingdom
responsible for **Ireland**
T: 0870 850 4466
F: 0870 850 8866
info.uk@dormerpramet.com

United States of America
T: (800) 877-3745
F: (847) 783-5760
cs@dormerpramet.com

Other countries

South America
T: +55 11 5660 3000
F: +55 11 5667 5883
info.br@dormerpramet.com

Central and Eastern Europe
T: +420 583 381 526
F: +420 583 381 401
info.rcee@dormerpramet.com

Rest of the World
Dormer Pramet International UK
T: +44 1246 571338
F: +44 1246 571339
info.int@dormerpramet.com

Dormer Pramet International CZ
T: +420 583 381 520
F: +420 583 215 401
info.int.cz@dormerpramet.com

ZZZUDORCAT2018CZRUPLSK

DORMER PRAMET

www.dormerpramet.com
youtube.com/dormerpramet
facebook.com/dormerprametsocial
linkedin.com/company/dormer-pramet
twitter.com/dormerpramet